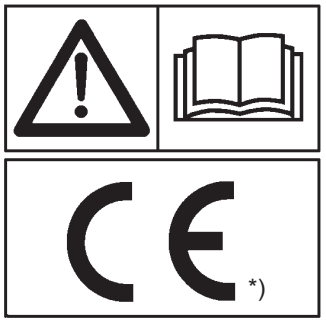

MASCHIO Fienagione S.p.A.

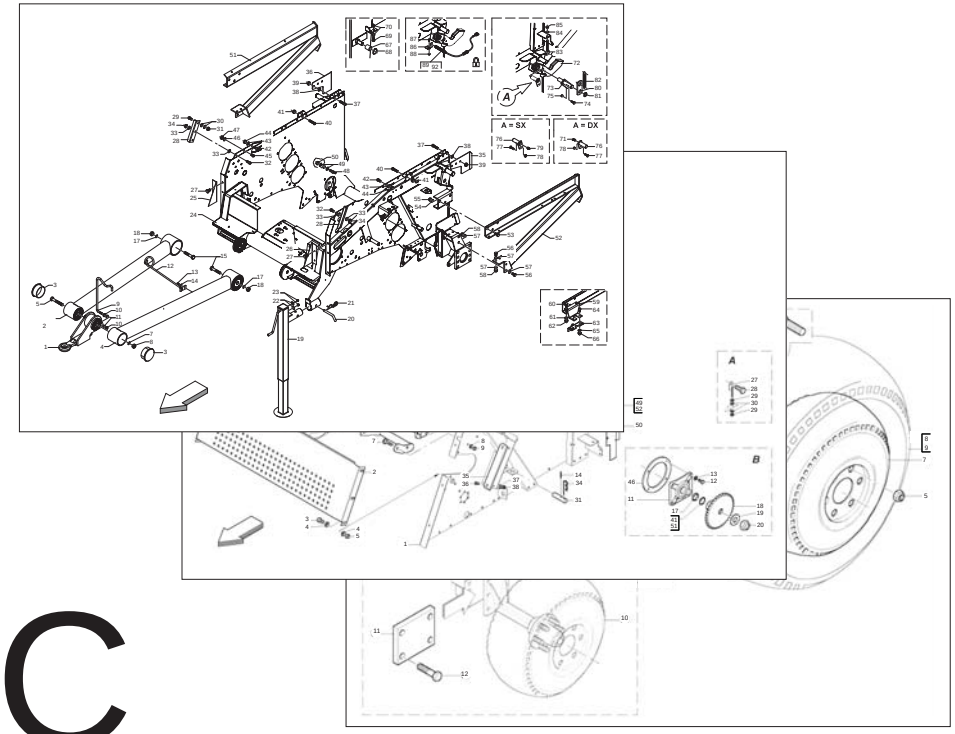

EXTREME 265 LTI-LTC

Cod: B0D5P0108 2011-01

*) Valido per Paesi UE
*) Valid for EU member countries
*) Valable dans les Pays UE
*) Gilt für EU-Mitgliedsländer
*) Válido para Países UE

IT PARTI DI RICAMBIO
EN *SPARE PARTS*
DE ERSATZTEILE
FR *PIECES DÉTACHÉES*
ES PIEZAS DE REPUESTO

ITALIANO | ENGLISH | DEUTSCH | FRANÇAIS | ESPAÑOL

PARTI DI RICAMBIO

Le ordinazioni delle parti di ricambio vanno fatte presso i nostri concessionari di zona e devono essere sempre corredate dalle seguenti indicazioni:

- **Tipo, modello e numero di matricola dell'attrezzatura.** Tali dati sono stampigliati nell'apposita targhetta di cui è dotata ogni attrezzatura.

- **Numero di codice della parte richiesta** rilevabile dal catalogo ricambi.

- **Descrizione del particolare e quantità richiesta.**

- **Numero della tavola.**

- **Mezzo di trasporto.** Nel caso questa voce non sia specificata, la Ditta Costruttrice, pur dedicando a questo servizio una particolare cura, non risponde di eventuali ritardi di spedizione dovuti a cause di forza maggiore.
Le spese di trasporto si intendono sempre a carico del destinatario. La merce viaggia a rischio e pericolo del committente anche se venduta franco destino.

NOTA: Il termine (**Dx**) **Destro** o (**Sx**) **Sinistro** della macchina o di parti di essa, è inteso guardando la macchina dalla parte posteriore. Le eccezioni saranno indicate.

SPARE PARTS

Orders must be transmitted through our area dealers and should always include the following indications:

- ***Type, model and serial number of the machine.*** *These data are punched on the data plate with which every implement is equipped.*

- ***Code number of the required spare part.*** *This will be found in the spare parts catalogue.*

- ***Description of the part and required quantity.***

- ***Table number.***

- ***Means of dispatch.*** *If this item is not indicated, the Manufacturer, while dedicating particular care to this service, shall not be held responsible for delays in delivery caused by cases of force majeure.*
Transport expenses shall always be at the consignee's charge. The goods travel at the purchaser's risk and peril even when sold ex destination.

NOTE: *The symbols* ***(Dx) right*** *and* ***(Sx) left****, concerning the machine or single parts of it, are referred, as in the figure, to a rear view of them. Exceptions will be indicated.*

ERSATZTEILE

Die Bestellungen müssen bei unseren Gebietshändrer aufgegeben werden. Bei der Bestellung sind stets die folgenden Angaben zu machen:

- **Typ, Modell und Serien-Nummer des Geräts**. Diese Daten stehen auf dem Typenschild, mit dem jedes Gerät versehen ist.

- **Artikel Nr. der erforderlichen Ersatzteile.** Diese stehen im Ersatzteil-Katalog.

- **Beschreibung des Ersatzteils und die erforderliche Stückzahl.**

- **Tafelnummer.**

- **Versandmittel.** Wenn dieser Punkt nicht spezifiziert wird, haftet die Herstellerfirma nicht für etwaigen Lieferverzug aufgrund höherer Gewalt, auch wenn er diesen Service besonders aufmerksam abwickelt.
Die Frachtkosten gehen dagegen immer zu Lasten des Empfängers. Die Ware reist auf Gefahr und Risiko des Auftraggebers, auch wenn frei Haus Verkauft vereinbart worden ist.

N.B.: Die Merkzeichen (**Dx**) **rechts** und (**Sx**) **links** betreffen eine rückwärtige Aussicht der Maschine oder Teile von ihr (siehe Bild). Ausnahmen werden gezeigt.

PIECES DÈTACHÈES

Les ordres doivent être effectués auprés de nos concessionaires de zone en précisant les indications suivantes:

- ***Type, modéle et numéro de série de la machine****. Ces données sont gravées sur la plaque d'identification de chaque outil.*

- ***Numéro de code de la piéce détachée*** *indiqué sur le catalogue des piéces détachées.*

- ***Description de la piéce et quantité requise****.*

- ***Numéro de plan****.*

- ***Moyen d'expédition****. Si cette rubrique n'est pas indiquée, le Constructeur, bien que soucieux de ce service, ne répond pas des retards d'expédition pour des causes de force majeure.*
Les frais de transport sont toujours à la charge du destinataire. La marchandise voyage aux risques et périls de l'acheteur même si vendue franco de port.

N.B.: *Les références* ***(Dx) droit*** *et* ***(Sx) gauche*** *de la machine ou des parties de la même, est entendue, comme de la figure, en regardant la machine de derriere dans le sens de marche.*

RESPUESTOS

Los pedidos han de efectuarse en nuestros consesionarios de zona y deben incluir siempre las siguientes indicaciones:

- **Tipo, modelo y número de matrícula del equipo**. Dichos datos están impresos en la relativa placa presente en el equipo.

- **Número de código de la parte requerida** presente en el catálogo respuestos.

- **Descripcíon de la pieza y cantidad requerida**.

- **Numero de illustración**.

- **Medio de transporte**. En caso que este ítem no esté especificado, el Fabricante, aún prestando la debidas consideraciones para este aspecto, no responde por eventuales retardos de env'o debidos a causas de fuerza mayor.
Los gastos de transporte se consideran siempre a cargo del destinatario. La mercandería viaja bajo riesgo y peligro del comprador, incluso cuando se vende franco destino.

N.B.: La refencia (**Dx**) **derecha** o (**Sx**) **izquierda** de la máquina o de sus componentes, se entiende, como en la figura, mirando la máquina por la parte trasera. Se indicarán las excepciones.

N° Tavola	INDICE	Pagina
TAV_009	TELAIO INFERIORE + TIMONE + ROLLBAR + GANCI	7
TAV_015	TELAIO SUPERIORE	11
TAV_019	PORTELLONE	13
TAV_025	SEGNALATORI DI CARICAMENTO	15
TAV_029	RUOTE	17
TAV_345	SPESSORE RUOTE	19
TAV_035	SCATOLA DI TRASMISSIONE	21
TAV_040	SCATOLA DI TRASMISSIONE PTO	23
TAV_045	ESPLOSO SCATOLA DI TRASMISSIONE	25
TAV_049	RULLI	27
TAV_054	RULLI CUT	29
TAV_060	RULLI "H20"	31
TAV_065	RULLI CUT "H20"	35
TAV_070	TRASMISSIONE	39
TAV_074	BILANCIERE	43
TAV_078	INFALDATORE	45
TAV_085	ROTOR: TELAIO + ROTORE	47
TAV_090	CUT 13: TELAIO + ROTORE	49
TAV_100	CUT 13: TRAVERSA COLTELLI	53
TAV_110	SICUREZZA TRASMISSIONE MECCANICA CON BULLONE	55
TAV_119	PICK-UP M	57
TAV_175	COCLEE PICK-UP M	59
TAV_139	PICK-UP M CUT	61
TAV_125	PICK-UP L	63
TAV_185	COCLEE PICK-UP L	65
TAV_145	PICK-UP L CUT	67
TAV_150	RULLO CONVOGLIATORE CUT (PICK-UP M)	69
TAV_155	RULLO CONVOGLIATORE CUT (PICK-UP L)	71
TAV_159	ASPO	73
TAV_170	TRASMISSIONE PICK-UP	75
TAV_180	TRASMISSIONE PICK-UP CUT	79
TAV_190	IMPIANTO IDRAULICO PICK-UP	83
TAV_195	IMPIANTO IDRAULICO PICK-UP CUT	85
TAV_200	RUOTE PICK-UP	87
TAV_350	SOSTEGNO RUOTE PICK-UP	89
TAV_210	IMPIANTO IDRAULICO MACCHINA	91
TAV_215	VALVOLA PRESSIONE ELETTRONICA	93
TAV_219	CABLAGGIO	95
TAV_225	LEGATORE FILO	97

N° Table	*INDEX*	*Page*
TAV_009	*LOWER FRAME + CROSSBAR + ROOLBAR + HOOKS*	*7*
TAV_015	*UPPER FRAME*	*11*
TAV_019	*REAR GATE*	*13*
TAV_025	*LOADER INDICATORS*	*15*
TAV_029	*WHEELS*	*17*
TAV_345	*WHEEL THICKNESS*	*19*
TAV_035	*GEARBOX*	*21*
TAV_040	*GEARBOX PTO*	*23*
TAV_045	*GEARBOX PARTS*	*25*
TAV_049	*ROLLERS*	*27*
TAV_054	*ROLLERS CUT*	*29*
TAV_060	*ROLLERS "H20"*	*31*
TAV_065	*ROLLERS CUT "H20"*	*35*
TAV_070	*TRANSMISSION*	*39*
TAV_074	*BELT TENSIONER ARM*	*43*
TAV_078	*FEEDING SYSTEM*	*45*
TAV_085	*ROTOR: FRAME + ROTOR*	*47*
TAV_090	*CUT 13: FRAME + ROTOR*	*49*
TAV_100	*CUT 13: KNIVES CROSSBAR*	*53*
TAV_110	*TRANSMISSION SAFETY DEVICE MECHANICAL WITH BOLT*	*55*
TAV_119	*PICK-UP M*	*57*
TAV_175	*AUGER PICH-UP M*	*59*
TAV_139	*PICK-UP M CUT*	*61*
TAV_125	*PICK-UP L*	*63*
TAV_185	*AUGER PICK-UP L*	*65*
TAV_145	*PICK-UP L CUT*	*67*
TAV_150	*ROLLER CONVEYOR CUT (PICK-UP M)*	*69*
TAV_155	*ROLLER CONVEYOR CUT (PICK-UP L)*	*71*
TAV_159	*PICK-UP SHAFT*	*73*
TAV_170	*PICK-UP TRANSMISSION*	*75*
TAV_180	*PICK-UP CUT TRANSMISSION*	*79*
TAV_190	*PICK-UP HYDRAULIC SYSTEM*	*83*
TAV_195	*PICK-UP CUT HYDRAULIC SYSTEM*	*85*
TAV_200	*PICK-UP WHEEL*	*87*
TAV_350	*PICK-UP WHEEL SUPPORT*	*89*
TAV_210	*MACHINE HYDRAULIC SYSTEM*	*91*
TAV_215	*ELECTRONIC PRESSURE VALVE*	*93*
TAV_219	*CONTROL SYSTEM*	*95*
TAV_225	*TWINE BINDER*	*97*

N° Tavola	INDICE	Pagina
TAV_230	LEGATORE FILO: CASSONETTO	101
TAV_235	CARTER ANTERIORE (SOLO CON LEGATORE FILO)	103
TAV_240	LEGATORE RETE (PARTE 1)	105
TAV_245	LEGATORE RETE (PARTE 2)	107
TAV_250	LEGATORE RETE (PARTE 3)	109
TAV_255	LEGATORE RETE (PARTE 4)	111
TAV_260	LEGATORE RETE (PARTE 5)	113
TAV_265	IMPIANTO OLIATURA AUTOMATICA	117
TAV_275	CARTER ANTERIORI	119
TAV_280	CARTER LATERALI	121
TAV_285	IMPIANTO LUCI + CUNEI	123
TAV_290	ESPULSORE	125
TAV_295	GRAFFATURA	127
TAV_300	KIT CASSONETTO SUPPLEMENTARE PER BOBINE FILO	129
TAV_305	KIT STAFFE SUPPLEMENTARI PER ROTOLO RETE	131
TAV_310	KIT FILM PLASTICO	133
TAV_315	DISPOSITIVO DI STAZIONAMENTO MECCANICO	135
TAV_320	DISPOSITIVO DI STAZIONAMENTO IDRAULICO (CUT)	137
TAV_325	FRENO IDRAULICO (NO OMOLOGAZIONE ITALIA)	139
TAV_328	DECAL "LOGO"	141
TAV_329	DECAL "LOGO"	143
TAV_335	DECAL "CE"	145
TAV_339	DECAL "ISTRUZIONE"	147

N° Table	*INDEX*	*Page*
TAV_230	*TWINE BINDER: TWINE BOX*	*101*
TAV_235	*FRONT CARTER (ONLY WITH TWINE BINDER)*	*103*
TAV_240	*NET BINDER (PART 1)*	*105*
TAV_245	*NET BINDER (PART 2)*	*107*
TAV_250	*NET BINDER (PART 3)*	*109*
TAV_255	*NET BINDER (PART 4)*	*111*
TAV_260	*NET BINDER (PART 5)*	*113*
TAV_265	*AUTOMATIC OILING SYSTEM*	*117*
TAV_275	*FRONT CARTER*	*119*
TAV_280	*SIDE CARTER*	*121*
TAV_285	*LIGHTS PLANT + CHOCKS*	*123*
TAV_290	*EJECTOR*	*125*
TAV_295	*STAPLING DEVICE*	*127*
TAV_300	*ADDITIONAL TWINE BOX KIT*	*129*
TAV_305	*ADDITIONAL NET SUPPORT KIT*	*131*
TAV_310	*PLASTIC FILM KIT*	*133*
TAV_315	*MECHANICAL PARKING DEVICE*	*135*
TAV_320	*HYDRAULIC PARKING DEVICE (CUT)*	*137*
TAV_325	*HYDRAULIC BRAKE (NO ITALY APPROVAL)*	*139*
TAV_328	*DECAL "LOGO"*	*141*
TAV_329	*DECAL "LOGO"*	*143*
TAV_335	*DECAL "CE"*	*145*
TAV_339	*DECAL "INSTRUCTION"*	*147*

TAV_009

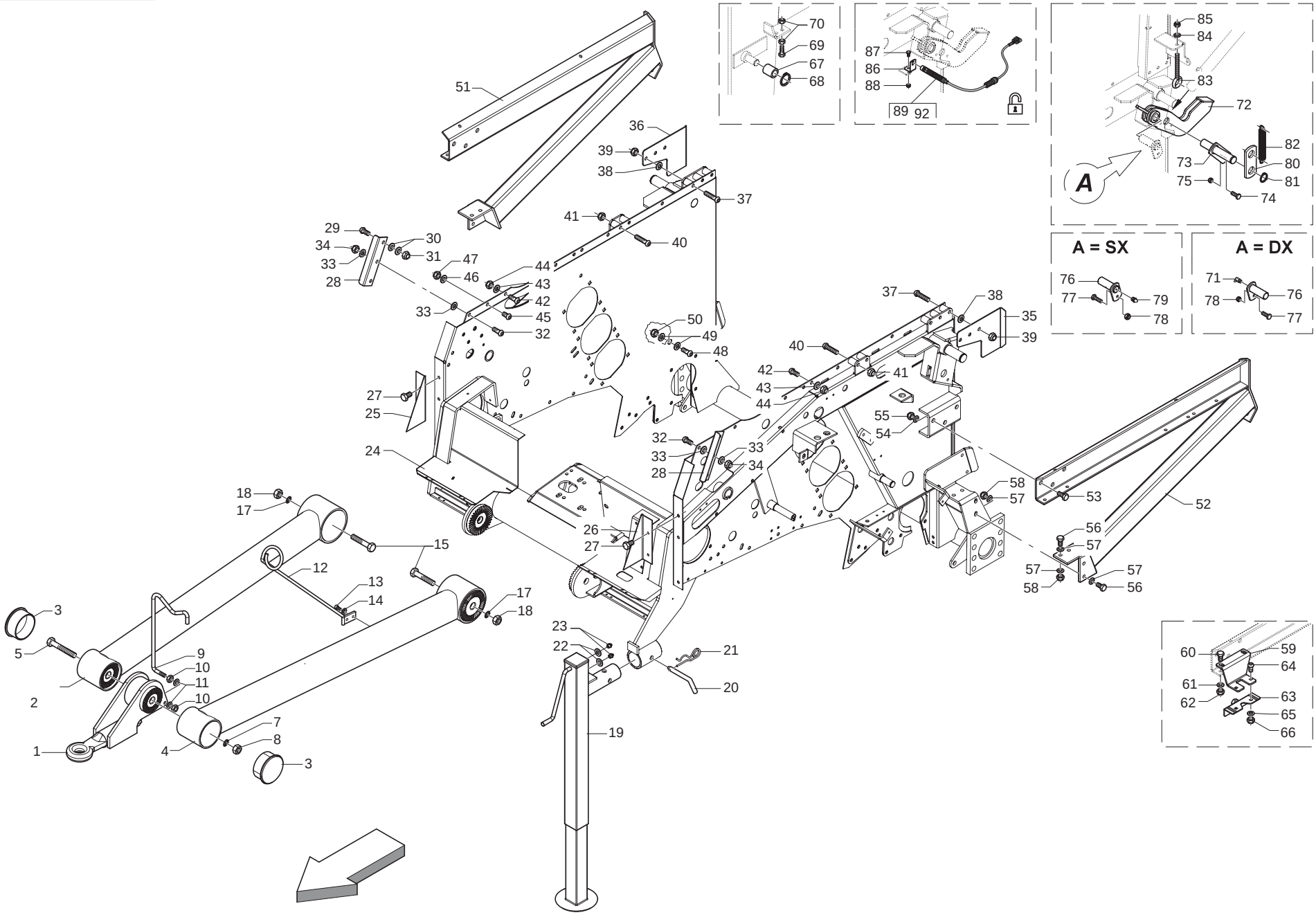

MASCHIO

cod. B0D5P0108

TELAIO INFERIORE + TIMONE + ROLLBAR + GANCI
LOWER FRAME + CROSSBAR + ROOLBAR + HOOKS

TAV_009

Pos.	Cod.	Descrizione	Description	Description	Benennung	Descripcion
1	B07S01750	TRAINO 35	TOWING EYE 35	EQUIPEMENT DE TIRAGE DIAM. 35	ZUGOESE 35	
2	B07S01751G	ALA DX TIMONE	RIGHT DRAW BAR FLANGE			
3	B07V00099	TAPPO PER OCCHIONE	PLUG FOR TOWING EYE	BOUCHON POUR OEIL DE TRACTION	ZUGOESENSCHLIESSPFROPFEN	
4	B07S01843G	ALA SX TIMONE	LEFT DRAW BAR FLANGE			
5	F01020628	VITE M24X3X180 U5737 10.9ZB	SCR. M24X3X180 U5737 10.9ZB	VIS M24X3X180 5739 10.9 ZN	SCHRAUBE M24X3X180 5739 10.9 Z	TORNILLO M24X3X180 5739 10.9 Z
7	B01622450	ROND.GROWER 24 B DIN127 ZINC	WASHER	RONDELLE	GROWER BEILAGSCHEIBE 24	
8	B00740724	DADO M24X 2 D982 8 ZN	NUT	ECROU	MUTTER M24-8G	
9	B0C005121	SOSTEGNO CARDANO	CARDAN SHAFT SUPPORT	SUPPORT CARDAN	KARDANWELLENHALTER	
10	B00920412	DADO M12X1,75 D985 8 ZN	NUT	ECROU	SELBSTSICHERNDE MUTTER M12-5S	
11	F01410076	ROS.M12 13X 20X2,0 U1749 ZN	WASHER	RONDELLE	SCHEIBE	
12	B07S01825	SOSTEGNO TUBAZIONI	HOSE SUPPORT	SUPPORT TUYAUTERIES	SCHLAUCHHALTERUNG	
13	B00471025	VITE TTEI M10X 25-8.8 UNBRA	SCREW	VIS	SCHRAUBE TTEI M10X 25-8.8	
14	F01410062	ROS.M10 10,5X 18X 2 U6592 ZN	WASHER M10 10,5X 18X 2 U6592	RONDELLE M10 10,5X18X2 ZN	DICHTUNGSRING M10 10,5X18X2 ZN	RONDANA M10 10,5X18X2 ZN
15	F01020343	VITE M24X3X80 U5737 10.9ZD	SCR. M24X3X80 U5737 10.9ZD	VIS M24X3X80 U5737 10.9 ZN	SCHRA. M24X3X80 U5737 10.9 ZN	TORN. M24X3X80 U5737 10.9 ZN
17	B01622450	ROND.GROWER 24 B DIN127 ZINC	WASHER	RONDELLE	GROWER BEILAGSCHEIBE 24	
18	B00740724	DADO M24X 2 D982 8 ZN	NUT	ECROU	MUTTER M24-8G	
19	B07S01755	SERVOTIMONE	DRAW BAR STAND	SERVO BARRE DE TIRAGE	STUETZFUSS	
20	B013C0001	SPINA 16X158 CON PIEGA	PIN	GOUPILLE	STIFT	
21	B011B0499	SPINA A MOLLA A DOPPIO GIRO 4	PIN	GOUPILLE CLIPS	ZAPFEN	
22	F01410051	ROS.M8 8,4X 17X1,6 U6592 ZN	WASHER M8 8,4X17X1,6 U6592 ZN	RONDELLE	SCHEIBE	
23	B04200810	INGRAS HYDR M 8X1 DRITTO	GREASE	GRAISSEUR HYDRAULIQUE	GERADER SCHMIERNIPPEL M8X1	
24	B07SP0054	TELAIO INFERIORE LT	LT LOWER FRAME	CHASSIS INFERIEUR LT	RAHMEN UNTEN LT	
25	B0C005036	CHIUSURA ANT. DX	RIGHT FRONT LOCK	FERMETURE ANTERIEURE DROITE	RECHTER VORDERER VERSCHLUSS	
26	B0C005035	CHIUSURA ANT. SX	LEFT FRONT LOCK	FERMETURE ANTERIEURE GAUCHE	LINKER VORDERER VERSCHLUSS	
27	F01020436	VITE M8X1,25X20 U5739 8.8ZN	SCR. M8X1,25X20 U5739 8.8ZN	VIS M8X1,25X 20 U5739 8.8 ZN	SCHRAUBE M8X1,25X20U5739 8.8ZN	TORN. M8X1,25X20 U5739 8.8 ZN
28	B0C005026	RINFORZO TELAI	FRAME STIFFENING			
29	B00471230	VITE TTEI M12X 30-8.8 UNBRA	SCREW	VIS	SCHRAUBE TTEI M12X 30-8.8	
30	F01410076	ROS.M12 13X 20X2,0 U1749 ZN	WASHER	RONDELLE	SCHEIBE	
31	B00920412	DADO M12X1,75 D985 8 ZN	NUT	ECROU	SELBSTSICHERNDE MUTTER M12-5S	
32	B00471230	VITE TTEI M12X 30-8.8 UNBRA	SCREW	VIS	SCHRAUBE TTEI M12X 30-8.8	
33	F01410076	ROS.M12 13X 20X2,0 U1749 ZN	WASHER	RONDELLE	SCHEIBE	
34	B00920412	DADO M12X1,75 D985 8 ZN	NUT	ECROU	SELBSTSICHERNDE MUTTER M12-5S	
35	B0C004488	RIPARO GANCIO SX	SHELTER HOOK LEFT			
36	B0C004506	RIPARO GANCIO DX	RIGHT HOOK GUARD	PROTECTION CROCHET DROIT	RECHTER HAKENSCHUTZ	
37	B00471280	VITE TTEI M12X 80-10.9 UNBRAKO	SCREW	VIS	SCHRAUBE TTEI M12X 80-8.8	
38	F01410076	ROS.M12 13X 20X2,0 U1749 ZN	WASHER	RONDELLE	SCHEIBE	
39	B00920412	DADO M12X1,75 D985 8 ZN	NUT	ECROU	SELBSTSICHERNDE MUTTER M12-5S	
40	B00471280	VITE TTEI M12X 80-10.9 UNBRAKO	SCREW	VIS	SCHRAUBE TTEI M12X 80-8.8	
41	B00920412	DADO M12X1,75 D985 8 ZN	NUT	ECROU	SELBSTSICHERNDE MUTTER M12-5S	
42	B00471225	VITE TTEI M12X 25-8.8 UNBRA	SCREW	VIS	SCHRAUBE TTEI M12X 25-8.8	
43	F01410076	ROS.M12 13X 20X2,0 U1749 ZN	WASHER	RONDELLE	SCHEIBE	
44	B00920412	DADO M12X1,75 D985 8 ZN	NUT	ECROU	SELBSTSICHERNDE MUTTER M12-5S	
45	B00471220	VITE TTEI M12X 20-8.8 UNBRA	SCREW	VIS	SCHRAUBE TTEI M12X 20-8.8	
46	F01410076	ROS.M12 13X 20X2,0 U1749 ZN	WASHER	RONDELLE	SCHEIBE	
47	B00920412	DADO M12X1,75 D985 8 ZN	NUT	ECROU	SELBSTSICHERNDE MUTTER M12-5S	
48	B00471225	VITE TTEI M12X 25-8.8 UNBRA	SCREW	VIS	SCHRAUBE TTEI M12X 25-8.8	
49	F01420120	ROS.M12 13X 36X2,5 U6593 ZN	WASHER	RONDELLE	SCHEIBE	
50	B00920412	DADO M12X1,75 D985 8 ZN	NUT	ECROU	SELBSTSICHERNDE MUTTER M12-5S	
51	B07S01663	TELAIO ROLL DX 265-280	RIGHT ROLL FRAME	CHASSIS ROLL DROIT 265-280	RECHTER ROLL RAHMEN	
52	B07S01550	TELAIO ROLL SX 265-280	LEFT ROLL FRAME	CHASSIS ROLL GAUCHE 265 280	LINKER ROLL RAHMEN	
53	F01020564	VITE M16X2X35 U5739 8.8ZN	SCR. M16X2X35 U5739 8.8ZN	VIS M 16X35	SCHRAUBE M 16X35	TORNILLO M 16X35
54	F01410100	ROS.M16 17X 30X 3 U6592 ZN	WASHER	RONDELLE	SCHEIBE	
55	B00920516	DADO M16X 1,5 D985 6S ZN	NUT M16X1,5 D985 6S ZN	ECROU	SELBSTSICHERNDE MUTTER M16-5S	
56	F01020512	VITE M12X1,75X35 U5739 8.8ZN	SCR. M12X1,75X35 U5739 8.8ZN	VIS M12X1,75X35 5739 8.8 ZN	SCHR. M12X1,75X35 5739 8.8 ZN	TORN. M12X1,75X35 5739 8.8 ZN
57	F01410076	ROS.M12 13X 20X2,0 U1749 ZN	WASHER	RONDELLE	SCHEIBE	
58	B00920412	DADO M12X1,75 D985 8 ZN	NUT	ECROU	SELBSTSICHERNDE MUTTER M12-5S	
59	B0C005184	ATTACCO CHIUSURA	CLOSURE COUPLING	ATTELAGE FERMETURE	VERSCHLUSSANSCHLUSS	

TAV_009

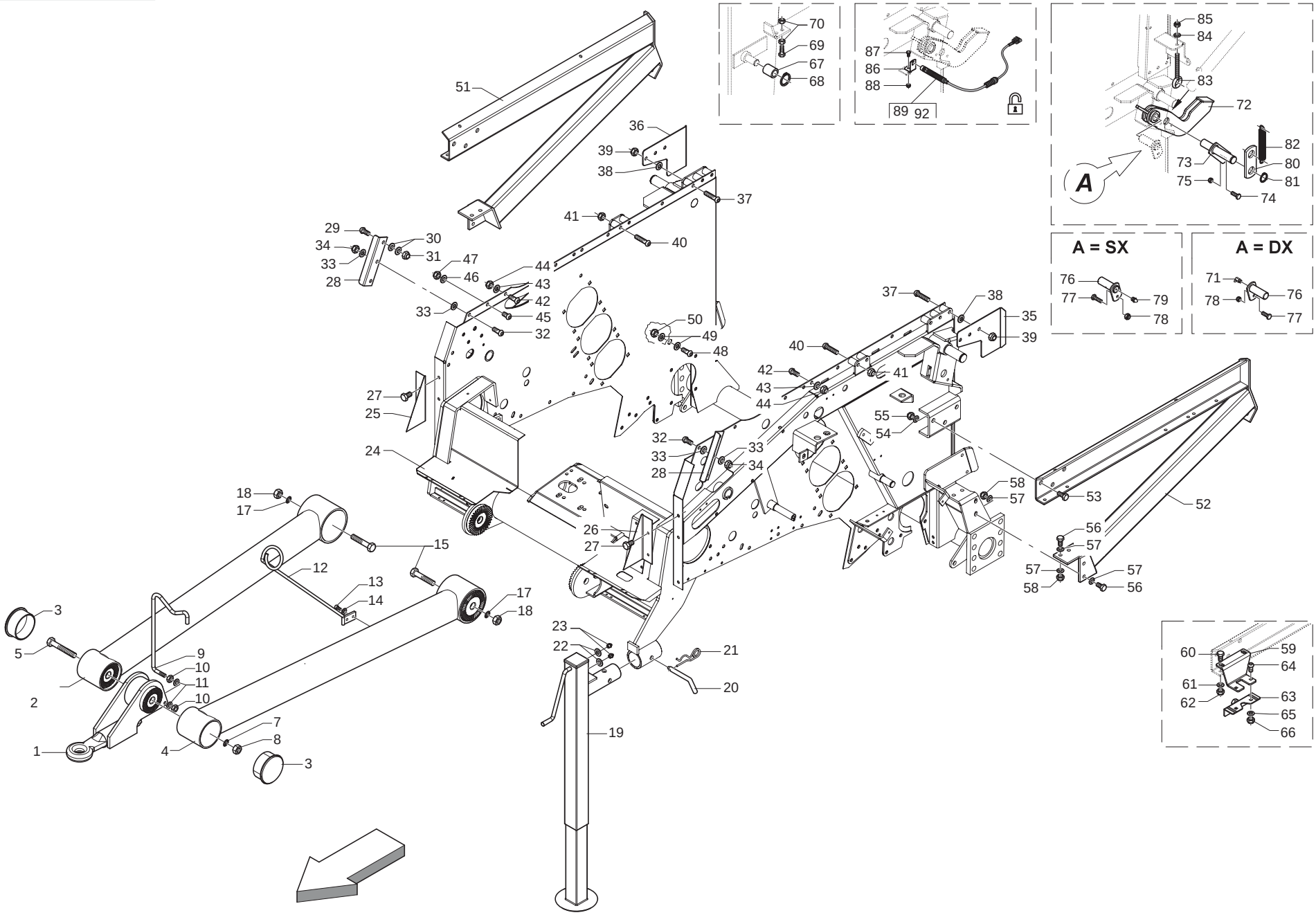

MASCHIO

cod. B0D5P0108

TELAIO INFERIORE + TIMONE + ROLLBAR + GANCI
LOWER FRAME + CROSSBAR + ROOLBAR + HOOKS

TAV_009

Pos.	Cod.	Descrizione	Description	Description	Benennung	Descripcion
60	F01020479	VITE M10X1,5X35 U5739 8.8ZN	SCR. M10X1,5X35 U5739 8.8ZN	VIS M10X1,5X35 U5739 8.8 ZN	SCHR. M10X1,5X35 U5739 8.8 ZN	TORN. M10X1,5X35 U5739 8.8 ZN
61	F01410062	ROS.M10 10,5X 18X 2 U6592 ZN	WASHER M10 10,5X 18X 2 U6592	RONDELLE M10 10,5X18X2 ZN	DICHTUNGSRING M10 10,5X18X2 ZN	RONDANA M10 10,5X18X2 ZN
62	F01230202	DADO M10X1,25 D985 8 ZN	SELF-LOCKING NUT	ECROU NYLSTOP	SELBSTSICHERNDE MUTTER M10-5S	
63	B01800041	CHIUS.SCHWARZ RIF.SV 941104-00	LOCK	FERMETURE	VERSCHLUSS SCHWARZ REF. SV. 9	
64	F01030208	VITE TTEI M 8X 20-10,9 UMBRAKO	SCREW	VIS	SCHRAUBE TTEI M 8X 20-10.9	
65	F01410051	ROS.M8 8,4X 17X1,6 U6592 ZN	WASHER M8 8,4X17X1,6 U6592 ZN	RONDELLE	SCHEIBE	
66	B00920208	DADO M8X1 D985 8ZN	NUT M8X1 D985 8ZN	ECROU	SELBSTSICHERNDE MUTTER M8-5S	
67	B01300612	DISTANZIALE 30,5X42X45	SPACER	ENTRETOISE	DISTANZSTUECK 30,5X42X45	
68	F02050112	ANEL. D ARR. ALB. 30-E UNI3653	SEEGER RING	BAGUE SEEGER	SEEGERRING 30-E	
69	F01020519	VITE M12X1,75X 60 U5739 8.8ZN	SCREW M12X1,75X 60 U5739 8.8ZN			
70	F01200293	DADO M12X1,75 U5588 CL8 ZN	NUT M12X1,75 U5588 6S ZN	ECROU M12X1,75 U5588 6S ZN	MUTTER M12X1,75 U5588 6S ZN	TUERCA M12X1,75 U5588 6S ZN
71	F01100013	INGRAS HYDR M 6X1 90	GREASE NIPPLE	GRAISSEUR HYDRAULIQUE	SCHMIERNIPPEL M6X1 90	
72	B07S01772	GANCIO PORTELLONE	REAR GATE HOOK	CROCHET PORTE ARRIERE	HECKKLAPPENHAKEN	
73	B07S01757	SPINA MARTINETTO PORTELLONE	REAR GATE CYLINDER PIN	GOUPILLE VERIN PORTE ARRIERE	HECKKLAPPENZYLINDERBOLZEN	
74	F01020440	VITE M8X1,25X25 U5739 8.8ZN	SCR. M8X1,25X25 U5739 8.8ZN	VIS M8X1,25X25 U5739 8.8 ZN	SCHRAUBE M8X1,25X25U5739 8.8ZN	TORNIL.M8X1,25X25 U5739 8.8 ZN
75	B00920208	DADO M8X1 D985 8ZN	NUT M8X1 D985 8ZN	ECROU	SELBSTSICHERNDE MUTTER M8-5S	
76	B07S00937	SPINA GANCIO PORTELLONE	TAILGATE HOOK PIN	AXE ACCROCHAGE PORTE POST.	HECKKLAPPENHAKENBOLZEN	
77	F01020440	VITE M8X1,25X25 U5739 8.8ZN	SCR. M8X1,25X25 U5739 8.8ZN	VIS M8X1,25X25 U5739 8.8 ZN	SCHRAUBE M8X1,25X25U5739 8.8ZN	TORNIL.M8X1,25X25 U5739 8.8 ZN
78	B00920208	DADO M8X1 D985 8ZN	NUT M8X1 D985 8ZN	ECROU	SELBSTSICHERNDE MUTTER M8-5S	
79	B04200610	INGRASS.A SFERE M6X1 LUNGO	GREASE NIPPLE	GRAISSEUR HYDRAULIQUE	GERADER SCHMIERNIPPEL M6X1	
80	BC004902L	RINFORZO	STIFFENING			
81	B01700020	ANEL. D ARR. ALB. 20-E UNI3653	SEEGER RING	BAGUE SEEGER	SEEGERRING 20-E	
82	B01826161	MOLLA CONTRASTO RULLO	SPRING	RESSORT	FEDER	
83	B00545168	OCCHIOLO PER TENDITORI M12-DX	EYELET M12	OEIL M12	OSE M12	
84	F01410076	ROS.M12 13X 20X2,0 U1749 ZN	WASHER	RONDELLE	SCHEIBE	
85	B00920412	DADO M12X1,75 D985 8 ZN	NUT	ECROU	SELBSTSICHERNDE MUTTER M12-5S	
86	B0C004245	SOSTEGNO	SUPPORT	SUPPORT	HALTER	
87	F01020470	VITE M10X1,5X20 U5739 8.8ZN	SCR. M10X1,5X20 U5739 8.8ZN	VIS M10X1,5X20 U5739 8.8 ZN	SCHRAUBE M10X1,5X20 U5739 ZN	TORNILLOM10X1,5X20 U5739 8.8ZN
88	F01230202	DADO M10X1,25 D985 8 ZN	SELF-LOCKING NUT	ECROU NYLSTOP	SELBSTSICHERNDE MUTTER M10-5S	
89	B0E0P0016	SENSORE GANCIO DX F_BUS	SENSOR	SENSEUR	SENSOR HACKEN RECHTS	
92	B0E0P0017	SENSORE GANCIO SX F_BUS	SENSOR	SENSEUR	SENSOR HACKEN LINKS	

TAV_015

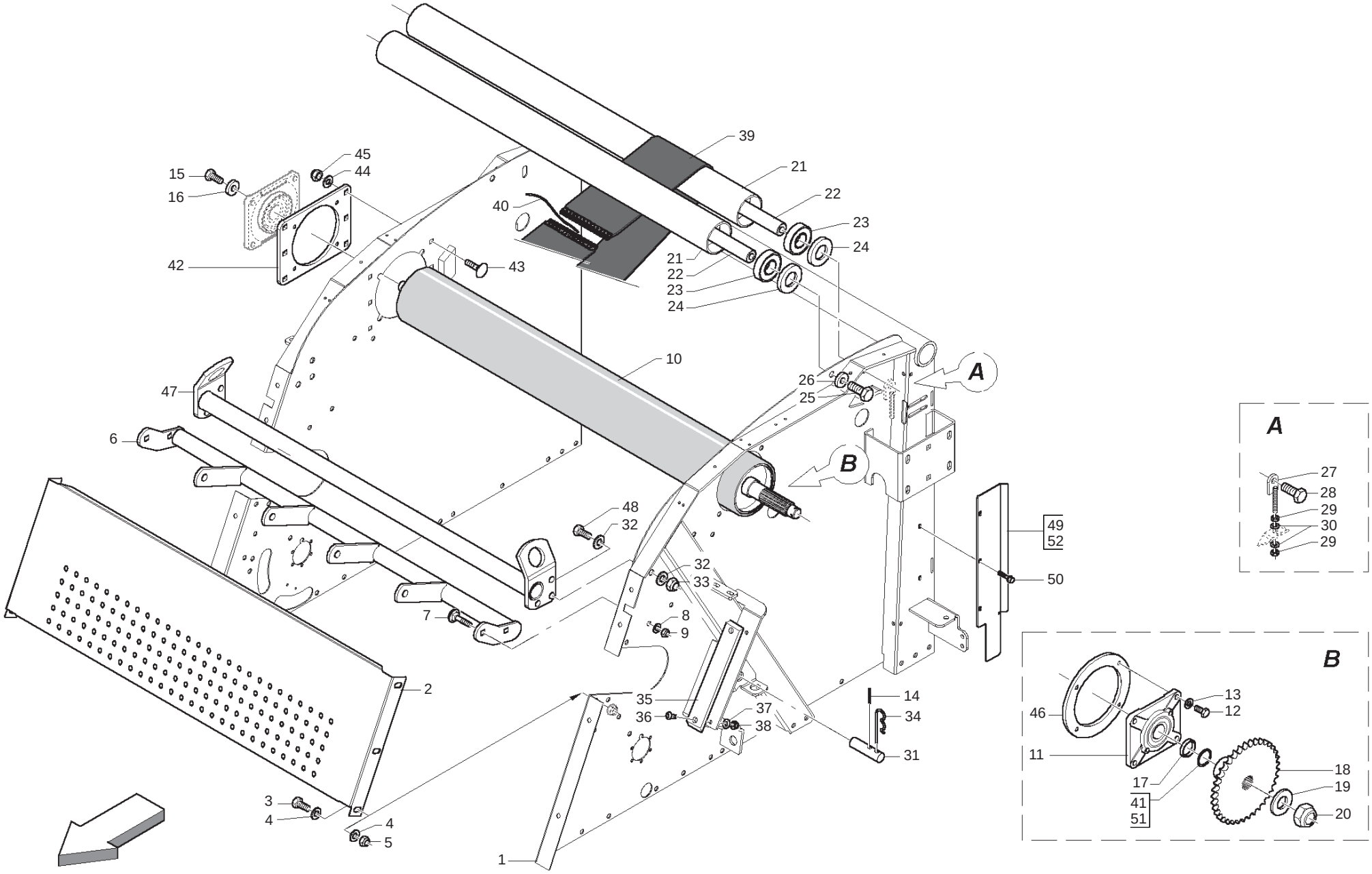

MASCHIO

cod. B0D5P0108

TELAIO SUPERIORE
UPPER FRAME

TAV_015

Pos.	Cod.	Descrizione	Description	Description	Benennung	Descripcion
1	B07SP0067	TELAIO SUPERIORE 265 LT	UPPER FRAME 265 LT			
2	B0C005396	COLLEGAMENTO ANTER.220	FRONT ATTACHMEN 220			
3	F01020510	VITE M12X1,75X30 U5739 8.8ZN	SCR. M12X1,75X30 U5739 8.8ZN	VIS M12X1,75X30 U5739 8.8ZN	SCHRAU.M12X1,75X30 U5739 8.8ZN	TORN. M12X1,75X30 U5739 8.8ZN
4	F01410076	ROS.M12 13X 20X2,0 U1749 ZN	WASHER	RONDELLE	SCHEIBE	
5	B00920412	DADO M12X1,75 D985 8 ZN	NUT	ECROU	SELBSTSICHERNDE MUTTER M12-5S	
6	B07SP0078	GUIDACINGHIE ANT. LT	FRONT BELTS GUIDE	GUIDE COURROIES ANTERIEUR LT	RIEMENFUEHRUNG VORN LT	
7	B00321230	VITE TTQST M12X 30-4.6 UNI 573	SCREW	VIS	SCHRAUBE	
8	F01410076	ROS.M12 13X 20X2,0 U1749 ZN	WASHER	RONDELLE	SCHEIBE	
9	B00920412	DADO M12X1,75 D985 8 ZN	NUT	ECROU	SELBSTSICHERNDE MUTTER M12-5S	
10	B035P0017	RULLO GOMMATO LT	ROLLER LT	ROULEAU EN CAOUTCHOUC LT	GUMMWALZE LT	
11	B02700051	SUPPORTO FLANGIATO	FLANGED SUPPORT	SUPPORT EMBOUTI	FLANSCHLAGER	
12	F01020510	VITE M12X1,75X30 U5739 8.8ZN	SCR. M12X1,75X30 U5739 8.8ZN	VIS M12X1,75X30 U5739 8.8ZN	SCHRAU.M12X1,75X30 U5739 8.8ZN	TORN. M12X1,75X30 U5739 8.8ZN
13	F01410076	ROS.M12 13X 20X2,0 U1749 ZN	WASHER	RONDELLE	SCHEIBE	
14	F02100121	SPINA E.P. 6X 40 U6873 C70 BR	ELASTIC PIN 6X40	GOUJON ELASTIQUE 6X40	SPANNHUELSE 6X40	PASADOR 6X40
15	F01020564	VITE M16X2X35 U5739 8.8ZN	SCR. M16X2X35 U5739 8.8ZN	VIS M 16X35	SCHRAUBE M 16X35	TORNILLO M 16X35
16	B01515091	RALLA 17 52 6	FIFTH WHEEL	BUTEE	SCHEIBE	
17	B01300845	DISTANZIALE 40X50X4	SPACER	ENTRETOISE	DISTANZSCHEIBE 40X50X4	
18	B034P0014	INGR.RULLO GOMMATO Z=31-1	GEAR	ENGRANAGE ROULEAU Z=31	ZANHRAD	
19	B014R3050	ROSETTA 30 UNI 5714-69 E DEIDR	WASHER	RONDELLE	BEILAGSSCHEIBE	
20	F01230291	DADO M30X 2 D985 ZN	NUT	ECROU	SELBSTSICHERNDE MUTTER M30X2-5	
21	B03500172	RULLO FOLLE	IDLE ROLLER	ROULEAU FOU	UMLENKWALZE	
22	B03500214	ALBERO LUNGO	LONG SHAFT	ARBRE LONG	LANGE WELLE	
23	B02040002	CUSCINETTO 6307-2RS CAT.KST004	BEARING	ROULEMENT	LAGER 6307-2RS	
24	B01300623	CHIUSURA RULLI FOLLI	IDLE ROLLER LOCK	FERMETURE ROULEAUX FOUX	UMLENKWALZENVERSCHLUSS	
25	F01020564	VITE M16X2X35 U5739 8.8ZN	SCR. M16X2X35 U5739 8.8ZN	VIS M 16X35	SCHRAUBE M 16X35	TORNILLO M 16X35
26	B01519319	RALLA 16X38X5	FIFTH WHEEL	BUTEE	SCREIBE	
27	B07S01608	REGOLATORE RULLO	ROLLER ADJUSTER	REGLEUR ROULEAU	WALZENEINSTELLER	
28	F01020564	VITE M16X2X35 U5739 8.8ZN	SCR. M16X2X35 U5739 8.8ZN	VIS M 16X35	SCHRAUBE M 16X35	TORNILLO M 16X35
29	F01200293	DADO M12X1,75 U5588 CL8 ZN	NUT M12X1,75 U5588 6S ZN	ECROU M12X1,75 U5588 6S ZN	MUTTER M12X1,75 U5588 6S ZN	TUERCA M12X1,75 U5588 6S ZN
30	F01410076	ROS.M12 13X 20X2,0 U1749 ZN	WASHER	RONDELLE	SCHEIBE	
31	B013P0027	SPINA FERMO BILANCIERE LT	PLUG RETAINING ROCKER LT			
32	F01410100	ROS.M16 17X 30X 3 U6592 ZN	WASHER	RONDELLE	SCHEIBE	
33	B00920516	DADO M16X 1,5 D985 6S ZN	NUT M16X1,5 D985 6S ZN	ECROU	SELBSTSICHERNDE MUTTER M16-5S	
34	B01170595	SPINA MOLLA 5 OCCH.SEMPL.	PIN	GOUPILLE CLIPS	STIFT	
35	B07631842	GUIDA CATENA	CHAIN GUIDE	GUIDE	KETTENFUEHRUNG	
36	F01030208	VITE TTEI M 8X 20-10,9 UMBRAKO	SCREW	VIS	SCHRAUBE TTEI M 8X 20-10.9	
37	F01410051	ROS.M8 8,4X 17X1,6 U6592 ZN	WASHER M8 8,4X17X1,6 U6592 ZN	RONDELLE	SCHEIBE	
38	B00920208	DADO M8X1 D985 8ZN	NUT M8X1 D985 8ZN	ECROU	SELBSTSICHERNDE MUTTER M8-5S	
39	B076P0001	CINGHIA PER LT	BELT FOR LT	COURROIE POUR LT	RIENE FUER LT	
40	B09962005	CAVETTO GIUNZIONE MT.1	WIRE 2,5 PLAST.L.1MT	CABLE	KABEL 49 SCHNUREN	
41	B01300125	SPES. 40 48 0,5 ZINCATO	SHIM GALV	ENTRETOISE GALV	DISTANZSTUECK 40 48 0,5	
42	B0C4P0028	PIASTRA PER RULLO GOMMATO LT	LT RUBBER ROLLER PLATE	PLAQUE POUR ROULEAU EN CAUTCHO	PLATTE FUER GUMMIWALZE LT	
43	B00523421	VITE SPECIALE TTQST M12X35-8.8	SPECIAL SCREW	VIS SPCIALE	SCHRAUBE TTQST M12X 35-8.8	
44	F01410076	ROS.M12 13X 20X2,0 U1749 ZN	WASHER	RONDELLE	SCHEIBE	
45	B00920412	DADO M12X1,75 D985 8 ZN	NUT	ECROU	SELBSTSICHERNDE MUTTER M12-5S	
46	B013P0035	FLANGIA PER RULLO GOMMATO LT	FLANGE	BRIDE POUR ROULEAU EN CAOUTCHO	FLANSCH	
47	B07S01501	SOLLEVAMENTO 220	LIFTING BAR 220			
48	F01020566	VITE M16X2X40 U5739 8.8ZN	SCR. M16X2X40 U5739 8.8ZN	VIS M16X2X40 U5739 8.8 ZN	SCHRAUBE M16X2X40 U5739 8.8 ZN	TORNILLO M16X2X40 U5739 8.8 ZN
49	B0C3P0038	RIPARO SX PORTELLONE	DOOR GUARD LEFT SIDE	PROTECTION PORTE COTE GAUCHE	TUERSCHUTZ LINKS	
50	B00370615	VITE M 6X16 ZN SEZ.TRIL. U8111	SCREW	VIS	SCHRAUBE	
51	B01300126	SPES. 40 48 1 ZINC.ST_013	SHIM	ENTRETOISE	DISTANZSTUECK 40 408 1	
52	B0C3P0039	RIPARO DX PORTELLONE	DOOR GUARD RIGHT SIDE	PROTECTION PORTE COTE DROIT	TUERSCHUTZ RECHTS	

TAV_019

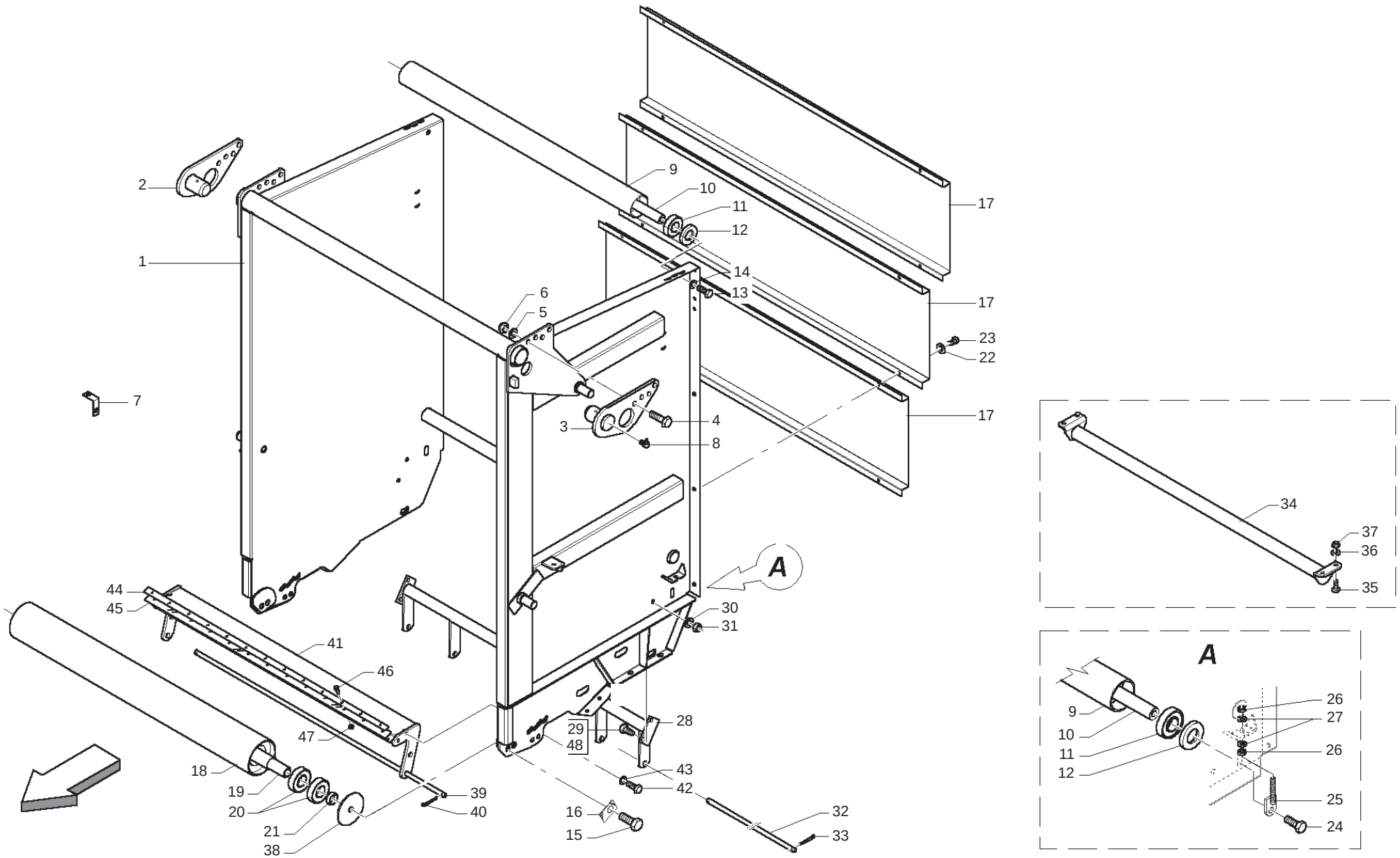

MASCHIO

cod. B0D5P0108

PORTELLONE
REAR GATE

TAV_019

Pos.	Cod.	Descrizione	Description	Description	Benennung	Descripcion
1	B07SP0025	PORTELLONE LT	TAILGATE LT			
2	B07SP0064	CERNIERA DX PORTELLONE LT	LT DOOR RIGHT HINGE			
3	B07SP0063	CERNIERA SX PORTELLONE LT	LT DOOR LEFT HINGE			
4	F01020568	VITE M16X2X45 U5739 8.8ZN	SCR. M16X2X45 U5739 8.8ZN	VIS M 16X 2X45 U5739 8.8 ZG	SCHRAUBE M 16X 2X45 U5739 8.8	TORNILLO M16X 2X45 U5739 8.8
5	F01410100	ROS.M16 17X 30X 3 U6592 ZN	WASHER	RONDELLE	SCHEIBE	
6	B00920516	DADO M16X 1,5 D985 6S ZN	NUT M16X1,5 D985 6S ZN	ECROU	SELBSTSICHERNDE MUTTER M16-5S	
7	B0C002357	PIASTRINA ATTACCO CAVI	CABLE ATTACHMENT PLATE	PLAQUETTE ATTELAGE CABLES	KABELHALTERPLATTE	
8	B04221010	INGRAS HYDR M10X1 90	GREASE NIPPLE	GRAISSEUR HYDRAULIQUE	SCHMIERNIPPEL M10X1 90	
9	B03500172	RULLO FOLLE	IDLE ROLLER	ROULEAU FOU	UMLENKWALZE	
10	B03500214	ALBERO LUNGO	LONG SHAFT	ARBRE LONG	LANGE WELLE	
11	B02040002	CUSCINETTO 6307-2RS CAT.KST004	BEARING	ROULEMENT	LAGER 6307-2RS	
12	B01300623	CHIUSURA RULLI FOLLI	IDLE ROLLER LOCK	FERMETURE ROULEAUX FOUX	UMLENKWALZENVERSCHLUSS	
13	F01020564	VITE M16X2X35 U5739 8.8ZN	SCR. M16X2X35 U5739 8.8ZN	VIS M 16X35	SCHRAUBE M 16X35	TORNILLO M 16X35
14	B01519319	RALLA 16X38X5	FIFTH WHEEL	BUTEE	SCREIBE	
15	F01020605	VITE M20X2,5X50 U5739 8.8ZN	SCR. M20X2,5X50 U5739 8.8ZN	VIS M 20X2,5X50	SCHRAUBE M 20X2,5X50	TORNILLO M 20X2,5X50
16	B0C004148	RALLA DI FERMO	LOCK WASHER	BUTEE D ARRET	ANSCHLAGPLATTE	
17	B0C3P0025	CARTER POST. LT	LT REAR GUARD	CARTER POSTERIEUR LT	CARTER HINTEN LT	
18	B07S00959	RULLO FOLLE PORTELLONE	TAIL GATE IDLE ROLLER	ROULEAU FOU PORTE EN ARRIERE	HECKKLAPPENUMLENKWALZE	
19	B03500237	ALBERO CORTO	SHORT SHAFT	ARBRE COURT	KURZE WELLE	
20	B02040002	CUSCINETTO 6307-2RS CAT.KST004	BEARING	ROULEMENT	LAGER 6307-2RS	
21	B01300523	DISTANZIALE 35X 45X12,5	SPACER	ENTRETOISE	DISTANZSTUECK 35X45X12,5	
22	F01420048	ROS.M8 8,4X 24X 2 U6593 ZN	WASHER	RONDELLE	SCHEIBE	
23	F01030208	VITE TTEI M 8X 20-10,9 UMBRAKO	SCREW	VIS	SCHRAUBE TTEI M 8X 20-10.9	
24	F01020564	VITE M16X2X35 U5739 8.8ZN	SCR. M16X2X35 U5739 8.8ZN	VIS M 16X35	SCHRAUBE M 16X35	TORNILLO M 16X35
25	B07S01608	REGOLATORE RULLO	ROLLER ADJUSTER	REGLEUR ROULEAU	WALZENEINSTELLER	
26	F01200293	DADO M12X1,75 U5588 CL8 ZN	NUT M12X1,75 U5588 6S ZN	ECROU M12X1,75 U5588 6S ZN	MUTTER M12X1,75 U5588 6S ZN	TUERCA M12X1,75 U5588 6S ZN
27	F01410076	ROS.M12 13X 20X2,0 U1749 ZN	WASHER	RONDELLE	SCHEIBE	
28	B07SP0076	GUIDACINGHIE POST. LT	REAR BELTS GUIDE	GUIDECOURROIES POSTERIEUR LT	RIEMENFUEHRUNG HINTEN LT	
29	F01020508	VITE M12X1,75X 25 U5739 8.8ZN	SCREW	VIS	SCHRAUBE	
30	F01410076	ROS.M12 13X 20X2,0 U1749 ZN	WASHER	RONDELLE	SCHEIBE	
31	B00920412	DADO M12X1,75 D985 8 ZN	NUT	ECROU	SELBSTSICHERNDE MUTTER M12-5S	
32	B01300628	SPINA GUIDACINGHIE	BELT GUIDE PIN	GOUPILLE GUIDE-COURROIES	GURTENFUEHRUNGSBOLZEN	
33	B01150430	COPIGLIA 4X 30 U1336 ZN	GALV PIN	GOUPILLE GALV	SPLINT	
34	B07SP0099	COLLEGAMENTO INFERIORE LT	LOWER CONNECTION LT	CONNEXION INFERIEURE LT	UNTERER ANSCHLUSS LT	
35	B00181030	VITE M10X1,5 X 30 U5739 8.8ZN	SCREW	VIS	SCHRAUBE	
36	F01410062	ROS.M10 10,5X 18X 2 U6592 ZN	WASHER M10 10,5X 18X 2 U6592	RONDELLE M10 10,5X18X2 ZN	DICHTUNGSRING M10 10,5X18X2 ZN	RONDANA M10 10,5X18X2 ZN
37	F01230202	DADO M10X1,25 D985 8 ZN	SELF-LOCKING NUT	ECROU NYLSTOP	SELBSTSICHERNDE MUTTER M10-5S	
38	B01300590	RALLA 20,5 128 10	FIFTH WHEEL	BUTEE	SCHEIBE 20,5 128 10	
39	B01300628	SPINA GUIDACINGHIE	BELT GUIDE PIN	GOUPILLE GUIDE-COURROIES	GURTENFUEHRUNGSBOLZEN	
40	B01150430	COPIGLIA 4X 30 U1336 ZN	GALV PIN	GOUPILLE GALV	SPLINT	
41	B07S01023	RASCHIATORE PORTELLONE	TAILGATE SCRAPER	RACLEUR POSTERIEUR	HECKKLAPPENABSTREIFER	
42	F01020508	VITE M12X1,75X 25 U5739 8.8ZN	SCREW	VIS	SCHRAUBE	
43	B01531844	RALLA 13-25-6	FIFTH WHEEL	BUTEE	BEILAGSCHEIBE 13-25-6	
44	B0C003205	RINFORZO LAMA	BLADE STIFFENING BAR	RENFORT LAME	KLINGENVERSTEIFUNGSBLATT	
45	B07U00023	LAMA RASCH. FORNITURA PIENA	SCRAPER BLADE	LAME RACLEUR	ABSTREIFERBLATT	
46	B00470620	VITE TTEI M 6X 20-8.8 UNBRA	SCREW	VIS	SCHRAUBE TTEI M6X20-10.9	
47	B00920106	DADO M6X1 D985 8ZN	NUT	ECROU	SELBSTSICHERNDE MUTTER M6-5S	
48	F01020512	VITE M12X1,75X35 U5739 8.8ZN	SCR. M12X1,75X35 U5739 8.8ZN	VIS M12X1,75X35 5739 8.8 ZN	SCHR. M12X1,75X35 5739 8.8 ZN	TORN. M12X1,75X35 5739 8.8 ZN

TAV_025

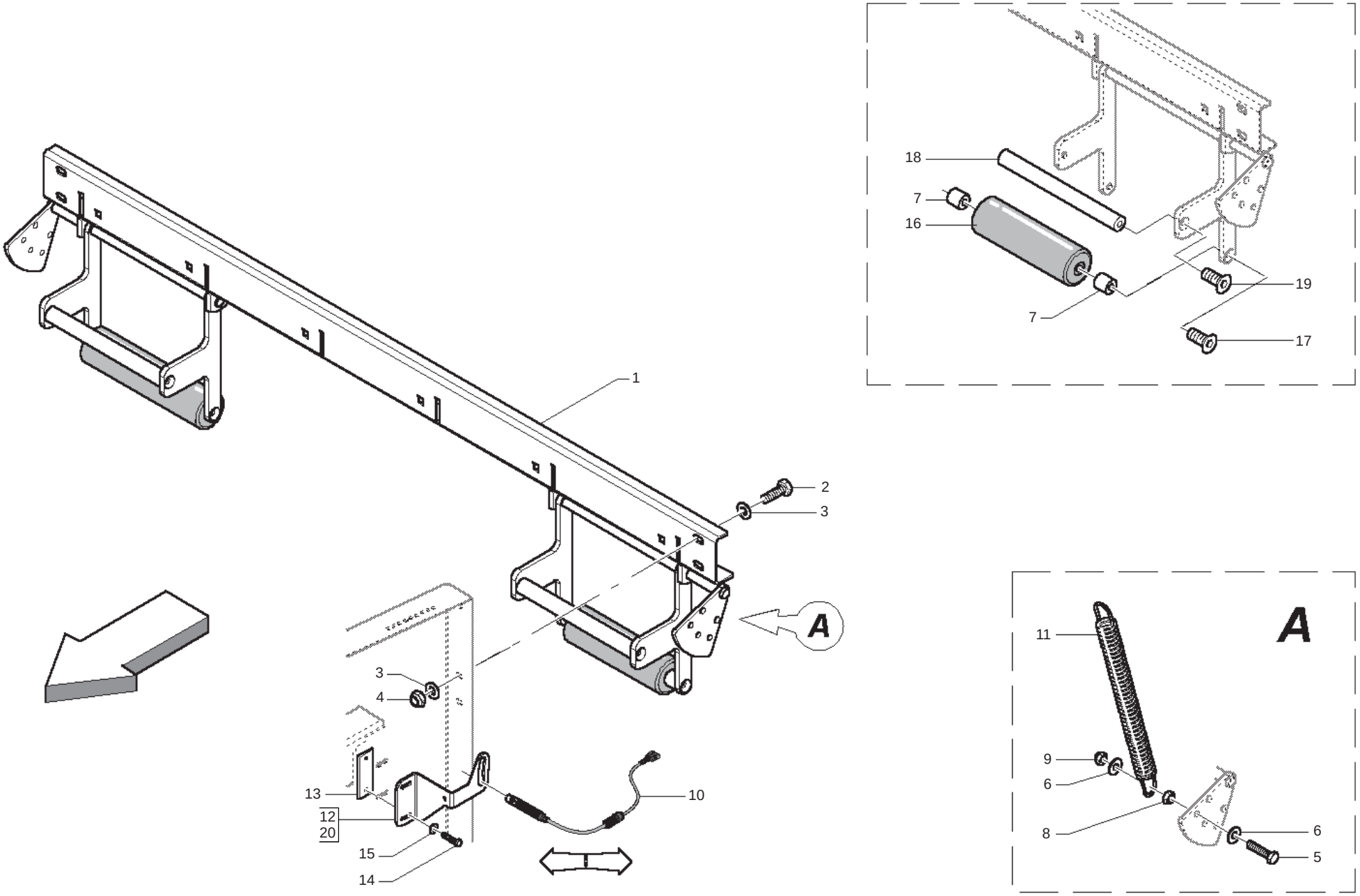

MASCHIO

cod. B0D5P0108

SEGNALATORI DI CARICAMENTO
LOADER INDICATORS

TAV_025

Pos.	Cod.	Descrizione	Description	Description	Benennung	Descripcion
1	B07SP0023	SEGNALATORI LT	LT INDICATORS	INDICATEUR LT	ANZEIGER LT	
2	F01020472	VITE M10X1,5X25 U5739 8.8ZN	SCR. M10X1,5X25 U5739 8.8ZN	VIS M10X1,5X25 U5739 8.8 ZN	SCHRAUBE M10X1,5X25 U5739 8.8	TORNILLO 10X25 U5739 8.8 ZN
3	F01410062	ROS.M10 10,5X 18X 2 U6592 ZN	WASHER M10 10,5X 18X 2 U6592	RONDELLE M10 10,5X18X2 ZN	DICHTUNGSRING M10 10,5X18X2 ZN	RONDANA M10 10,5X18X2 ZN
4	F01230202	DADO M10X1,25 D985 8 ZN	SELF-LOCKING NUT	ECROU NYLSTOP	SELBSTSICHERNDE MUTTER M10-5S	
5	F01020413	VITE M6X1X40 U5739 8.8ZN	SCR. M6X1X40 U5739 8.8ZN	VIS M 6X1X40	SCHRAUBE M 6X1X40	TORNILLO M 6X1X40
6	F01420035	ROS.M6 6,4X 18X1,6 U6593 ZN	WASHER	RONDELLE	SCHEIBE	
7	B013P0043	DISTANZIALE RULLO SEGNALATORE	WARNING ROLLER SPACER			
8	F01200232	DADO M6X1 U5588 CL8 ZN	NUT M6X1 U5588 6.8ZN	ECROU 6 UNI 5588 6.8 ZN	MUTTER 6 UNI 5588 6.8 ZN	TUERCA 6 UNI 5588 6.8 ZN
9	B00920106	DADO M6X1 D985 8ZN	NUT	ECROU	SELBSTSICHERNDE MUTTER M6-5S	
10	B0E0P0013	SENS DIG.SCATOLA E BILANCERE	DIGITAL SENSOR PROXIMITY M12	CAPTEUR DIGITAL AVEC PROXIMITY	SENSOR MIT PROXIMITY M 12	
11	B01810409	MOLLA T FILO D.2,5 DP14,5 L210	SPRING	RESSORT	T- FEDER	
12	B0C4P0031	ATTACCO POTENZIOMETRO SX LT	LT LEFT POTENTIOMETER CONNECT			
13	B0C004008	PIASTRINA FINECORSA	LIMIT SWITCH PLATE	PLAQUETTE FIN DE COURSE	ENDSCHALTERPLATTE	
14	F01020378	VITE M5X0,8X16 U5739 8.8ZN	SCR. M5X0,8X16 U5739 8.8ZN	VIS M5X0,8X16 U5739 8.8ZN	SCHRAUBE M5X0,8X16 U5739 8.8ZN	TORNILLO M5X0,8X16 U5739 8.8ZN
15	F01420023	ROS.M5 5,3X 15X1,5 U6593 ZN	WASHER M5 5,3X 15X1,5 U6593			
16	B07M00276	RULLO SEGNALATORE	INDICATOR ROLLER	ROULEAU SIGNALEUR	ANZEIGEROLLE	
17	F01030060	VITE M8X1,25X35 U5933 10.9ZD	SCREW M8X1,25X35 U5933 10.9ZD	VIS M8X1,25X35 U5933 10.9ZD	SCHRA.M8X1,25X35 U5933 10.9ZD	TORN. M8X1,25X35 U5933 10.9ZD
18	B035P0020	COLLEGAMENTO LT	CONNECTION LT			
19	B00440820	VITE TSPEI M 8X 20-10.9 UNI 5	SCREW	VIS	SCHRAUBE TSPEI M8X 20-10.9	
20	B0C4P0032	ATTACCO POTENZIOMETRO DX LT	LT RIGHT POTENTIOMETER CONNECT	ATTELAGE POTENTIOMETRE DROIT	POTENTIOMETERANSCHLUSS	

TAV_029

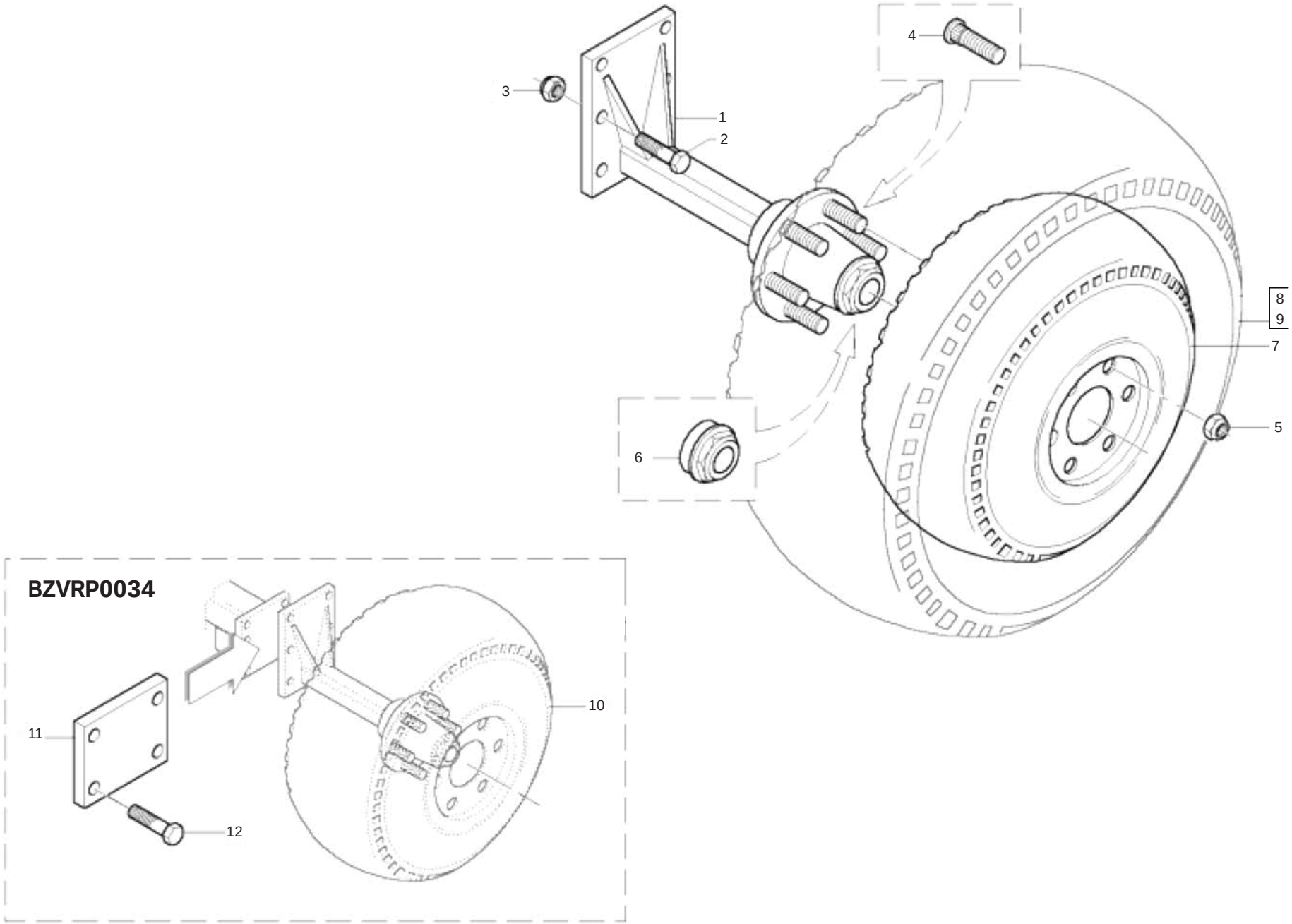

RUOTE
WHEELS

TAV_029

Pos.	Cod.	Descrizione	Description	Description	Benennung	Descripcion
1	B07100026	MOZZO CON FUSELLO E PIASTRA	HUB WITH STUB AXLE	MOYEU AVEC AXE ET PLAQUE	NABE MIT ACHSSCHENKEL	
2	F01020309	VITE M20X2,5X70 U5737 8.8ZN	SCR. M20X2,5X70 U5737 8.8ZN	VIS M20X2,5X70	SCHRAUBE M20X2,5X70	TORNILLO M20X2,5X70
3	F01230259	DADO AUTOB.BASSO M20 8 D985 ZN	NUT	ECROU	SELBSTSICHERNDE MUTTER M20-5S	
4	B0R000273	COLON.M18X1,5 FUSELLO 7100014	WHEEL STUD BOLT M18X1,5	COLONNETTE M18X1,5 FUSEE 7100	RADBOLZEN M18X1,5	
5	B00821318	DADO E SFERICO M18X1,5 ZINC.	NUT	ECROU	KUGELMUTTER M18X1,5	
6	B07100050	TAPPO PARAPOLVERE 80 NEUTRO	CAP	BOUCHON	PROPFEN	
7	B07100022	RUOTA CPLTA 400-15.5 6F P 14PR	COMPLETE WHEEL	ROUE 400-15.5	RAD KOMPLETT 400.15.5 6F P14PR	
8	B07100013	RUOTA CPLTA 11,5 80-15,3 6F P	COMPLETE WHEEL 11,5 80-15,3	ROUE COMPLETE 11,5 80-15,3	KOMPLETTES RAD 11,5 80-15,3	
9	B07100039	RUOTA CPLTA 500 55-20 6F P12PR	COMPLETE WHEEL	ROUE COMPLETE	KOMPLETTES RAD 500 55	
10	B07100041	RUOTA CPLTA 19.0 45-176F P14PR	COMPLETE TYRE	ROUE COMPLETE	KOMPLETTES RAD 19,0 45-17	
11	B0C003765	PIASTRA DI SPESSORAMENTO	SHIM PLATE	PLAQUE	DICHTUNGSPLATTE	
12	F01020987	VITE M20X2,5X90 U5737 8.8 ZN	GALV.SCR.M20X2,5X90 U5737 8.8			

TAV_345

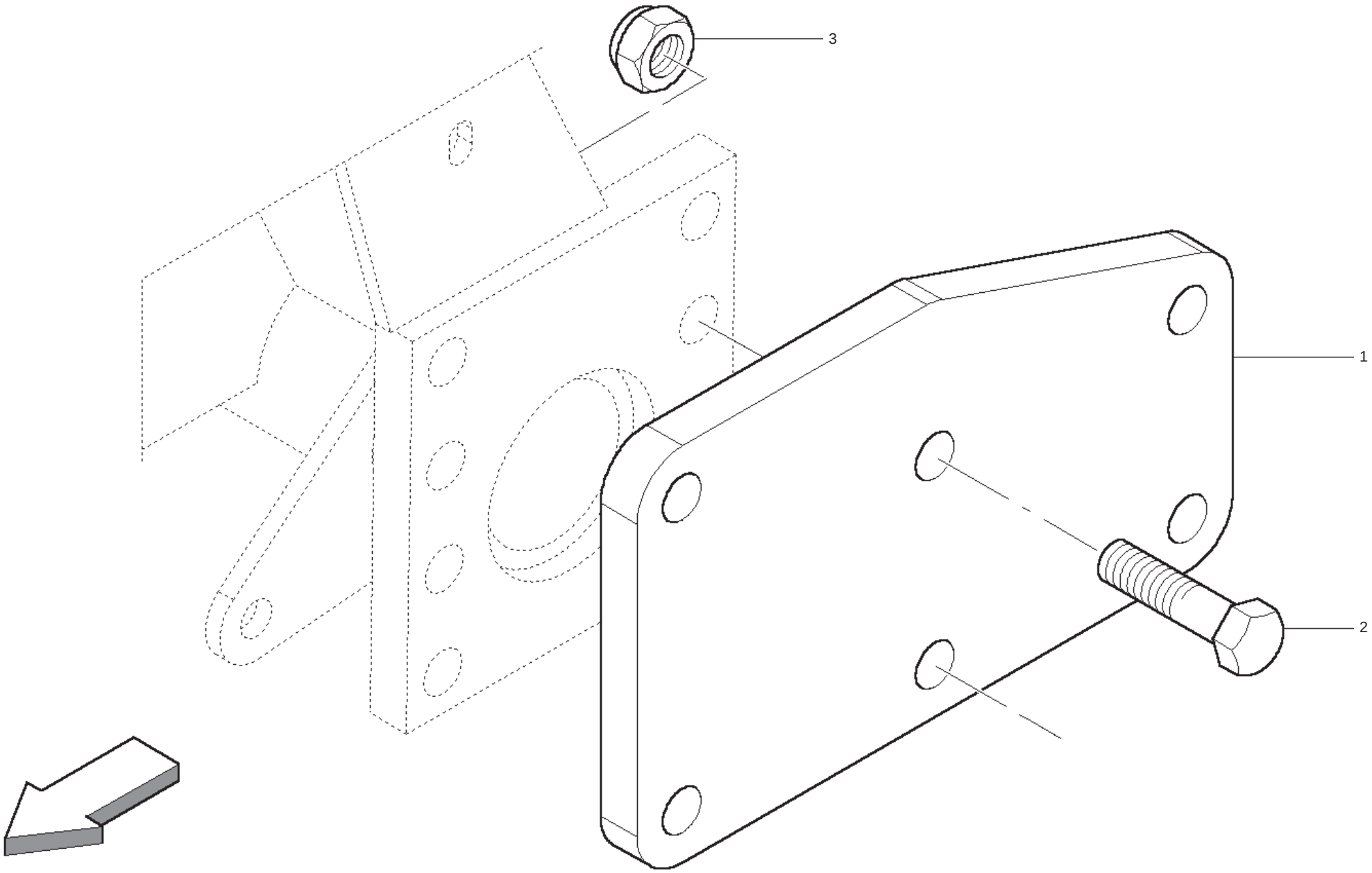

MASCHIO

cod. B0D5P0108

SPESSORE RUOTE
WHEEL THICKNESS

TAV_345

Pos.	Cod.	Descrizione	Description	Description	Benennung	Descripcion
1	B0C1P0041	CERNIERA ANTER. DX CARTER LATE	HINGE ANTERERIORE			
2	B00182090	VITE ZN.TE M20X90-8.8 UNI5739	SCREW ZN.TE M20X90-8.8 UNI5739			
3	B00920620	DADO AUTOB.BASSO M20 8 D985 ZN	NUT	ECROU	SELBSTSICHERNDE MUTTER M20-5S	

TAV_035

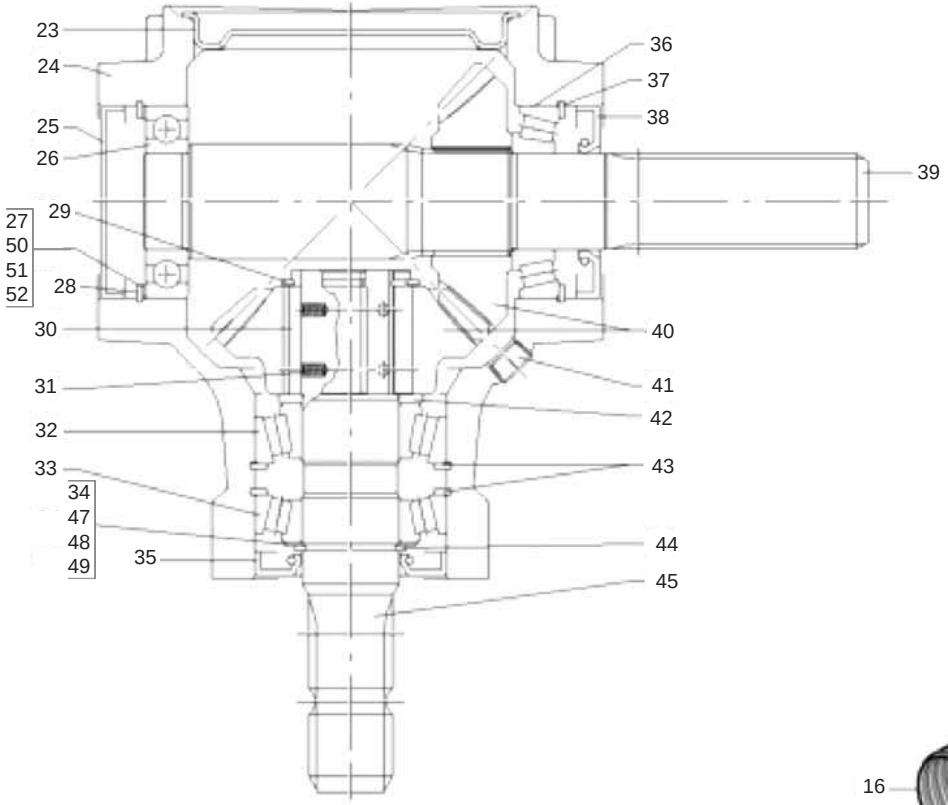
23
24
25
26
27
50
51
52
28
29
30
31
32
33
34
47
48
49
35
36
37
38
39
40
41
42
43
44
45

540

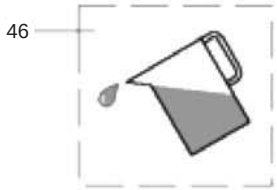
46

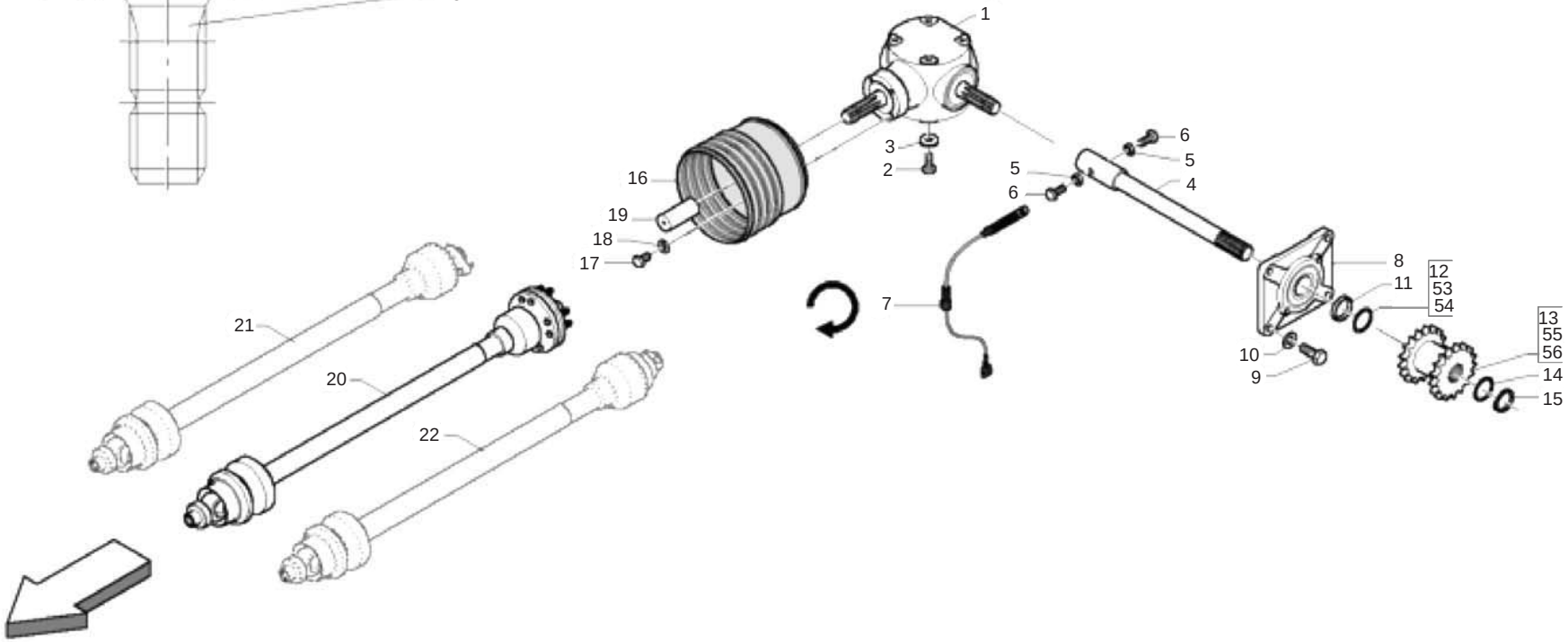
1
2
3
4
5
6
7
8
9
10
11
12
53
54
13
55
56
14
15
16
17
18
19
20
21
22

SCATOLA DI TRASMISSIONE
GEARBOX

TAV_035

Pos.	Cod.	Descrizione	Description	Description	Benennung	Descripcion
1	B03900177	SCAT.BP 2050-1 1-RL-S ALB.	GEAR BOX	BOITE	GETRIEBE BYPY 2050	
2	F01020512	VITE M12X1,75X35 U5739 8.8ZN	SCR. M12X1,75X35 U5739 8.8ZN	VIS M12X1,75X35 5739 8.8 ZN	SCHR. M12X1,75X35 5739 8.8 ZN	TORN. M12X1,75X35 5739 8.8 ZN
3	B01516038	RALLA 13 32 5	FIFTH WHEEL	BUTEE	SCHEIBE	
4	B0R000304	ALBERO PROLUNGA L=602	EXTENSION SHAFT L=602	ARBRE RALLONGE L=602	VERLAENGERUNGSWELLE L=602	
5	F01200232	DADO M6X1 U5588 CL8 ZN	NUT M6X1 U5588 6.8ZN	ECROU 6 UNI 5588 6.8 ZN	MUTTER 6 UNI 5588 6.8 ZN	TUERCA 6 UNI 5588 6.8 ZN
6	B00180625	VITE M6X1X 25 U5739 8.8ZN	SCREW	VIS	SCHRAUBE	
7	B0E0P0013	SENS DIG.SCATOLA E BILANCERE	DIGITAL SENSOR PROXIMITY M12	CAPTEUR DIGITAL AVEC PROXIMITY	SENSOR MIT PROXIMITY M 12	
8	B02700051	SUPPORTO FLANGIATO	FLANGED SUPPORT	SUPPORT EMBOUTI	FLANSCHLAGER	
9	F01020512	VITE M12X1,75X35 U5739 8.8ZN	SCR. M12X1,75X35 U5739 8.8ZN	VIS M12X1,75X35 5739 8.8 ZN	SCHR. M12X1,75X35 5739 8.8 ZN	TORN. M12X1,75X35 5739 8.8 ZN
10	F01410076	ROS.M12 13X 20X2,0 U1749 ZN	WASHER	RONDELLE	SCHEIBE	
11	B01329469	DISTANZIALE 40X48X 7	SPACER	ENTRETOISE	DISTANZSTUECK 40X48X7	
12	B01300125	SPES. 40 48 0,5 ZINCATO	SHIM GALV	ENTRETOISE GALV	DISTANZSTUECK 40 48 0,5	
13	B03400224	INGR.DOPPIO Z=12 12-1 SCATOLA	DOUBLE GEAR Z=12 12-1	ENGRENAGE DOUBLE	DOPPEL ZAHNRAD Z=12 12-1	
14	B01300151	SPES. 40 48 2 ZINCATO	SHIM	ENTRETOISE	DISTANZSTUECK 40 48 2	
15	B01700040	ANEL. D ARR. ALBERO 40-E UNI 3	SEEGER RING	BAGUE SEEGER	SEEGERRING 40-E	
16	B07V00076	CONTROCUFFIA CPLTA SFT 3950	COMPLETE COUNTER-HOUSING	CONTRE-BOL COMPLETE SFT-BYPY	GEGENHAUBE	
17	F01020472	VITE M10X1,5X25 U5739 8.8ZN	SCR. M10X1,5X25 U5739 8.8ZN	VIS M10X1,5X25 U5739 8.8 ZN	SCHRAUBE M10X1,5X25 U5739 8.8	TORNILLO 10X25 U5739 8.8 ZN
18	F01410062	ROS.M10 10,5X 18X 2 U6592 ZN	WASHER M10 10,5X 18X 2 U6592	RONDELLE M10 10,5X18X2 ZN	DICHTUNGSRING M10 10,5X18X2 ZN	RONDANA M10 10,5X18X2 ZN
19	G19002131	PROTEZIONE P.D.P.	PDP GUARD			
20	B03600120	CAR BO4 Z6-Z6 OMFRZ 1350 L1577	PTO BO4 Z6-Z6 OMFRZ 1350 L1577	CARDAN	GELENKWELLE T.BYPY654 OC F	
21	B03600049	CAR BO7 Z6-Z6 OMBUL 2700 L1510	PTO BO7 Z6-Z6 OMBUL 2700 L1510	CARDAN TRACTEUR FF20-50	GELENKWELLE	
22	B03600092	CAR BO7 Z6-Z6 OMCAM 2500 L1589	PTO BO7 Z6-Z6 OMCAM 2500 L1589	CARDAN	TRAKTOR KARDAN BYPY656	
23	B0R000255	COPERCHIO SCATOLA D=130	BOX CAP	COUVERCLE BOITE D=130	GETRIEBEGEHAUSEDECKEL	
24	B0R000305	CORPO SCATOLA 2050	BOX 2050			
25	B0R000090	CAPPELLOTTO 80X10	SEAL 80X10	CAPOUCHON 80X10	KAPPE 80X10	
26	B02004018	CUSCINETTO 6208 CAT.A-ST004	BEARING	ROULEMENT	LAGER	
27	B0R000262	ANELLO SPES. 69,3X79,7X0,2	SHIM RING 69,3X79,7X0,2	BAGUE EPAISSEUR 69,3X79,7X0,2	RING 69,3X79,7X0,2	
28	B0R000256	ANELLO ELASTICO 80-I SP=2,5	ELASTIC RING 80-I SP=2,5	BAGUE RESSORT 80-I SP=2,5	ELASTISCHER RING	
29	B0R000298	ANELLO ELASTICO 50-E SP=2,0	RETAINING RING 50-E SP=2,0	BAGUE RESSORT 50-E SP=0,8	RING EL. 50-E	
30	B0R000307	PIASTR. RL 29870	RL PLATE	PLAQUETTE RL	PLATTE RLL	
31	B0R000089	MOLLA CONF DA 08 PZ	SPRING	RESSORT	FEDER	
32	B02124024	CUSC. 32208 CAT.A-ST004	BEARING	ROULEMENT	LAGER	
33	B02124019	CUSC. 30208 CAT.A-ST004	BEARING	ROULEMENT	LAGER	
34	B0R000261	ANELLO SPES. 40,2X54,8X0,1	SHIM RING 40,2X54,8X0,1	BAGUE EPAISSEUR 40,2X54,8X0,1	DISTANZRING 40,2X54,8X0,1	
35	F03010277	ANELLO T.AS 40X 80X10 D3760NBR	OIL SEAL 40X80X10 NBR	BOURAGE 40X80X10 NBR	OELABDICHTUNG 40X80X10 NBR	JUNTA DE ACEITE 40X80X10 NBR
36	B02124019	CUSC. 30208 CAT.A-ST004	BEARING	ROULEMENT	LAGER	
37	B0R000256	ANELLO ELASTICO 80-I SP=2,5	ELASTIC RING 80-I SP=2,5	BAGUE RESSORT 80-I SP=2,5	ELASTISCHER RING	
38	F03010277	ANELLO T.AS 40X 80X10 D3760NBR	OIL SEAL 40X80X10 NBR	BOURAGE 40X80X10 NBR	OELABDICHTUNG 40X80X10 NBR	JUNTA DE ACEITE 40X80X10 NBR
39	B0R000975	ALBERO SCAT.EXTREME HT	BOX SHAFT FOR EXTREME HT	ARBRE BOITE EXTREME HT	WELLE	
40	B0R000308	COPPIA CONICA R=1 1	R=1 1 BEVEL GEAR PAIR	COUPLE CONIQUE R=1 1	ZAHNRADPAAR R=1 1	
41	B0R000175	TAPPO 3 8 GAS-C DIN 906	PLUG	BOUCHON 3 8 GAS-C DIN 906	VERSCHLUSS DECKER 3 8 GAS-C	
42	B0R000285	DISTANZIALE	SPACER	ENTRETOISE	DISTANZSTUECK	
43	B0R000256	ANELLO ELASTICO 80-I SP=2,5	ELASTIC RING 80-I SP=2,5	BAGUE RESSORT 80-I SP=2,5	ELASTISCHER RING	
44	B0R000257	ANELLO ELASTICO 40-E SP=2,5	ELASTIC RING 40-E SP=2,5	BAGUE RESSORT 40-E SP=2,5	ELASTISCHER RING	
45	B0R000306	ALBERO ASSE Z R.L.	AXLE SHAFT Z R.L.	ARBRE AXE Z RL	ACHSWELLE Z R.L.	
46	F03260016	OLIO AGIP BLASIA 150	OIL AGIP BLASIA 150			
47	B0R000260	ANELLO SPES. 40,2X54,8X0,4	SHIM RING 40,2X54,8X0,4	BAGUE EPAISSEUR 40,2X54,8X0,4	DISTANZRING 40,2X54,8X0,4	
48	B0R000259	ANELLO SPES. 40,2X54,8X0,3	SHIM RING 40,2X54,8X0,3	BAGUE EPAISSEUR 40,2X54,8X0,3	ELASTISCHER RING	
49	B0R000258	ANELLO SPES. 40,2X54,8X0,2	SHIM RING 40,2X54,8X0,2	BAGUE EPAISSEUR 40,2X54,8X0,2	ELASTISCHER RING	
50	B0R000263	ANELLO SPES. 69,3X79,7X0,3	SHIM RING 69,3X79,7X0,3	BAGUE EPAISSEUR 69,3X79,7X0,3	SCHEIBE 69,3X79,7X0,3	
51	B0R000264	ANELLO SPES. 69,3X79,7X0,4	SHIM RING 69,3X79,7X0,4	BAGUE EPAISSEUR 69,3X79,7X0,4	DISTANZRING 69,3X79,7X0,4	
52	B0R000265	ANEL SPES. 69,3X79,7X0,1 34006	SHIM RING 69,3X79,7X0,1 34006	BAGUE EPAISSEUR 69,3X79,7X0,1	RING 69,3X79,7X0,1	
53	B01300151	SPES. 40 48 2 ZINCATO	SHIM	ENTRETOISE	DISTANZSTUECK 40 48 2	
54	B01300126	SPES. 40 48 1 ZINC.ST_013	SHIM	ENTRETOISE	DISTANZSTUECK 40 408 1	
55	B01300125	SPES. 40 48 0,5 ZINCATO	SHIM GALV	ENTRETOISE GALV	DISTANZSTUECK 40 48 0,5	
56	B01300126	SPES. 40 48 1 ZINC.ST_013	SHIM	ENTRETOISE	DISTANZSTUECK 40 408 1	

TAV_040

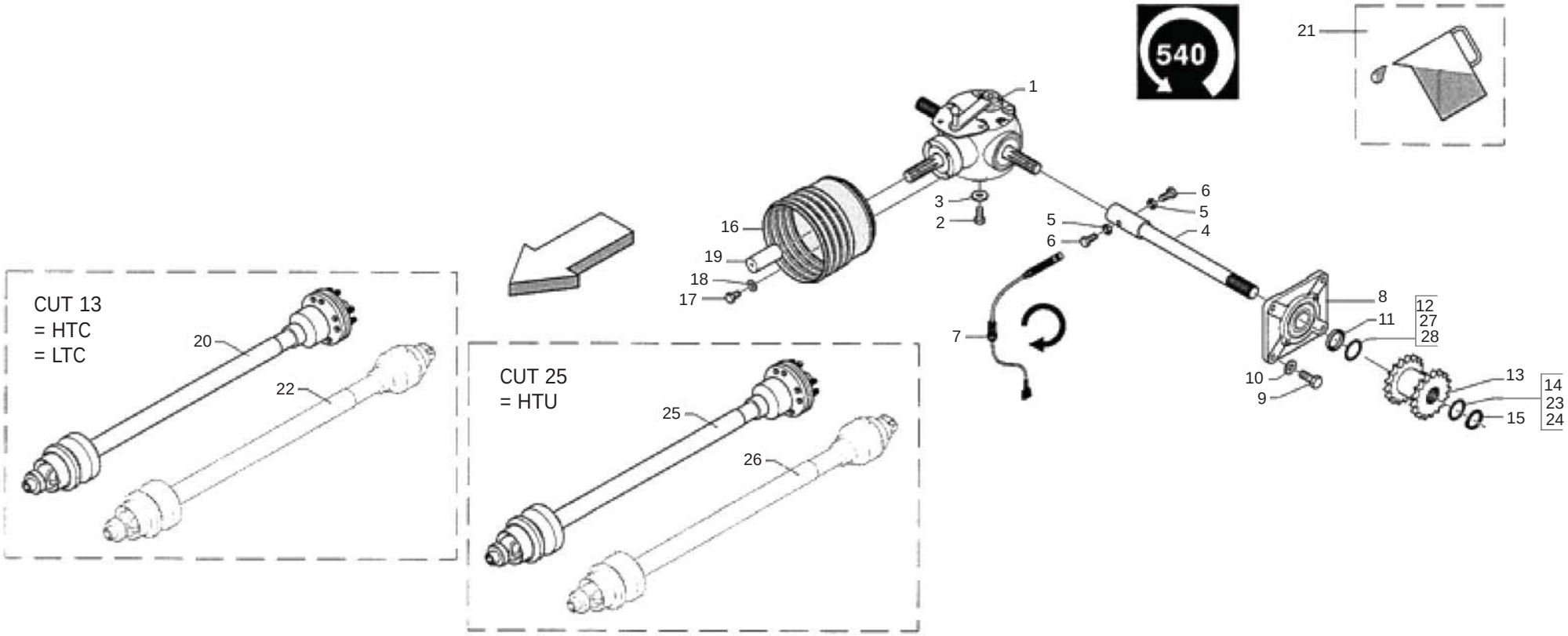
540
1
2
3
4
5
6
7
8
9
10
11
12
13
14
15
16
17
18
19
20
21
22
23
24
25
26
27
28
CUT 13
= HTC
= LTC
CUT 25
= HTU

SCATOLA DI TRASMISSIONE PTO
GEARBOX PTO

TAV_040

Pos.	Cod.	Descrizione	Description	Description	Benennung	Descripcion
1	B03900179	SCAT.BP 2070-1 1-RL-DIS S.ALB.	GEAR BOX	BOITE	GETRIEBE BYPY 2070	
2	F01020540	VITE M14X2X30 U5739 8.8ZN	SCR. M14X2X30 U5739 8.8ZN	VIS M14X2X30 U5739 8.8ZN	SCHRAUBE M14X2X30 U5739 8.8ZN	TORNILLO M14X2X30 U5739 8.8ZN
3	B01516040	RALLA 15 42 6	FIFTH WHEEL	BUTEE	SCHEIBE	
4	B0R000304	ALBERO PROLUNGA L=602	EXTENSION SHAFT L=602	ARBRE RALLONGE L=602	VERLAENGERUNGSWELLE L=602	
5	F01200232	DADO M6X1 U5588 CL8 ZN	NUT M6X1 U5588 6.8ZN	ECROU 6 UNI 5588 6.8 ZN	MUTTER 6 UNI 5588 6.8 ZN	TUERCA 6 UNI 5588 6.8 ZN
6	B00180625	VITE M6X1X 25 U5739 8.8ZN	SCREW	VIS	SCHRAUBE	
7	B0E0P0013	SENS DIG.SCATOLA E BILANCERE	DIGITAL SENSOR PROXIMITY M12	CAPTEUR DIGITAL AVEC PROXIMITY	SENSOR MIT PROXIMITY M 12	
8	B02700051	SUPPORTO FLANGIATO	FLANGED SUPPORT	SUPPORT EMBOUTI	FLANSCHLAGER	
9	F01020512	VITE M12X1,75X35 U5739 8.8ZN	SCR. M12X1,75X35 U5739 8.8ZN	VIS M12X1,75X35 5739 8.8 ZN	SCHR. M12X1,75X35 5739 8.8 ZN	TORN. M12X1,75X35 5739 8.8 ZN
10	F01410076	ROS.M12 13X 20X2,0 U1749 ZN	WASHER	RONDELLE	SCHEIBE	
11	B01329469	DISTANZIALE 40X48X 7	SPACER	ENTRETOISE	DISTANZSTUECK 40X48X7	
12	B01300126	SPES. 40 48 1 ZINC.ST_013	SHIM	ENTRETOISE	DISTANZSTUECK 40 408 1	
13	B03400224	INGR.DOPPIO Z=12 12-1 SCATOLA	DOUBLE GEAR Z=12 12-1	ENGRENAGE DOUBLE	DOPPEL ZAHNRAD Z=12 12-1	
14	B01300125	SPES. 40 48 0,5 ZINCATO	SHIM GALV	ENTRETOISE GALV	DISTANZSTUECK 40 48 0,5	
15	B01700040	ANEL. D ARR. ALBERO 40-E UNI 3	SEEGER RING	BAGUE SEEGER	SEEGERRING 40-E	
16	B07V00076	CONTROCUFFIA CPLTA SFT 3950	COMPLETE COUNTER-HOUSING	CONTRE-BOL COMPLETE SFT-BYPY	GEGENHAUBE	
17	B00181015	VITE M10X1,5 X 16 U5739 8.8ZN	SCREW	VIS	SCHRAUBE	
18	F01410062	ROS.M10 10,5X 18X 2 U6592 ZN	WASHER M10 10,5X 18X 2 U6592	RONDELLE M10 10,5X18X2 ZN	DICHTUNGSRING M10 10,5X18X2 ZN	RONDANA M10 10,5X18X2 ZN
19	G19002131	PROTEZIONE P.D.P.	PDP GUARD			
20	B03600076	CAR BO7 Z6-Z6 OMFRZ 1700 L1546	PTO BO7 Z6-Z6 OMFRZ 1700 L1546	CARDAN	GELENKWELLE	
21	F03260016	OLIO AGIP BLASIA 150	OIL AGIP BLASIA 150			
22	B03600092	CAR BO7 Z6-Z6 OMCAM 2500 L1589	PTO BO7 Z6-Z6 OMCAM 2500 L1589	CARDAN	TRAKTOR KARDAN BYPY656	
23	B01300126	SPES. 40 48 1 ZINC.ST_013	SHIM	ENTRETOISE	DISTANZSTUECK 40 408 1	
24	B01300151	SPES. 40 48 2 ZINCATO	SHIM	ENTRETOISE	DISTANZSTUECK 40 48 2	
25	B03600087	CAR BO7 Z6-Z6 OMBUL 2900 L1510	PTO BO7 Z6-Z6 OMBUL 2900 L1510	CARDAN	GELENKWELLE	
26	B03600093	CAR BO7 Z6-Z6 OMCAM 2900 L1589	PTO BO7 Z6-Z6 OMCAM 2900 L1589	CARDAN	GELENKWELLE	
27	B01300151	SPES. 40 48 2 ZINCATO	SHIM	ENTRETOISE	DISTANZSTUECK 40 48 2	
28	B01300125	SPES. 40 48 0,5 ZINCATO	SHIM GALV	ENTRETOISE GALV	DISTANZSTUECK 40 48 0,5	

TAV_045

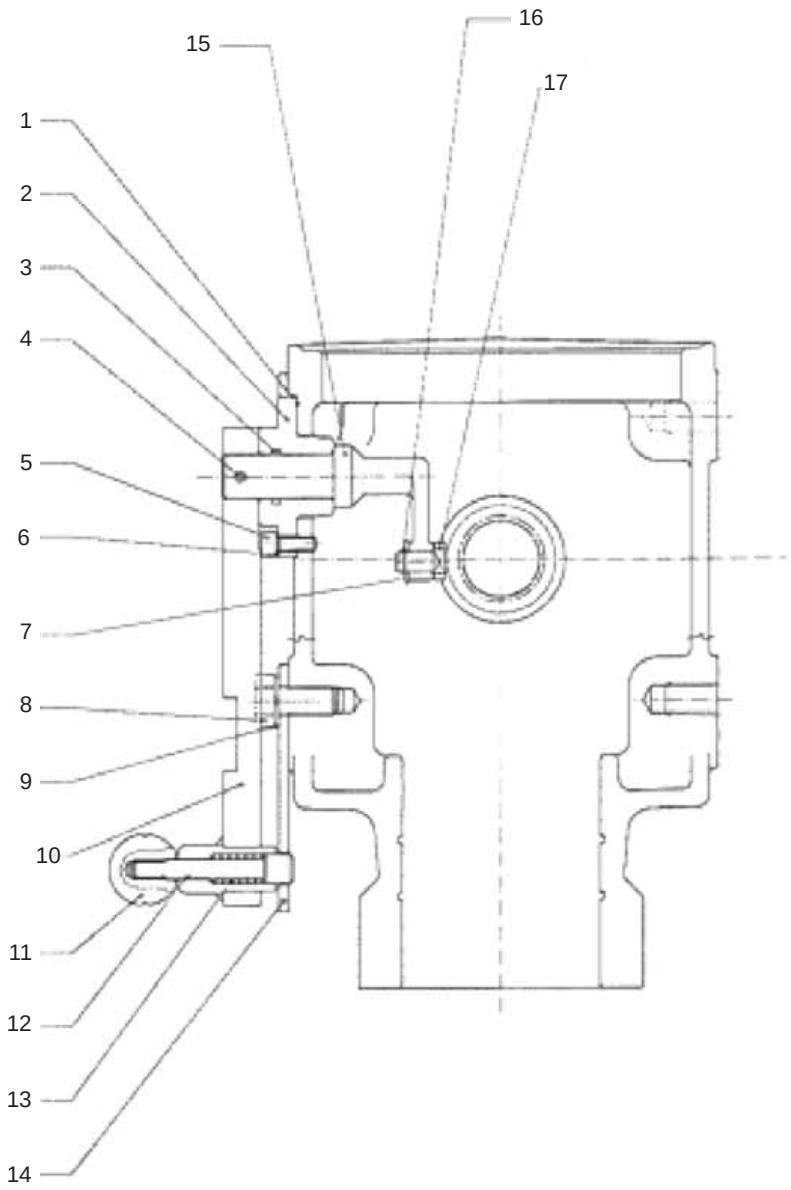

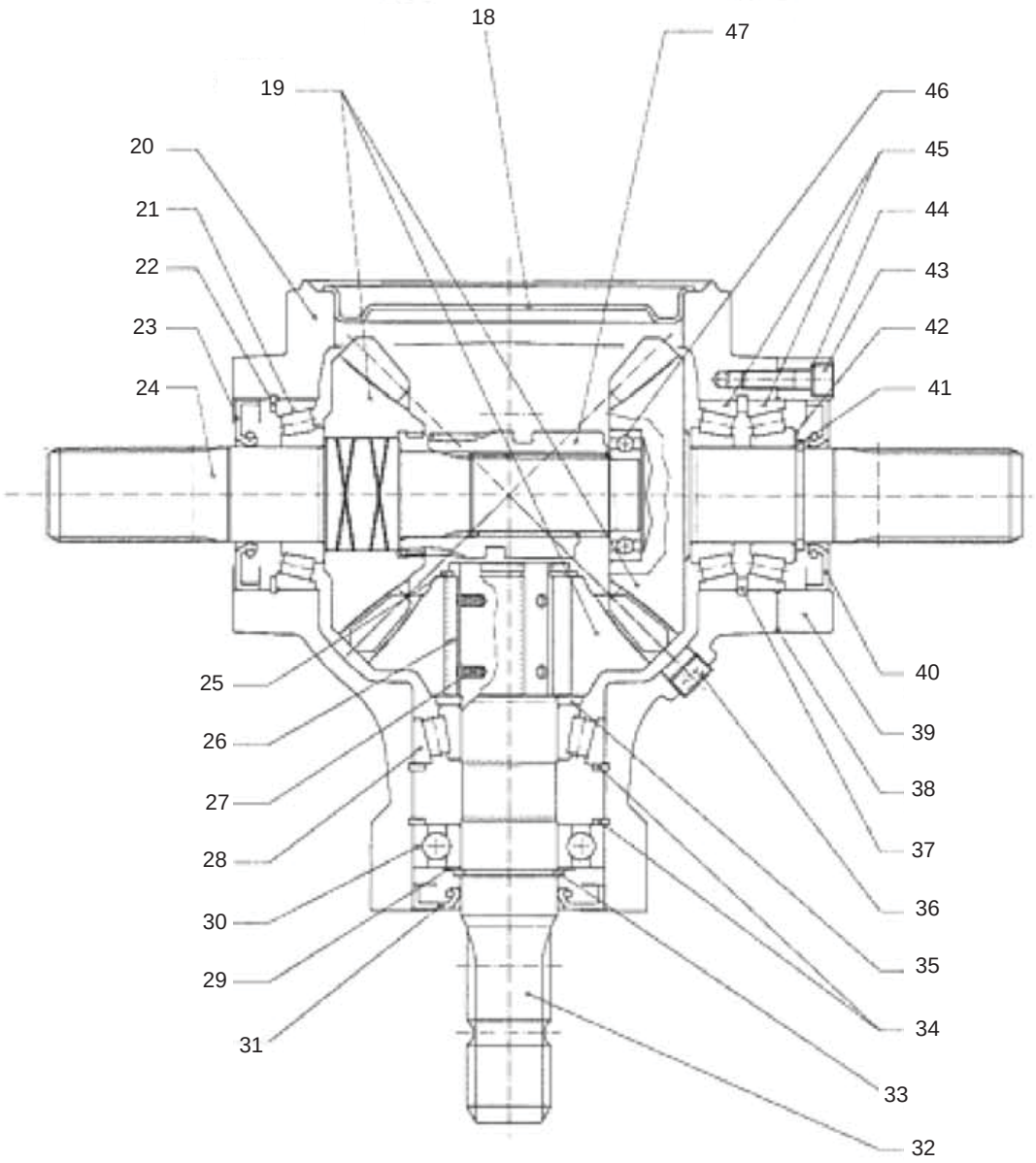

MASCHIO

cod. B0D5P0108

ESPLOSO SCATOLA DI TRASMISSIONE
GEARBOX PARTS

TAV_045

Pos.	Cod.	Descrizione	Description	Description	Benennung	Descripcion
1	B0R000284	GUARNIZIONE 35X65X0,2	PACKING 35X65X0,2	JOINT 35X65X0,2	DICHTUNG 35X65X0,2	
2	B0R000283	SUPP. LEVA	LEVER SUPPORT	SUPPORT LEVIER	HEBELTRAGER	
3	B0R000300	ANELLO TORICO OR 123	OR RING 123	BAGUE TORIQUE OR 123	OR RING 123	
4	F02100090	SPINA E.P. 5X 40 U6873 C70 BR	ELASTIC PIN 5X40	GOUJON ELASTIQUE 5X40	SPANNHUELSE 5X40	ESPINA ELASTICA 5X40
5	B0R000292	VITE TCEI M 6X 16-12.9	SCREW TCEI M 6X 16-12.9	VIS TCEI M 6X16-12.9	SCHRAUBE TCEI M6X16-12.9	
6	B0R000295	RONDELLA SICUR.D=6 SCHNORR	LOCK WASHER D=6 SCHNORR	RONDELLE SECURETE D=6 SCHNORR	BEILAGSSCHEIBE D=6	
7	B0R000293	RONDELLA PIANA D=8 UNI6592	PLAIN WASHER D=8 UNI6592	RONDELLE PLANE D=8 UNI6592	BEILAGSSCHEIBE PLATTE D-8	
8	F01020508	VITE M12X1,75X 25 U5739 8.8ZN	SCREW	VIS	SCHRAUBE	
9	B0R000294	RONDELLA ELAST.D=12 DIN128B	SPRING WASHER D=12 DIN128B	RONDELLE ELASTIQUE D=12 DIN128	ELASTICHER BEILAGSSCHEIBE D=12	
10	B0R001073	LEVA EST. INVERTITORE	LEVER REVERSE EXTERNAL			
11	B0R000302	IMPUGNATURA A SFERA	BALL HANDLE	BRANCHE A SPHERE	KUGELGRIFF	
12	B0R001074	PERNO SCATOLA 3900179	PIN			
13	B0R000301	MOLLA DM 9,8X1,2X25	SPRING DM 9,81X1,2X25	RESSORT DM 9,8X1,2X25	FEDER DM9,8X1,2X25	
14	B0R000281	SELETTORE DISINNESTO	SELECTOR DISENGAGEMENT	SELECTEUR DEBRAYAGE	AUSLOSUNGSANWAHLER	
15	B0R000282	LEVA COM. DISINNESTO	LEVER RELEASE	LEVIER COM. DEBRAYAGE	AUSLOSERHEBEL	
16	B0R000297	ANELLO ELASTICO 8-E SP=0,8	RETAINING RING 8-E SP=0,8	BAGUE RESSORT 8-E SP=0,8	RING EL. 8-E	
17	B0R000290	PATTINO	SLIDING BLOCK	CALE	SCHUH	
18	B0R000288	COPERCHIO D=145	COVER D=145	COUVERCLE D=145	DECKEL D=145	
19	B0R000303	TERNA CONICA R=1.1	BEVEL GEAR TRIAL R=1.1	TERNE CONIQUE R=1,1	TRIPPELZAHNRAD R=1.1	
20	B0R000277	SCATOLA 2070	BOX 2070			
21	B02124019	CUSC. 30208 CAT.A-ST004	BEARING	ROULEMENT	LAGER	
22	B0R000256	ANELLO ELASTICO 80-I SP=2,5	ELASTIC RING 80-I SP=2,5	BAGUE RESSORT 80-I SP=2,5	ELASTISCHER RING	
23	F03010277	ANELLO T.AS 40X 80X10 D3760NBR	OIL SEAL 40X80X10 NBR	BOURAGE 40X80X10 NBR	OELABDICHTUNG 40X80X10 NBR	JUNTA DE ACEITE 40X80X10 NBR
24	B0R000279	ALBERO ASSE XY	AXIS SHAFT	ARBRE AXE XY	ACHSWELLE	
25	B0R000298	ANELLO ELASTICO 50-E SP=2,0	RETAINING RING 50-E SP=2,0	BAGUE RESSORT 50-E SP=0,8	RING EL. 50-E	
26	B0R000289	PIASTRINA RL	RL PLATE	PLAQUE RL	SCHEIBE RL	
27	B0R000089	MOLLA CONF DA 08 PZ	SPRING	RESSORT	FEDER	
28	B02124024	CUSC. 32208 CAT.A-ST004	BEARING	ROULEMENT	LAGER	
29	B02004018	CUSCINETTO 6208 CAT.A-ST004	BEARING	ROULEMENT	LAGER	
30	B0R001071	ANELLO SPESSORE 40,2X54,8X0,2	RING THICKNESS 40,2X54,8X0,2			
31	F03010277	ANELLO T.AS 40X 80X10 D3760NBR	OIL SEAL 40X80X10 NBR	BOURAGE 40X80X10 NBR	OELABDICHTUNG 40X80X10 NBR	JUNTA DE ACEITE 40X80X10 NBR
32	B0R000278	ALBERO ASSE Z R.L.	AXIS SHAFT	ARBRE AXE Z R.L.	ACHSWELLE	
33	B0R000257	ANELLO ELASTICO 40-E SP=2,5	ELASTIC RING 40-E SP=2,5	BAGUE RESSORT 40-E SP=2,5	ELASTISCHER RING	
34	B0R000256	ANELLO ELASTICO 80-I SP=2,5	ELASTIC RING 80-I SP=2,5	BAGUE RESSORT 80-I SP=2,5	ELASTISCHER RING	
35	B0R000285	DISTANZIALE	SPACER	ENTRETOISE	DISTANZSTUECK	
36	B0R000175	TAPPO 3 8 GAS-C DIN 906	PLUG	BOUCHON 3 8 GAS-C DIN 906	VERSCHLUSS DECKER 3 8 GAS-C	
37	B0R000299	ANELLO ELASTICO 80-I SP=4,0	RETAINING RING 80-I SP=4,0	BAGUE RESSORT 80-I SP=4,0	RING EL. 80-I	
38	B0R000287	GUARNIZIONE 80X115X0,3	PACKING 80X115X0,3	JOINT 80X115X0,3	DICHTUNG 80X115X0,3	
39	B0R001070	DISTANZIALE PORTA ANELLO	SPACER			
40	F03010277	ANELLO T.AS 40X 80X10 D3760NBR	OIL SEAL 40X80X10 NBR	BOURAGE 40X80X10 NBR	OELABDICHTUNG 40X80X10 NBR	JUNTA DE ACEITE 40X80X10 NBR
41	B0R000257	ANELLO ELASTICO 40-E SP=2,5	ELASTIC RING 40-E SP=2,5	BAGUE RESSORT 40-E SP=2,5	ELASTISCHER RING	
42	B0R001071	ANELLO SPESSORE 40,2X54,8X0,2	RING THICKNESS 40,2X54,8X0,2			
43	F01040097	VITE M8X1,25X30 U5931 8.8ZN	SCR. M8X1,25X30 U5931 8.8ZN			
44	B0R000296	RONDELLA SICUR.D=8 SCHNORR	LOCK WASHER D=8 SCHNORR	RONDELLE SECURETE D=8 SCHNORR	BEILAGSSCHEIBE D=8	
45	B02124019	CUSC. 30208 CAT.A-ST004	BEARING	ROULEMENT	LAGER	
46	B02003013	CUSCINETTO 6006 CAT.B-ST004	BEARING	ROULEMENT	LAGER	
47	B0R000276	MANICOTTO PER DISINNESTO	COUPLING FOR DISENGAGEMENT	MANCHON POUR DECLENCHEMENT	HUELSE FUER AUSKUPPLUNG	

TAV_049

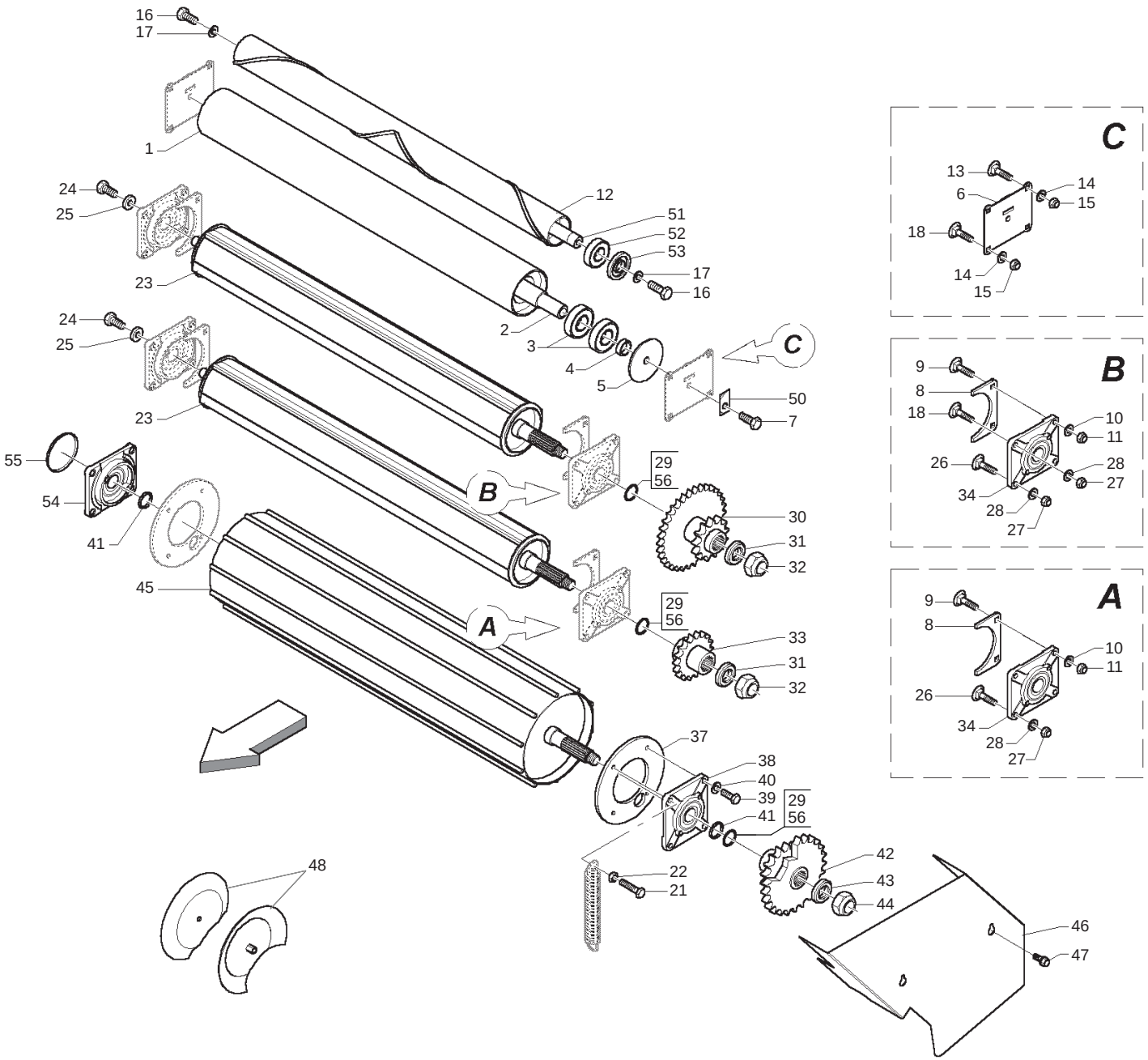

MASCHIO

cod. B0D5P0108

RULLI
ROLLERS

TAV_049

Pos.	Cod.	Descrizione	Description	Description	Benennung	Descripcion
1	B07S00959	RULLO FOLLE PORTELLONE	TAIL GATE IDLE ROLLER	ROULEAU FOU PORTE EN ARRIERE	HECKKLAPPENUMLENKWALZE	
2	B03500237	ALBERO CORTO	SHORT SHAFT	ARBRE COURT	KURZE WELLE	
3	B02040002	CUSCINETTO 6307-2RS CAT.KST004	BEARING	ROULEMENT	LAGER 6307-2RS	
4	B01300523	DISTANZIALE 35X 45X12,5	SPACER	ENTRETOISE	DISTANZSTUECK 35X45X12,5	
5	B01300590	RALLA 20,5 128 10	FIFTH WHEEL	BUTEE	SCHEIBE 20,5 128 10	
6	B013P0042	PIASTRA RULLO LISCIO	ROLLER PLATE	PLAQUE ROULEAU LISSE	WALZENPLATTE	
7	F01020605	VITE M20X2,5X50 U5739 8.8ZN	SCR. M20X2,5X50 U5739 8.8ZN	VIS M 20X2,5X50	SCHRAUBE M 20X2,5X50	TORNILLO M 20X2,5X50
8	B0C6P0003	RIPARO RULLI ALETTATI	ROLLERS GUARD	PROTECTION ROULEAUX	SCHUETZ WALZEN	
9	B00523395	VITE SPECIALE TTQST M12X45-8.8	SPECIAL SCREW	VIS SPECIALE	SCHRAUBE TTQST M12X 45-8.8	
10	F01410076	ROS.M12 13X 20X2,0 U1749 ZN	WASHER	RONDELLE	SCHEIBE	
11	B00920412	DADO M12X1,75 D985 8 ZN	NUT	ECROU	SELBSTSICHERNDE MUTTER M12-5S	
12	B07SP0293	RULLO PULITORE	CLEANER ROLLER	ROULEAU POLISSEUS	REININGUNGSWALZE	
13	B00523421	VITE SPECIALE TTQST M12X35-8.8	SPECIAL SCREW	VIS SPCIALE	SCHRAUBE TTQST M12X 35-8.8	
14	F01410076	ROS.M12 13X 20X2,0 U1749 ZN	WASHER	RONDELLE	SCHEIBE	
15	B00920412	DADO M12X1,75 D985 8 ZN	NUT	ECROU	SELBSTSICHERNDE MUTTER M12-5S	
16	B00191680	VITE M16X 2X 80 U5737 8.8ZN	SCREW	VIS	SCHRAUBE	
17	F01410100	ROS.M16 17X 30X 3 U6592 ZN	WASHER	RONDELLE	SCHEIBE	
18	B005C0002	VITE TTQST 12X35-8.8 TORNITA	SCREW	VIS	SCHRAUBE	
21	F01020519	VITE M12X1,75X 60 U5739 8.8ZN	SCREW M12X1,75X 60 U5739 8.8ZN			
22	F01200293	DADO M12X1,75 U5588 CL8 ZN	NUT M12X1,75 U5588 6S ZN	ECROU M12X1,75 U5588 6S ZN	MUTTER M12X1,75 U5588 6S ZN	TUERCA M12X1,75 U5588 6S ZN
23	B07SP0062	RULLO LT	LT ROLLER	ROULEAU LT	WALZE LT	
24	F01020564	VITE M16X2X35 U5739 8.8ZN	SCR. M16X2X35 U5739 8.8ZN	VIS M 16X35	SCHRAUBE M 16X35	TORNILLO M 16X35
25	B01515091	RALLA 17 52 6	FIFTH WHEEL	BUTEE	SCHEIBE	
26	B00523421	VITE SPECIALE TTQST M12X35-8.8	SPECIAL SCREW	VIS SPCIALE	SCHRAUBE TTQST M12X 35-8.8	
27	F01410076	ROS.M12 13X 20X2,0 U1749 ZN	WASHER	RONDELLE	SCHEIBE	
28	B00920412	DADO M12X1,75 D985 8 ZN	NUT	ECROU	SELBSTSICHERNDE MUTTER M12-5S	
29	B01300125	SPES. 40 48 0,5 ZINCATO	SHIM GALV	ENTRETOISE GALV	DISTANZSTUECK 40 48 0,5	
30	B034P0008	INGR. Z=26 13; 1, 1; ISO 16B-1	GEAR	ENGRANAGE	ZAHNRAD	
31	B014R3050	ROSETTA 30 UNI 5714-69 E DEIDR	WASHER	RONDELLE	BEILAGSSCHEIBE	
32	F01230291	DADO M30X 2 D985 ZN	NUT	ECROU	SELBSTSICHERNDE MUTTER M30X2-5	
33	B034P0007	INGR.Z12-1 RULLO NERVATO INF.	GEAR	ENGRANAGE	ZAHNRAD	
34	B02700051	SUPPORTO FLANGIATO	FLANGED SUPPORT	SUPPORT EMBOUTI	FLANSCHLAGER	
37	B0C003056	PIASTRA INTERNA RULLO GRANDE	ROLLER INNER PLATE	TOLE INTERIEUR ROULEAU	WALZEN INNENSCHEIBE	
38	B02700106	SUPP. FLANG. FILETTATO	THREADED FLANGED SUPPORT	SUPPORT FILETE	HALTER	
39	F01020512	VITE M12X1,75X35 U5739 8.8ZN	SCR. M12X1,75X35 U5739 8.8ZN	VIS M12X1,75X35 5739 8.8 ZN	SCHR. M12X1,75X35 5739 8.8 ZN	TORN. M12X1,75X35 5739 8.8 ZN
40	F01410076	ROS.M12 13X 20X2,0 U1749 ZN	WASHER	RONDELLE	SCHEIBE	
41	B01300151	SPES. 40 48 2 ZINCATO	SHIM	ENTRETOISE	DISTANZSTUECK 40 48 2	
42	B03400290	INGR.RULLO GRANDE Z=16-24 1	BIG ROLLER GEAR Z=16-24 1	ENGRANAGE	ZAHNRAD	
43	B014R3050	ROSETTA 30 UNI 5714-69 E DEIDR	WASHER	RONDELLE	BEILAGSSCHEIBE	
44	F01230291	DADO M30X 2 D985 ZN	NUT	ECROU	SELBSTSICHERNDE MUTTER M30X2-5	
45	B07S01841	RULLO GRANDE NEW	BIG ROLLER	ROUELAU GRAND NEW	GROSSE WALZE	
46	B0C3P0001G	CARTER	GUARD			
47	B00370001	VITE TE M 8X16 A SEZ.TRILOBATA	SCREW TRE M 8X16 SEZ TROUBLED	VIS	SCHRAUBE M 8X15	
48	B07S01845	TAZZA RESTRINGIMENTO	CHAMBER TIGHTENING CUPS	TASSE DE RETRECISSEMENT NEW	KAMMERVERENGUNGSTASSEN	
50	B0C004148	RALLA DI FERMO	LOCK WASHER	BUTEE D ARRET	ANSCHLAGPLATTE	
51	B03500214	ALBERO LUNGO	LONG SHAFT	ARBRE LONG	LANGE WELLE	
52	B02043517	CUSC.. 6207-2RS CAT.B-ST004	BEARING	ROULEMENT	LAGER 6207-2RS	
53	B013P0150	CHIUSURA RULLI PULITORE	ROLLER LOCK	FERMETURE ROULEAUX	WALZEN VERSCHLUSS	
54	B02700153	SUPPORTO FLANGIATO	FLANGED SUPPORT	SUPPORT POUR ROTOR CUT	FLANSCHLAGER	
55	B04400001	CAP. CHIUSO 110X10 TIPO C	CAP	COUVERCLE	GESCHLOSSENE KAPPE	
56	B01300126	SPES. 40 48 1 ZINC.ST_013	SHIM	ENTRETOISE	DISTANZSTUECK 40 408 1	

TAV_054

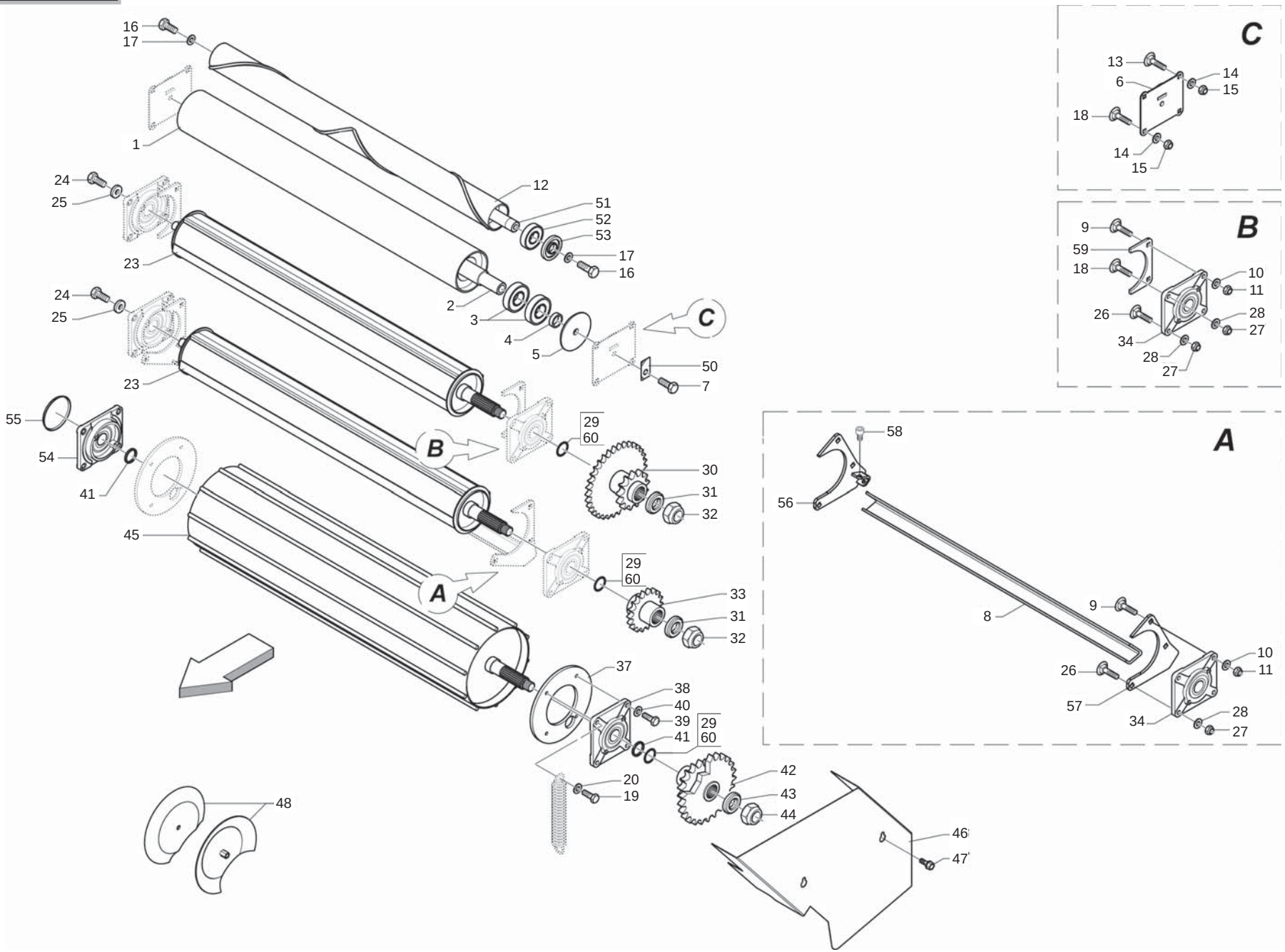

MASCHIO

cod. B0D5P0108

RULLI CUT
ROLLERS CUT

TAV_054

Pos.	Cod.	Descrizione	Description	Description	Benennung	Descripcion
1	B07S00959	RULLO FOLLE PORTELLONE	TAIL GATE IDLE ROLLER	ROULEAU FOU PORTE EN ARRIERE	HECKKLAPPENUMLENKWALZE	
2	B03500237	ALBERO CORTO	SHORT SHAFT	ARBRE COURT	KURZE WELLE	
3	B02040002	CUSCINETTO 6307-2RS CAT.KST004	BEARING	ROULEMENT	LAGER 6307-2RS	
4	B01300523	DISTANZIALE 35X 45X12,5	SPACER	ENTRETOISE	DISTANZSTUECK 35X45X12,5	
5	B01300590	RALLA 20,5 128 10	FIFTH WHEEL	BUTEE	SCHEIBE 20,5 128 10	
6	B013P0042	PIASTRA RULLO LISCIO	ROLLER PLATE	PLAQUE ROULEAU LISSE	WALZENPLATTE	
7	F01020605	VITE M20X2,5X50 U5739 8.8ZN	SCR. M20X2,5X50 U5739 8.8ZN	VIS M 20X2,5X50	SCHRAUBE M 20X2,5X50	TORNILLO M 20X2,5X50
8	B0C1P0218	CORPO TRAVERSA	CROSSBAR FRAME			
9	B00523395	VITE SPECIALE TTQST M12X45-8.8	SPECIAL SCREW	VIS SPECIALE	SCHRAUBE TTQST M12X 45-8.8	
10	F01410076	ROS.M12 13X 20X2,0 U1749 ZN	WASHER	RONDELLE	SCHEIBE	
11	B00920412	DADO M12X1,75 D985 8 ZN	NUT	ECROU	SELBSTSICHERNDE MUTTER M12-5S	
12	B07SP0293	RULLO PULITORE	CLEANER ROLLER	ROULEAU POLISSEUS	REININGUNGSWALZE	
13	B00523421	VITE SPECIALE TTQST M12X35-8.8	SPECIAL SCREW	VIS SPCIALE	SCHRAUBE TTQST M12X 35-8.8	
14	F01410076	ROS.M12 13X 20X2,0 U1749 ZN	WASHER	RONDELLE	SCHEIBE	
15	B00920412	DADO M12X1,75 D985 8 ZN	NUT	ECROU	SELBSTSICHERNDE MUTTER M12-5S	
16	B00191680	VITE M16X 2X 80 U5737 8.8ZN	SCREW	VIS	SCHRAUBE	
17	F01410100	ROS.M16 17X 30X 3 U6592 ZN	WASHER	RONDELLE	SCHEIBE	
18	B005C0002	VITE TTQST 12X35-8.8 TORNITA	SCREW	VIS	SCHRAUBE	
19	B00471235	VITE TTEI M12X 35-8.8 UNBRA	SCREW	VIS	SCHRAUBE TTEI M12X35-8.8	
20	F01420120	ROS.M12 13X 36X2,5 U6593 ZN	WASHER	RONDELLE	SCHEIBE	
23	B07SP0062	RULLO LT	LT ROLLER	ROULEAU LT	WALZE LT	
24	F01020564	VITE M16X2X35 U5739 8.8ZN	SCR. M16X2X35 U5739 8.8ZN	VIS M 16X35	SCHRAUBE M 16X35	TORNILLO M 16X35
25	B01515091	RALLA 17 52 6	FIFTH WHEEL	BUTEE	SCHEIBE	
26	B00523421	VITE SPECIALE TTQST M12X35-8.8	SPECIAL SCREW	VIS SPCIALE	SCHRAUBE TTQST M12X 35-8.8	
27	F01410076	ROS.M12 13X 20X2,0 U1749 ZN	WASHER	RONDELLE	SCHEIBE	
28	B00920412	DADO M12X1,75 D985 8 ZN	NUT	ECROU	SELBSTSICHERNDE MUTTER M12-5S	
29	B01300125	SPES. 40 48 0,5 ZINCATO	SHIM GALV	ENTRETOISE GALV	DISTANZSTUECK 40 48 0,5	
30	B034P0008	INGR. Z=26 13; 1, 1; ISO 16B-1	GEAR	ENGRANAGE	ZAHNRAD	
31	B014R3050	ROSETTA 30 UNI 5714-69 E DEIDR	WASHER	RONDELLE	BEILAGSSCHEIBE	
32	F01230291	DADO M30X 2 D985 ZN	NUT	ECROU	SELBSTSICHERNDE MUTTER M30X2-5	
33	B034P0007	INGR.Z12-1 RULLO NERVATO INF.	GEAR	ENGRANAGE	ZAHNRAD	
34	B02700051	SUPPORTO FLANGIATO	FLANGED SUPPORT	SUPPORT EMBOUTI	FLANSCHLAGER	
37	B0C003056	PIASTRA INTERNA RULLO GRANDE	ROLLER INNER PLATE	TOLE INTERIEUR ROULEAU	WALZEN INNENSCHEIBE	
38	B02700106	SUPP. FLANG. FILETTATO	THREADED FLANGED SUPPORT	SUPPORT FILETE	HALTER	
39	F01020512	VITE M12X1,75X35 U5739 8.8ZN	SCR. M12X1,75X35 U5739 8.8ZN	VIS M12X1,75X35 5739 8.8 ZN	SCHR. M12X1,75X35 5739 8.8 ZN	TORN. M12X1,75X35 5739 8.8 ZN
40	F01410076	ROS.M12 13X 20X2,0 U1749 ZN	WASHER	RONDELLE	SCHEIBE	
41	B01300151	SPES. 40 48 2 ZINCATO	SHIM	ENTRETOISE	DISTANZSTUECK 40 48 2	
42	B03400290	INGR.RULLO GRANDE Z=16-24 1	BIG ROLLER GEAR Z=16-24 1	ENGRANAGE	ZAHNRAD	
43	B014R3050	ROSETTA 30 UNI 5714-69 E DEIDR	WASHER	RONDELLE	BEILAGSSCHEIBE	
44	F01230291	DADO M30X 2 D985 ZN	NUT	ECROU	SELBSTSICHERNDE MUTTER M30X2-5	
45	B07S01841	RULLO GRANDE NEW	BIG ROLLER	ROUELAU GRAND NEW	GROSSE WALZE	
46	B0C3P0001G	CARTER	GUARD			
47	B00370001	VITE TE M 8X16 A SEZ.TRILOBATA	SCREW TRE M 8X16 SEZ TROUBLED	VIS	SCHRAUBE M 8X15	
48	B07S01845	TAZZA RESTRINGIMENTO	CHAMBER TIGHTENING CUPS	TASSE DE RETRECISSEMENT NEW	KAMMERVERENGUNGSTASSEN	
50	B0C004148	RALLA DI FERMO	LOCK WASHER	BUTEE D ARRET	ANSCHLAGPLATTE	
51	B03500214	ALBERO LUNGO	LONG SHAFT	ARBRE LONG	LANGE WELLE	
52	B02043517	CUSC.. 6207-2RS CAT.B-ST004	BEARING	ROULEMENT	LAGER 6207-2RS	
53	B013P0150	CHIUSURA RULLI PULITORE	ROLLER LOCK	FERMETURE ROULEAUX	WALZEN VERSCHLUSS	
54	B02700153	SUPPORTO FLANGIATO	FLANGED SUPPORT	SUPPORT POUR ROTOR CUT	FLANSCHLAGER	
55	B04400001	CAP. CHIUSO 110X10 TIPO C	CAP	COUVERCLE	GESCHLOSSENE KAPPE	
56	B07SP0736	ATTACCO LATERALE DX	RIGHT COUPLING			
57	B07SP0735	ATTACCO LATERALE SX	LEFT COUPLING			
58	B00471220	VITE TTEI M12X 20-8.8 UNBRA	SCREW	VIS	SCHRAUBE TTEI M12X 20-8.8	
59	B0C6P0003	RIPARO RULLI ALETTATI	ROLLERS GUARD	PROTECTION ROULEAUX	SCHUETZ WALZEN	
60	B01300126	SPES. 40 48 1 ZINC.ST_013	SHIM	ENTRETOISE	DISTANZSTUECK 40 408 1	

TAV_060

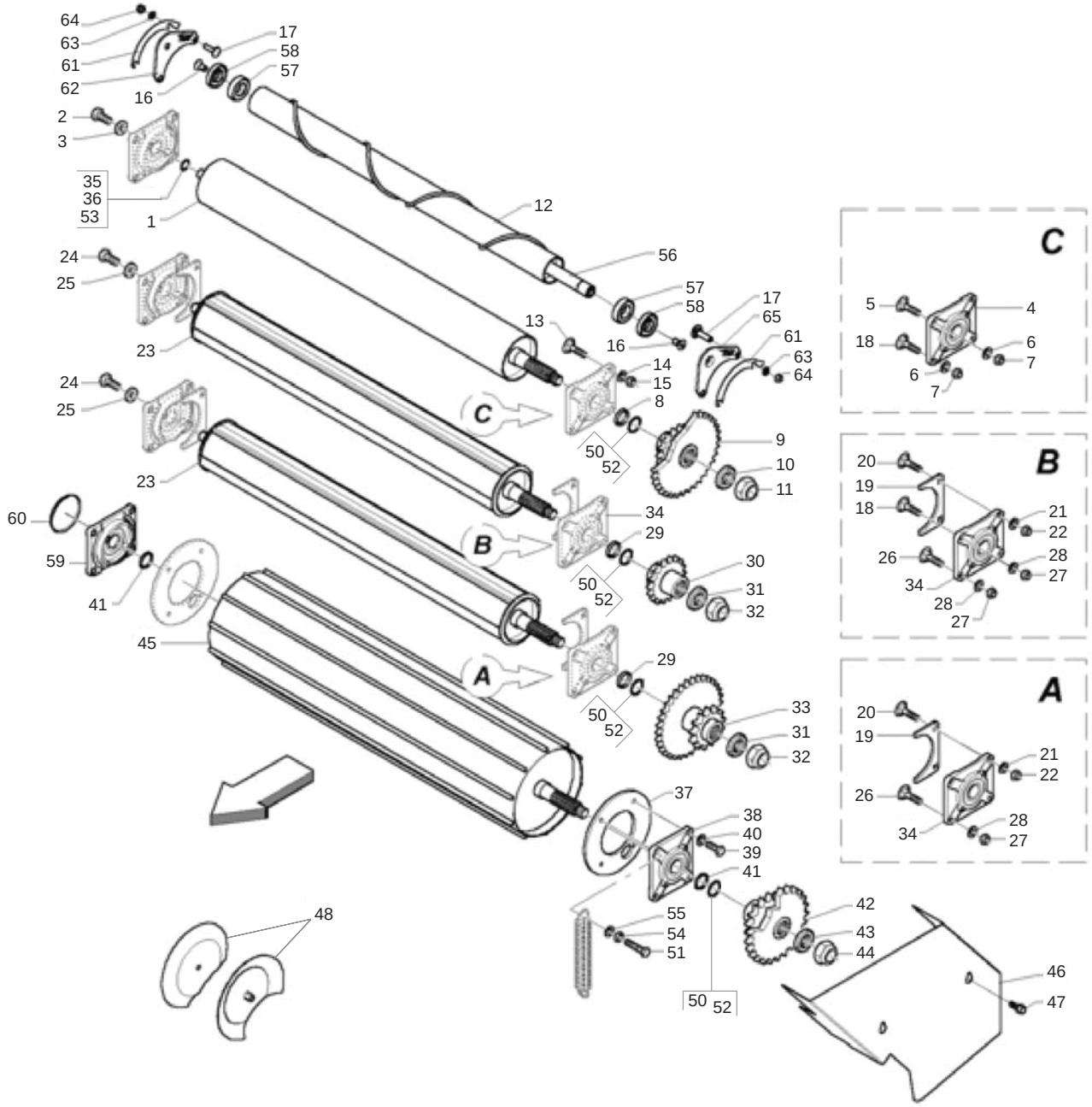

MASCHIO

cod. B0D5P0108

RULLI "H20"
ROLLERS "H20"

TAV_060

Pos.	Cod.	Descrizione	Description	Description	Benennung	Descripcion
1	B07S00942	RULLO MOT. INFERIORE NL	LOWER MOTOR ROLLER	ROULEAU MOTEUR INFERIEUR	UNTERE MOTORWALZE	
2	F01020564	VITE M16X2X35 U5739 8.8ZN	SCR. M16X2X35 U5739 8.8ZN	VIS M 16X35	SCHRAUBE M 16X35	TORNILLO M 16X35
3	B01515091	RALLA 17 52 6	FIFTH WHEEL	BUTEE	SCHEIBE	
4	B02700051	SUPPORTO FLANGIATO	FLANGED SUPPORT	SUPPORT EMBOUTI	FLANSCHLAGER	
5	B00523421	VITE SPECIALE TTQST M12X35-8.8	SPECIAL SCREW	VIS SPCIALE	SCHRAUBE TTQST M12X 35-8.8	
6	F01410076	ROS.M12 13X 20X2,0 U1749 ZN	WASHER	RONDELLE	SCHEIBE	
7	B00920412	DADO M12X1,75 D985 8 ZN	NUT	ECROU	SELBSTSICHERNDE MUTTER M12-5S	
8	B01300845	DISTANZIALE 40X50X4	SPACER	ENTRETOISE	DISTANZSCHEIBE 40X50X4	
9	B03400287	INGR. Z=23 10; 1, 1; ISO 16B-1	SMOOTH ROLLER GEAR Z=23-10 1	ENGRANAGE	ZAHNRAD Z=23-10 1	
10	B014R3050	ROSETTA 30 UNI 5714-69 E DEIDR	WASHER	RONDELLE	BEILAGSSCHEIBE	
11	F01230291	DADO M30X 2 D985 ZN	NUT	ECROU	SELBSTSICHERNDE MUTTER M30X2-5	
12	B07SP0333	RULLO AIUTO PRODOTTO SPRINTER	ROLLER SPRINTER			
13	B00523395	VITE SPECIALE TTQST M12X45-8.8	SPECIAL SCREW	VIS SPECIALE	SCHRAUBE TTQST M12X 45-8.8	
14	F01410076	ROS.M12 13X 20X2,0 U1749 ZN	WASHER	RONDELLE	SCHEIBE	
15	B00920412	DADO M12X1,75 D985 8 ZN	NUT	ECROU	SELBSTSICHERNDE MUTTER M12-5S	
16	B00441630	VITE ZINC.TSPEI M16X 30-10.9	SCREW			
17	B00523395	VITE SPECIALE TTQST M12X45-8.8	SPECIAL SCREW	VIS SPECIALE	SCHRAUBE TTQST M12X 45-8.8	
18	B005C0002	VITE TTQST 12X35-8.8 TORNITA	SCREW	VIS	SCHRAUBE	
19	B0C6P0003	RIPARO RULLI ALETTATI	ROLLERS GUARD	PROTECTION ROULEAUX	SCHUETZ WALZEN	
20	B00523395	VITE SPECIALE TTQST M12X45-8.8	SPECIAL SCREW	VIS SPECIALE	SCHRAUBE TTQST M12X 45-8.8	
21	F01410076	ROS.M12 13X 20X2,0 U1749 ZN	WASHER	RONDELLE	SCHEIBE	
22	B00920412	DADO M12X1,75 D985 8 ZN	NUT	ECROU	SELBSTSICHERNDE MUTTER M12-5S	
23	B07SP0062	RULLO LT	LT ROLLER	ROULEAU LT	WALZE LT	
24	F01020564	VITE M16X2X35 U5739 8.8ZN	SCR. M16X2X35 U5739 8.8ZN	VIS M 16X35	SCHRAUBE M 16X35	TORNILLO M 16X35
25	B01515091	RALLA 17 52 6	FIFTH WHEEL	BUTEE	SCHEIBE	
26	B00523421	VITE SPECIALE TTQST M12X35-8.8	SPECIAL SCREW	VIS SPCIALE	SCHRAUBE TTQST M12X 35-8.8	
27	B00920412	DADO M12X1,75 D985 8 ZN	NUT	ECROU	SELBSTSICHERNDE MUTTER M12-5S	
28	F01410076	ROS.M12 13X 20X2,0 U1749 ZN	WASHER	RONDELLE	SCHEIBE	
29	B01300845	DISTANZIALE 40X50X4	SPACER	ENTRETOISE	DISTANZSCHEIBE 40X50X4	
30	B03400235	INGRANAGGIO Z=11-1	GEAR Z=11-1	ENGRENAGE	ZAHNRAD Z=11-1	
31	B014R3050	ROSETTA 30 UNI 5714-69 E DEIDR	WASHER	RONDELLE	BEILAGSSCHEIBE	
32	F01230291	DADO M30X 2 D985 ZN	NUT	ECROU	SELBSTSICHERNDE MUTTER M30X2-5	
33	B034P0006	INGR.RULLO BACC.INF.Z=23-12 1	LOWER GEAR ROLLER Z=23-12 1	ENGRANAGE ROULEAU INF. Z=23-12	ZAHNRAD	
34	B02700051	SUPPORTO FLANGIATO	FLANGED SUPPORT	SUPPORT EMBOUTI	FLANSCHLAGER	
35	B01300151	SPES. 40 48 2 ZINCATO	SHIM	ENTRETOISE	DISTANZSTUECK 40 48 2	
36	B01300126	SPES. 40 48 1 ZINC.ST_013	SHIM	ENTRETOISE	DISTANZSTUECK 40 408 1	
37	B0C003056	PIASTRA INTERNA RULLO GRANDE	ROLLER INNER PLATE	TOLE INTERIEUR ROULEAU	WALZEN INNENSCHEIBE	
38	B02700106	SUPP. FLANG. FILETTATO	THREADED FLANGED SUPPORT	SUPPORT FILETE	HALTER	
39	F01020512	VITE M12X1,75X35 U5739 8.8ZN	SCR. M12X1,75X35 U5739 8.8ZN	VIS M12X1,75X35 5739 8.8 ZN	SCHR. M12X1,75X35 5739 8.8 ZN	TORN. M12X1,75X35 5739 8.8 ZN
40	F01410076	ROS.M12 13X 20X2,0 U1749 ZN	WASHER	RONDELLE	SCHEIBE	
41	B01300151	SPES. 40 48 2 ZINCATO	SHIM	ENTRETOISE	DISTANZSTUECK 40 48 2	
42	B03400290	INGR.RULLO GRANDE Z=16-24 1	BIG ROLLER GEAR Z=16-24 1	ENGRANAGE	ZAHNRAD	
43	B014R3050	ROSETTA 30 UNI 5714-69 E DEIDR	WASHER	RONDELLE	BEILAGSSCHEIBE	
44	F01230291	DADO M30X 2 D985 ZN	NUT	ECROU	SELBSTSICHERNDE MUTTER M30X2-5	
45	B07S01841	RULLO GRANDE NEW	BIG ROLLER	ROUELAU GRAND NEW	GROSSE WALZE	
46	B0C3P0001G	CARTER	GUARD			
47	B00370001	VITE TE M 8X16 A SEZ.TRILOBATA	SCREW TRE M 8X16 SEZ TROUBLED	VIS	SCHRAUBE M 8X15	
48	B07S01845	TAZZA RESTRINGIMENTO	CHAMBER TIGHTENING CUPS	TASSE DE RETRECISSEMENT NEW	KAMMERVERENGUNGSTASSEN	
50	B01300125	SPES. 40 48 0,5 ZINCATO	SHIM GALV	ENTRETOISE GALV	DISTANZSTUECK 40 48 0,5	
51	B00471235	VITE TTEI M12X 35-8.8 UNBRA	SCREW	VIS	SCHRAUBE TTEI M12X35-8.8	
52	B01300126	SPES. 40 48 1 ZINC.ST_013	SHIM	ENTRETOISE	DISTANZSTUECK 40 408 1	
53	B01300125	SPES. 40 48 0,5 ZINCATO	SHIM GALV	ENTRETOISE GALV	DISTANZSTUECK 40 48 0,5	
54	F01200293	DADO M12X1,75 U5588 CL8 ZN	NUT M12X1,75 U5588 6S ZN	ECROU M12X1,75 U5588 6S ZN	MUTTER M12X1,75 U5588 6S ZN	TUERCA M12X1,75 U5588 6S ZN
55	F01410076	ROS.M12 13X 20X2,0 U1749 ZN	WASHER	RONDELLE	SCHEIBE	
56	B03500324	ALBERO LUNGO SPRINTER	SHAFT	ARBRE LONG SPRINTER	LANGE WELLE	
57	B02043517	CUSC.. 6207-2RS CAT.B-ST004	BEARING	ROULEMENT	LAGER 6207-2RS	
58	B013P0150	CHIUSURA RULLI PULITORE	ROLLER LOCK	FERMETURE ROULEAUX	WALZEN VERSCHLUSS	

TAV_060

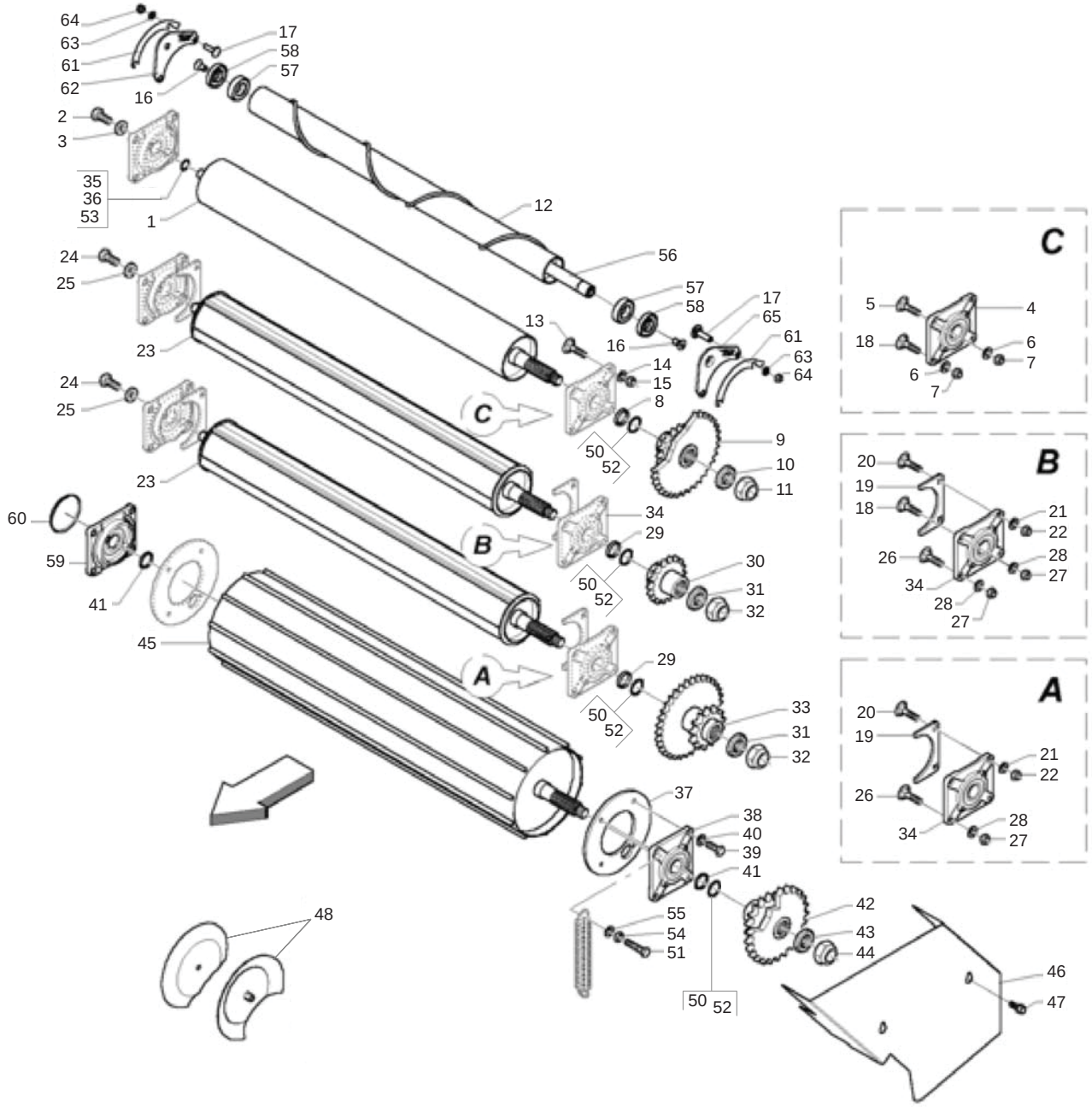

MASCHIO

cod. B0D5P0108

RULLI "H20"
ROLLERS "H20"

TAV_060

Pos.	Cod.	Descrizione	Description	Description	Benennung	Descripcion
59	B02700153	SUPPORTO FLANGIATO	FLANGED SUPPORT	SUPPORT POUR ROTOR CUT	FLANSCHLAGER	
60	B04400001	CAP. CHIUSO 110X10 TIPO C	CAP	COUVERCLE	GESCHLOSSENE KAPPE	
61	B0C6P0430	SPES. PER ATTACCO H20	SHIM	ENTRETOISE	DICHTUNG FUER ANSCHLUSS H 20	
62	B0C6P0429	ATTACCO DX RULLO SPIRALE H20	ATTACHEMENT	ATTELAGE	ANSCHLUSS RECHTS WALZE	
63	F01410076	ROS.M12 13X 20X2,0 U1749 ZN	WASHER	RONDELLE	SCHEIBE	
64	B00920412	DADO M12X1,75 D985 8 ZN	NUT	ECROU	SELBSTSICHERNDE MUTTER M12-5S	
65	B0C6P0428	ATTACCO SX RULLO SPIRALE H20	ATTACHEMENT	ATTELAGE	ANSCHLUSS LINKS WALZE	

TAV_065

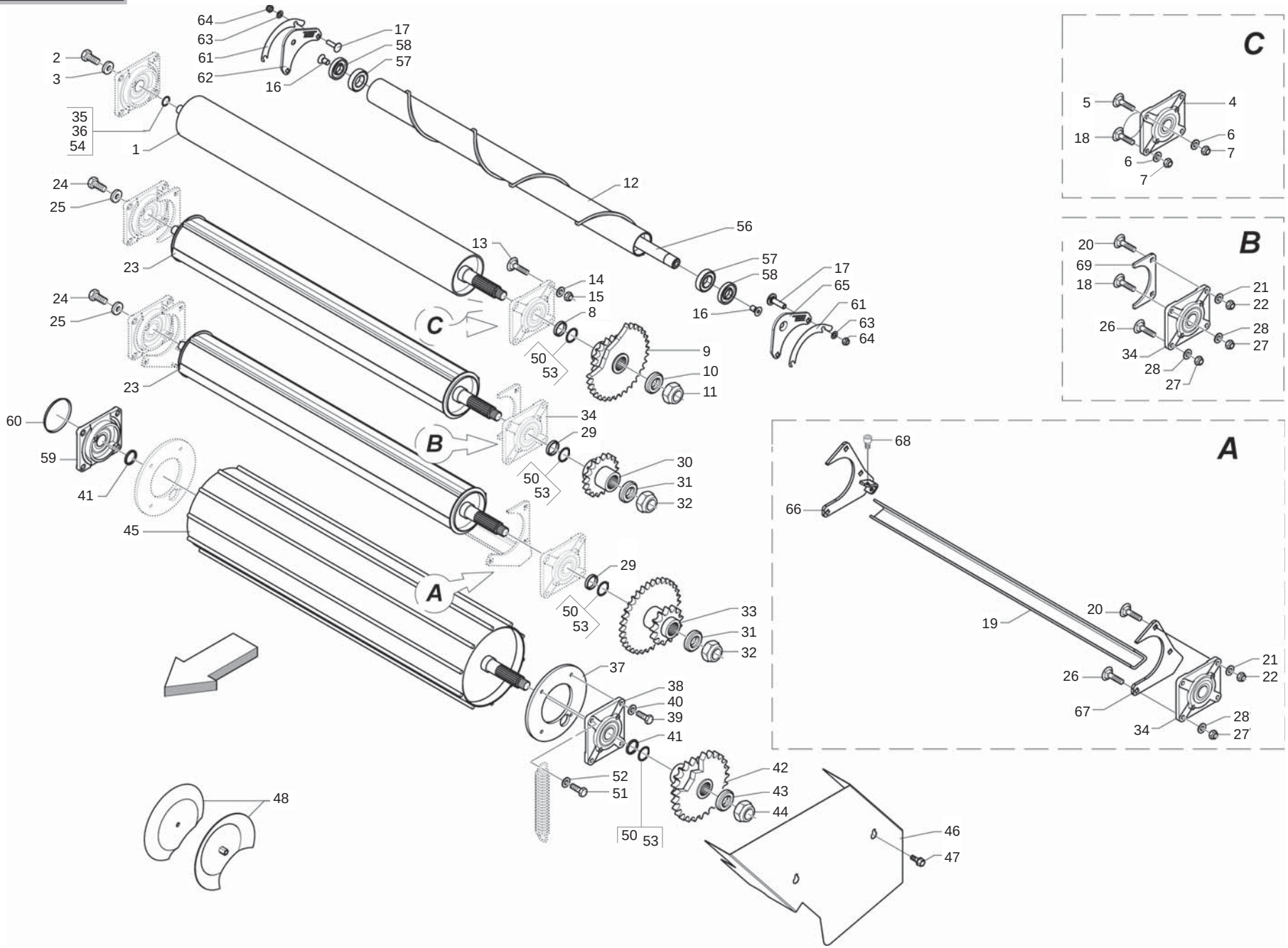

MASCHIO

cod. B0D5P0108

RULLI CUT "H20"
ROLLERS CUT "H20"

TAV_065

Pos.	Cod.	Descrizione	Description	Description	Benennung	Descripcion
1	B07S00942	RULLO MOT. INFERIORE NL	LOWER MOTOR ROLLER	ROULEAU MOTEUR INFERIEUR	UNTERE MOTORWALZE	
2	F01020564	VITE M16X2X35 U5739 8.8ZN	SCR. M16X2X35 U5739 8.8ZN	VIS M 16X35	SCHRAUBE M 16X35	TORNILLO M 16X35
3	B01515091	RALLA 17 52 6	FIFTH WHEEL	BUTEE	SCHEIBE	
4	B02700051	SUPPORTO FLANGIATO	FLANGED SUPPORT	SUPPORT EMBOUTI	FLANSCHLAGER	
5	B00523421	VITE SPECIALE TTQST M12X35-8.8	SPECIAL SCREW	VIS SPCIALE	SCHRAUBE TTQST M12X 35-8.8	
6	F01410076	ROS.M12 13X 20X2,0 U1749 ZN	WASHER	RONDELLE	SCHEIBE	
7	B00920412	DADO M12X1,75 D985 8 ZN	NUT	ECROU	SELBSTSICHERNDE MUTTER M12-5S	
8	B01300845	DISTANZIALE 40X50X4	SPACER	ENTRETOISE	DISTANZSCHEIBE 40X50X4	
9	B03400287	INGR. Z=23 10; 1, 1; ISO 16B-1	SMOOTH ROLLER GEAR Z=23-10 1	ENGRANAGE	ZAHNRAD Z=23-10 1	
10	B014R3050	ROSETTA 30 UNI 5714-69 E DEIDR	WASHER	RONDELLE	BEILAGSSCHEIBE	
11	F01230291	DADO M30X 2 D985 ZN	NUT	ECROU	SELBSTSICHERNDE MUTTER M30X2-5	
12	B07SP0333	RULLO AIUTO PRODOTTO SPRINTER	ROLLER SPRINTER			
13	B00523395	VITE SPECIALE TTQST M12X45-8.8	SPECIAL SCREW	VIS SPECIALE	SCHRAUBE TTQST M12X 45-8.8	
14	F01410076	ROS.M12 13X 20X2,0 U1749 ZN	WASHER	RONDELLE	SCHEIBE	
15	B00920412	DADO M12X1,75 D985 8 ZN	NUT	ECROU	SELBSTSICHERNDE MUTTER M12-5S	
16	B00441630	VITE ZINC.TSPEI M16X 30-10.9	SCREW			
17	F01410100	ROS.M16 17X 30X 3 U6592 ZN	WASHER	RONDELLE	SCHEIBE	
18	B005C0002	VITE TTQST 12X35-8.8 TORNITA	SCREW	VIS	SCHRAUBE	
19	B0C1P0218	CORPO TRAVERSA	CROSSBAR FRAME			
20	B00523395	VITE SPECIALE TTQST M12X45-8.8	SPECIAL SCREW	VIS SPECIALE	SCHRAUBE TTQST M12X 45-8.8	
21	F01410076	ROS.M12 13X 20X2,0 U1749 ZN	WASHER	RONDELLE	SCHEIBE	
22	B00920412	DADO M12X1,75 D985 8 ZN	NUT	ECROU	SELBSTSICHERNDE MUTTER M12-5S	
23	B07SP0062	RULLO LT	LT ROLLER	ROULEAU LT	WALZE LT	
24	F01020564	VITE M16X2X35 U5739 8.8ZN	SCR. M16X2X35 U5739 8.8ZN	VIS M 16X35	SCHRAUBE M 16X35	TORNILLO M 16X35
25	B01515091	RALLA 17 52 6	FIFTH WHEEL	BUTEE	SCHEIBE	
26	B00523421	VITE SPECIALE TTQST M12X35-8.8	SPECIAL SCREW	VIS SPCIALE	SCHRAUBE TTQST M12X 35-8.8	
27	B00920412	DADO M12X1,75 D985 8 ZN	NUT	ECROU	SELBSTSICHERNDE MUTTER M12-5S	
28	F01410076	ROS.M12 13X 20X2,0 U1749 ZN	WASHER	RONDELLE	SCHEIBE	
29	B01300845	DISTANZIALE 40X50X4	SPACER	ENTRETOISE	DISTANZSCHEIBE 40X50X4	
30	B03400235	INGRANAGGIO Z=11-1	GEAR Z=11-1	ENGRENAGE	ZAHNRAD Z=11-1	
31	B014R3050	ROSETTA 30 UNI 5714-69 E DEIDR	WASHER	RONDELLE	BEILAGSSCHEIBE	
32	F01230291	DADO M30X 2 D985 ZN	NUT	ECROU	SELBSTSICHERNDE MUTTER M30X2-5	
33	B034P0006	INGR.RULLO BACC.INF.Z=23-12 1	LOWER GEAR ROLLER Z=23-12 1	ENGRANAGE ROULEAU INF. Z=23-12	ZAHNRAD	
34	B02700051	SUPPORTO FLANGIATO	FLANGED SUPPORT	SUPPORT EMBOUTI	FLANSCHLAGER	
35	B01300151	SPES. 40 48 2 ZINCATO	SHIM	ENTRETOISE	DISTANZSTUECK 40 48 2	
36	B01300125	SPES. 40 48 0,5 ZINCATO	SHIM GALV	ENTRETOISE GALV	DISTANZSTUECK 40 48 0,5	
37	B0C003056	PIASTRA INTERNA RULLO GRANDE	ROLLER INNER PLATE	TOLE INTERIEUR ROULEAU	WALZEN INNENSCHEIBE	
38	B02700106	SUPP. FLANG. FILETTATO	THREADED FLANGED SUPPORT	SUPPORT FILETE	HALTER	
39	F01020512	VITE M12X1,75X35 U5739 8.8ZN	SCR. M12X1,75X35 U5739 8.8ZN	VIS M12X1,75X35 5739 8.8 ZN	SCHR. M12X1,75X35 5739 8.8 ZN	TORN. M12X1,75X35 5739 8.8 ZN
40	F01410076	ROS.M12 13X 20X2,0 U1749 ZN	WASHER	RONDELLE	SCHEIBE	
41	B01300151	SPES. 40 48 2 ZINCATO	SHIM	ENTRETOISE	DISTANZSTUECK 40 48 2	
42	B03400290	INGR.RULLO GRANDE Z=16-24 1	BIG ROLLER GEAR Z=16-24 1	ENGRANAGE	ZAHNRAD	
43	B014R3050	ROSETTA 30 UNI 5714-69 E DEIDR	WASHER	RONDELLE	BEILAGSSCHEIBE	
44	F01230291	DADO M30X 2 D985 ZN	NUT	ECROU	SELBSTSICHERNDE MUTTER M30X2-5	
45	B07S01841	RULLO GRANDE NEW	BIG ROLLER	ROUELAU GRAND NEW	GROSSE WALZE	
46	B0C3P0001G	CARTER	GUARD			
47	B00370001	VITE TE M 8X16 A SEZ.TRILOBATA	SCREW TRE M 8X16 SEZ TROUBLED	VIS	SCHRAUBE M 8X15	
48	B07S01845	TAZZA RESTRINGIMENTO	CHAMBER TIGHTENING CUPS	TASSE DE RETRECISSEMENT NEW	KAMMERVERENGUNGSTASSEN	
50	B01300126	SPES. 40 48 1 ZINC.ST_013	SHIM	ENTRETOISE	DISTANZSTUECK 40 408 1	
51	B00471235	VITE TTEI M12X 35-8.8 UNBRA	SCREW	VIS	SCHRAUBE TTEI M12X35-8.8	
52	F01420120	ROS.M12 13X 36X2,5 U6593 ZN	WASHER	RONDELLE	SCHEIBE	
53	B01300125	SPES. 40 48 0,5 ZINCATO	SHIM GALV	ENTRETOISE GALV	DISTANZSTUECK 40 48 0,5	
54	B01300126	SPES. 40 48 1 ZINC.ST_013	SHIM	ENTRETOISE	DISTANZSTUECK 40 408 1	
56	B03500324	ALBERO LUNGO SPRINTER	SHAFT	ARBRE LONG SPRINTER	LANGE WELLE	
57	B02043517	CUSC.. 6207-2RS CAT.B-ST004	BEARING	ROULEMENT	LAGER 6207-2RS	
58	B013P0150	CHIUSURA RULLI PULITORE	ROLLER LOCK	FERMETURE ROULEAUX	WALZEN VERSCHLUSS	
59	B02700153	SUPPORTO FLANGIATO	FLANGED SUPPORT	SUPPORT POUR ROTOR CUT	FLANSCHLAGER	

TAV_065

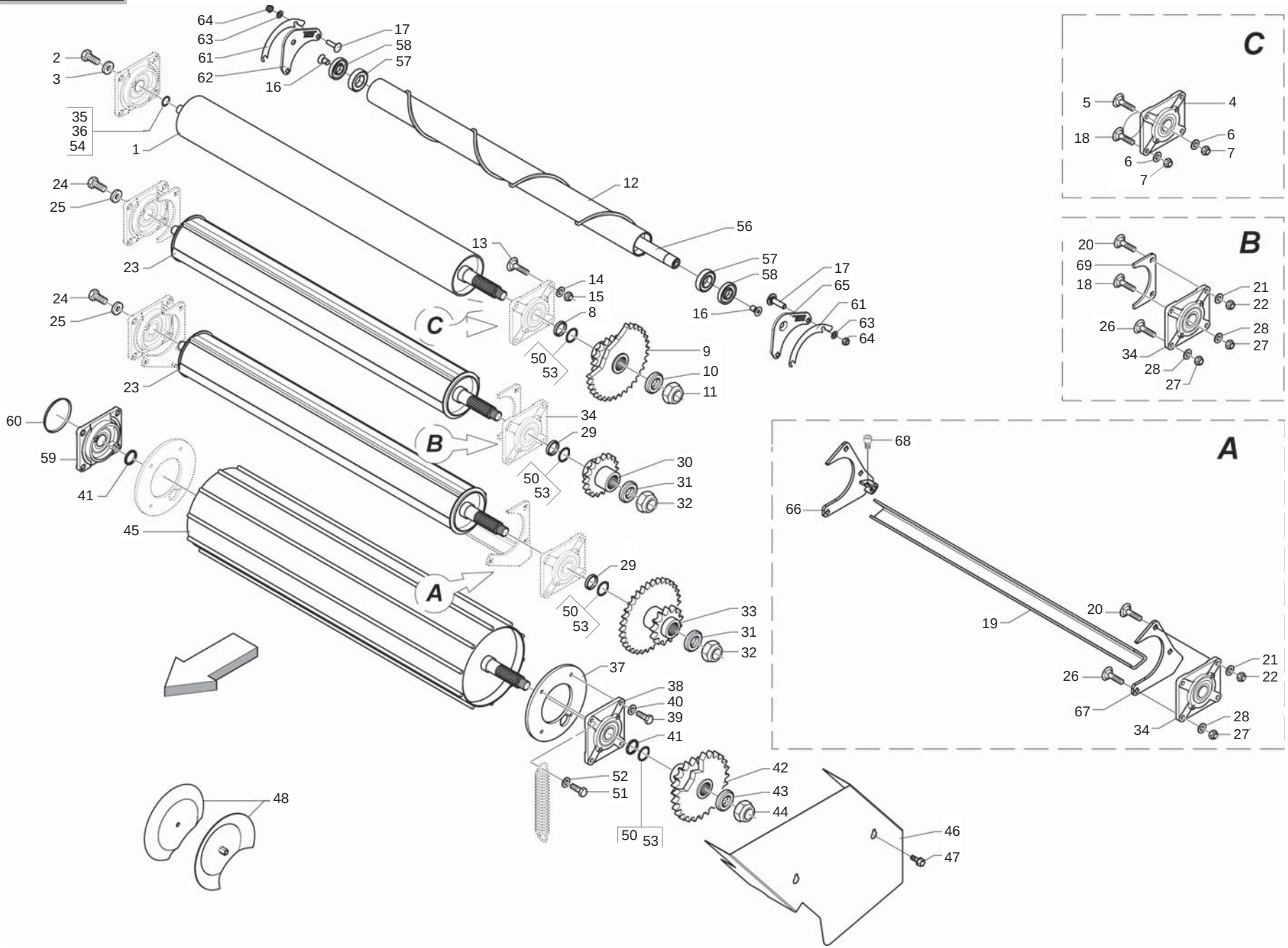

MASCHIO

cod. B0D5P0108

RULLI CUT "H20"
ROLLERS CUT "H20"

TAV_065

Pos.	Cod.	Descrizione	Description	Description	Benennung	Descripcion
60	B04400001	CAP. CHIUSO 110X10 TIPO C	CAP	COUVERCLE	GESCHLOSSENE KAPPE	
61	B0C6P0430	SPES. PER ATTACCO H20	SHIM	ENTRETOISE	DICHTUNG FUER ANSCHLUSS H 20	
62	B0C6P0429	ATTACCO DX RULLO SPIRALE H20	ATTACHEMENT	ATTELAGE	ANSCHLUSS RECHTS WALZE	
63	F01410076	ROS.M12 13X 20X2,0 U1749 ZN	WASHER	RONDELLE	SCHEIBE	
64	B00920412	DADO M12X1,75 D985 8 ZN	NUT	ECROU	SELBSTSICHERNDE MUTTER M12-5S	
65	B0C6P0428	ATTACCO SX RULLO SPIRALE H20	ATTACHEMENT	ATTELAGE	ANSCHLUSS LINKS WALZE	
66	B07SP0736	ATTACCO LATERALE DX	RIGHT COUPLING			
67	B07SP0735	ATTACCO LATERALE SX	LEFT COUPLING			
68	B00471220	VITE TTEI M12X 20-8.8 UNBRA	SCREW	VIS	SCHRAUBE TTEI M12X 20-8.8	
69	B0C6P0003	RIPARO RULLI ALETTATI	ROLLERS GUARD	PROTECTION ROULEAUX	SCHUETZ WALZEN	

TAV_070

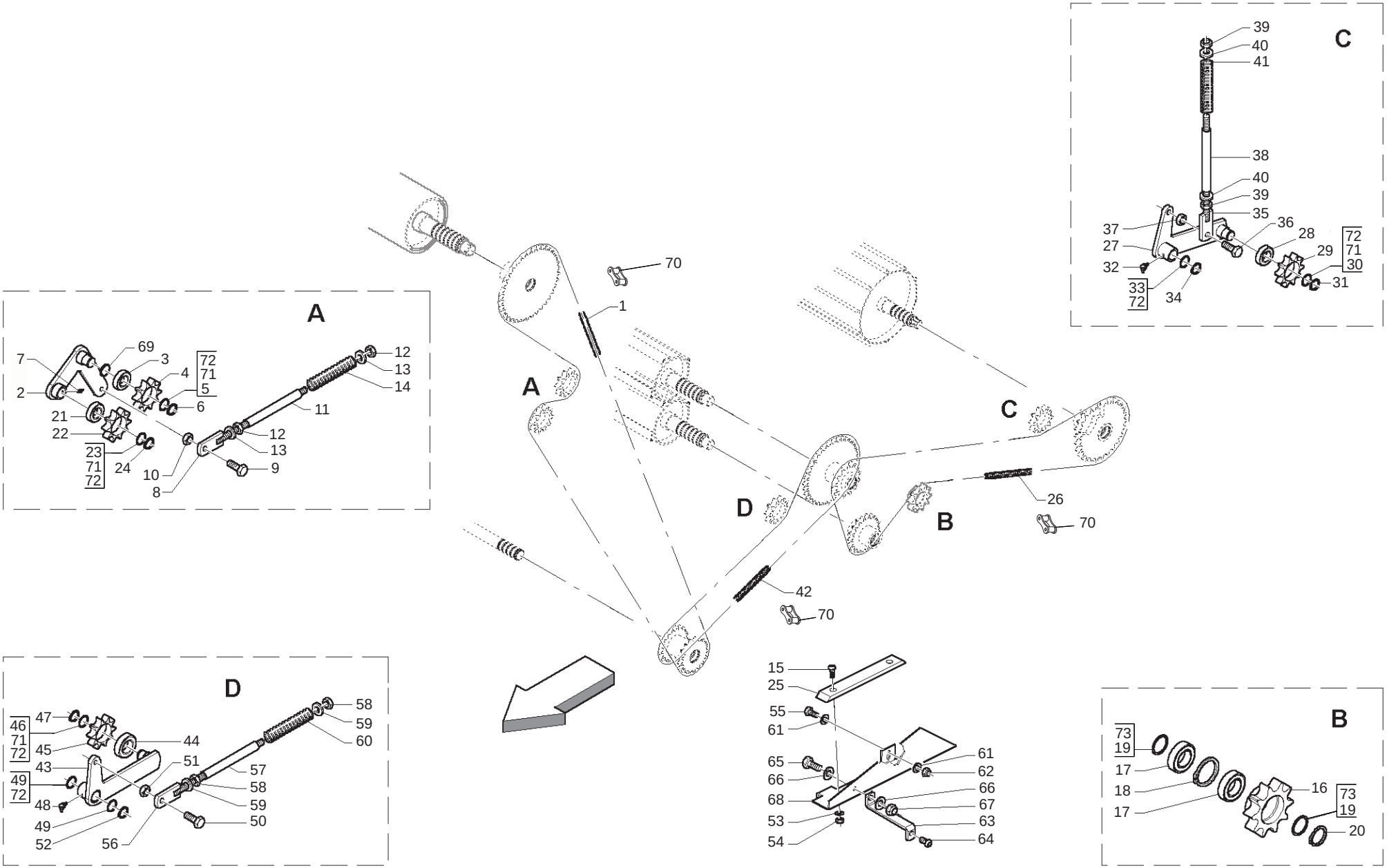

MASCHIO

cod. B0D5P0108

TRASMISSIONE
TRANSMISSION

TAV_070

Pos.	Cod.	Descrizione	Description	Description	Benennung	Descripcion
1	B030E1143	CATENA RULLI ISO 16 B-1 143M	ROLLER CHAIN ISO 16 B-1 143 M	CHAINE ROULEAUX ISO 16 B-1 143	WALZENKETTE	
2	B07SP0079	BRACCIO TENDICATENA	CHAIN STRECHING ARM	BRAS TENDEUR CHAINE	RIEMENSPANNER	
3	F04010170	CUSC 6205-2RS CAT.A-ST004	BEARING	ROULEMENT	LAGER 6205-2RS	
4	B03400274	CORONA Z10-1 ISO F52 TRATT	SPROCKET Z=10-1	ENGRANAGE SPECIAL TRAITE	ZAHNKRANZ Z=10-1	
5	B01300104	SPES. 25,5 37 0,2	SHIM	ENTRETOISE	BEILAGSCHEIBE 25,5 37 0,2	
6	F02050101	ANEL. D ARR. ALB. 25-E UNI3653	SEEGER RING	BAGUE SEEGER	SEEGERRING 25-E	
7	B04230610	INGRASS.HYDR M6X1 RITTO L30	HYDR GREASER	GRAISSEUR HYDRAULIQUE	HYDRAUL. FETTBUECHSER	
8	B07S01758	TIRANTE GALOPPINO M16	TIE ROD	TIRANT	ZUGSTANGE	
9	F01020510	VITE M12X1,75X30 U5739 8.8ZN	SCR. M12X1,75X30 U5739 8.8ZN	VIS M12X1,75X30 U5739 8.8ZN	SCHRAU.M12X1,75X30 U5739 8.8ZN	TORN. M12X1,75X30 U5739 8.8ZN
10	F01200293	DADO M12X1,75 U5588 6.8 ZN	NUT	ECROU	MUTTER M12-6S	
11	B01300157	DISTANZIALE 16,6X21,3X165	SPACER	ENTRETOISE	ABSTANZSTUECK 16,6X21,3X165	
12	B00710516	DADO M16X 2 U5588 6.8 ZN	NUT M16X2 U5588 6.8 ZN	ECROU	MUTTER M16-6S	
13	B01519319	RALLA 16X38X5	FIFTH WHEEL	BUTEE	SCREIBE	
14	B01800046	MOLLA 6 30 180C	SPRING	RESSORT	FEDER	
15	F01030208	VITE TTEI M 8X 20-10,9 UMBRAKO	SCREW	VIS	SCHRAUBE TTEI M 8X 20-10.9	
16	B034P0013	PIGNONE Z=13 -1	PINION	PIGNON	RITZEL	
17	B02043016	CUSCINETTO PER TENDITORE	BEARING	ROULEMENT	LAGER	
18	B01710062	ANEL. D ARR. FORO 62-I UNI3654	SEEGER RING	BAGUE SEEGER	SEEGERRING 62-I	
19	B01300100	SPES. 30,3 40 0,5 ZINCATO	SHIM GALV	ENTRETOISE GALV	DISTANZSTUECK 30,3 40 0,5	
20	F02050112	ANEL. D ARR. ALB. 30-E UNI3653	SEEGER RING	BAGUE SEEGER	SEEGERRING 30-E	
21	F04010170	CUSC 6205-2RS CAT.A-ST004	BEARING	ROULEMENT	LAGER 6205-2RS	
22	B03400274	CORONA Z10-1 ISO F52 TRATT	SPROCKET Z=10-1	ENGRANAGE SPECIAL TRAITE	ZAHNKRANZ Z=10-1	
23	B01300104	SPES. 25,5 37 0,2	SHIM	ENTRETOISE	BEILAGSCHEIBE 25,5 37 0,2	
24	F02050101	ANEL. D ARR. ALB. 25-E UNI3653	SEEGER RING	BAGUE SEEGER	SEEGERRING 25-E	
25	B07631842	GUIDA CATENA	CHAIN GUIDE	GUIDE	KETTENFUEHRUNG	
26	B030E1070	CATENA RULLI ISO 16 B-1 70M	ROLLER CHAIN ISO 16 B-1 70 M	CHAINE ROULEAUX	WALZENKETTE	
27	B07S00953	BRACCIO TENDITORE SX	RIGHT TENSIONER ROD	BRAS TENDEUR GAUCHE	RECHTER SPANNARM	
28	F04010170	CUSC 6205-2RS CAT.A-ST004	BEARING	ROULEMENT	LAGER 6205-2RS	
29	B03400274	CORONA Z10-1 ISO F52 TRATT	SPROCKET Z=10-1	ENGRANAGE SPECIAL TRAITE	ZAHNKRANZ Z=10-1	
30	B01300104	SPES. 25,5 37 0,2	SHIM	ENTRETOISE	BEILAGSCHEIBE 25,5 37 0,2	
31	F02050101	ANEL. D ARR. ALB. 25-E UNI3653	SEEGER RING	BAGUE SEEGER	SEEGERRING 25-E	
32	B04210610	INGRAS HYDR A 45 M 6X1	GREASE NIPPLE	GRAISSEUR HYDRAULIQUE	SCHMIERNIPPEL M6X1 45	
33	B01300159	SPES. 25 37 2 ZINCATO	SHIM GALV	ENTRETOISE GALV	DISTANZSTUECK 25 37 2	
34	F02050101	ANEL. D ARR. ALB. 25-E UNI3653	SEEGER RING	BAGUE SEEGER	SEEGERRING 25-E	
35	B07S01441	TIRANTE GALOPPINO M16	TIGHTENING PULLEY ROD M16	TIRANT M16	FUEHRUNGSROLLENSPANNSTANGE M16	
36	F01020510	VITE M12X1,75X30 U5739 8.8ZN	SCR. M12X1,75X30 U5739 8.8ZN	VIS M12X1,75X30 U5739 8.8ZN	SCHRAU.M12X1,75X30 U5739 8.8ZN	TORN. M12X1,75X30 U5739 8.8ZN
37	F01200293	DADO M12X1,75 U5588 CL8 ZN	NUT M12X1,75 U5588 6S ZN	ECROU M12X1,75 U5588 6S ZN	MUTTER M12X1,75 U5588 6S ZN	TUERCA M12X1,75 U5588 6S ZN
38	B01300157	DISTANZIALE 16,6X21,3X165	SPACER	ENTRETOISE	ABSTANZSTUECK 16,6X21,3X165	
39	B00710516	DADO M16X 2 U5588 6.8 ZN	NUT M16X2 U5588 6.8 ZN	ECROU	MUTTER M16-6S	
40	B01519319	RALLA 16X38X5	FIFTH WHEEL	BUTEE	SCREIBE	
41	B01800046	MOLLA 6 30 180C	SPRING	RESSORT	FEDER	
42	B030E1074	CATENA RULLI ISO 16 B-1 74M	ROLLER CHAIN ISO 16 B-1 74M	CHAINE ROULEAUX ISO 16 B-1 74M	WALZENKETTE	
43	B07S01321	BRACCIO TENDITORE DX	RIGHT TENSIONER ARM	BRAS TENDEUR DROIT	RECHTER SPANNARM	
44	F04010170	CUSC.D25 D52 B15 6205 2RS EX	BEARING D25 D52 B15 6205 2RS	ROULEMENT 6205 2RS	LAGER 6205 2RS	COJINETE 6205 2RS
45	B03400274	CORONA Z10-1 ISO F52 TRATT	SPROCKET Z=10-1	ENGRANAGE SPECIAL TRAITE	ZAHNKRANZ Z=10-1	
46	B01300104	SPES. 25,5 37 0,2	SHIM	ENTRETOISE	BEILAGSCHEIBE 25,5 37 0,2	
47	F02050101	ANEL. D ARR. ALB. 25-E UNI3653	SEEGER RING	BAGUE SEEGER	SEEGERRING 25-E	
48	B04210610	INGRAS HYDR A 45 M 6X1	GREASE NIPPLE	GRAISSEUR HYDRAULIQUE	SCHMIERNIPPEL M6X1 45	
49	B01300159	SPES. 25 37 2 ZINCATO	SHIM GALV	ENTRETOISE GALV	DISTANZSTUECK 25 37 2	
50	F01020510	VITE M12X1,75X30 U5739 8.8ZN	SCR. M12X1,75X30 U5739 8.8ZN	VIS M12X1,75X30 U5739 8.8ZN	SCHRAU.M12X1,75X30 U5739 8.8ZN	TORN. M12X1,75X30 U5739 8.8ZN
51	F01200293	DADO M12X1,75 U5588 CL8 ZN	NUT M12X1,75 U5588 6S ZN	ECROU M12X1,75 U5588 6S ZN	MUTTER M12X1,75 U5588 6S ZN	TUERCA M12X1,75 U5588 6S ZN
52	F02050101	ANEL. D ARR. ALB. 25-E UNI3653	SEEGER RING	BAGUE SEEGER	SEEGERRING 25-E	
53	F01410051	ROS.M8 8,4X 17X1,6 U6592 ZN	WASHER M8 8,4X17X1,6 U6592 ZN	RONDELLE	SCHEIBE	
54	B00920208	DADO M8X1 D985 8ZN	NUT M8X1 D985 8ZN	ECROU	SELBSTSICHERNDE MUTTER M8-5S	
55	F01020472	VITE M10X1,5X25 U5739 8.8ZN	SCR. M10X1,5X25 U5739 8.8ZN	VIS M10X1,5X25 U5739 8.8 ZN	SCHRAUBE M10X1,5X25 U5739 8.8	TORNILLO 10X25 U5739 8.8 ZN
56	B07S01441	TIRANTE GALOPPINO M16	TIGHTENING PULLEY ROD M16	TIRANT M16	FUEHRUNGSROLLENSPANNSTANGE M16	
57	B01300923	DISTANZIALE 16,6X21,3X195	SPACER	ENTRETOISE	DISTANZSTUCK 16,6X21,3X195	

TAV_070

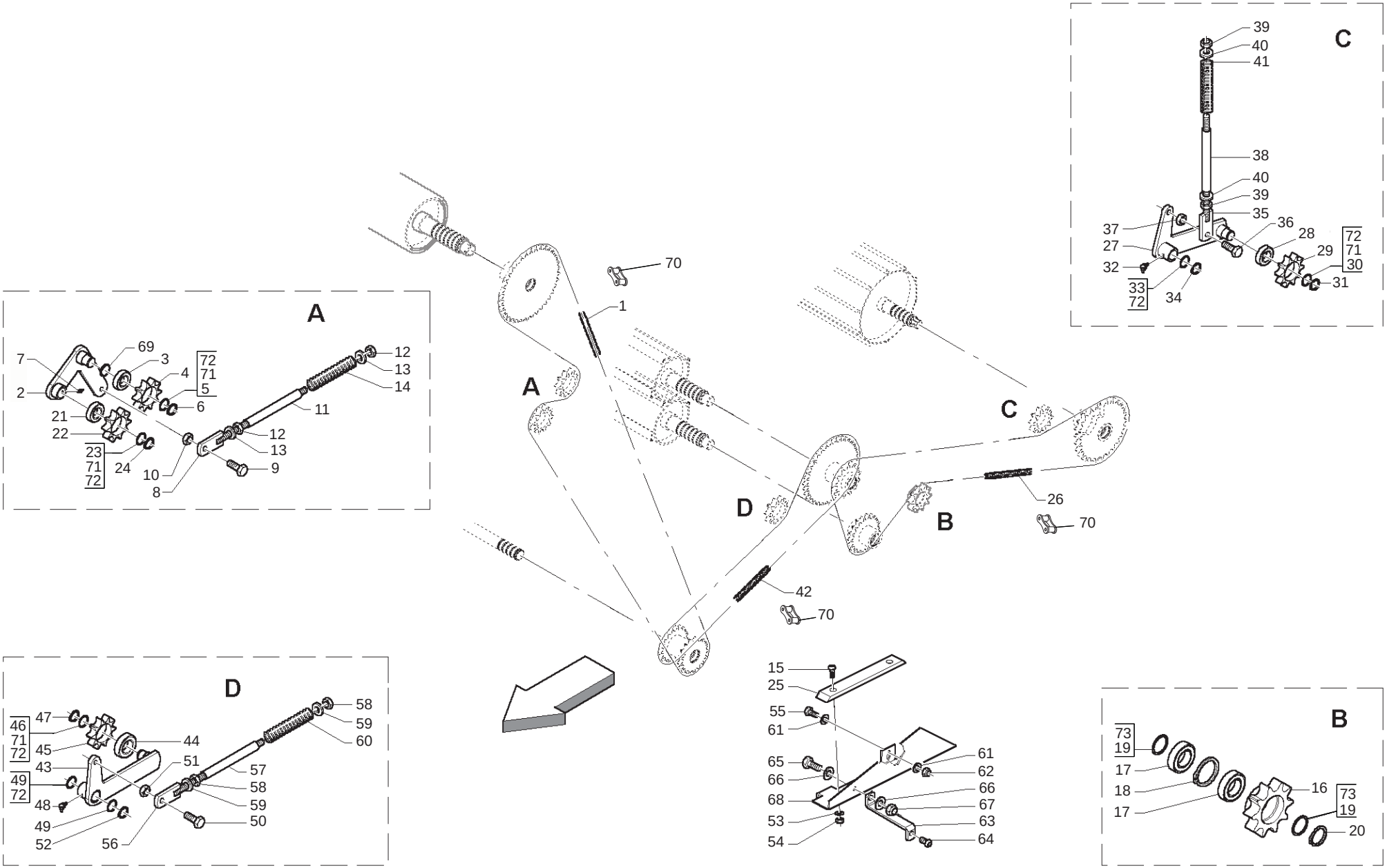
A
7
69
3
72
71
5
4
2
6
21
22
23
71
72
24
10
8
12
13
14
11
12
13
9
C
39
40
41
38
40
39
35
36
37
27
32
33
72
34
28
29
72
71
30
31
70
1
A
C
D
B
26
70
42
70
D
47
46
71
72
45
44
43
49
72
48
49
52
56
51
58
59
60
57
58
59
50
15
25
55
61
65
66
68
53
54
61
62
66
67
63
64
B
73
19
17
18
17
16
73
19
20

TRASMISSIONE
TRANSMISSION

Pos.	Cod.	Descrizione	Description	Description	Benennung	Descripcion
58	B00710516	DADO M16X 2 U5588 6.8 ZN	NUT M16X2 U5588 6.8 ZN	ECROU	MUTTER M16-6S	
59	B01519319	RALLA 16X38X5	FIFTH WHEEL	BUTEE	SCREIBE	
60	B01800067	MOLLA RASCHIATORE	TROTTER SPRING	RESSORT TROTTER	TROTTER FEDER	
61	F01410062	ROS.M10 10,5X 18X 2 U6592 ZN	WASHER M10 10,5X 18X 2 U6592	RONDELLE M10 10,5X18X2 ZN	DICHTUNGSRING M10 10,5X18X2 ZN	RONDANA M10 10,5X18X2 ZN
62	F01230202	DADO M10X1,25 D985 8 ZN	SELF-LOCKING NUT	ECROU NYLSTOP	SELBSTSICHERNDE MUTTER M10-5S	
63	B0C005427	SOSTEGNO LAT. SX INF.CARTER	GUARD FEEDER LEFT SIDE SUPPORT	SUPPORT LATERAL GAUCHE INF. CA	ANSCHLUSS SEITEN	
64	B004N0820	VITE NERA TTEI M 8X 20-10,9	SCREW	VIS	SCHRAUBE TTEI M 8X20-10,9	
65	F01020510	VITE M12X1,75X30 U5739 8.8ZN	SCR. M12X1,75X30 U5739 8.8ZN	VIS M12X1,75X30 U5739 8.8ZN	SCHRAU.M12X1,75X30 U5739 8.8ZN	TORN. M12X1,75X30 U5739 8.8ZN
66	F01410076	ROS.M12 13X 20X2,0 U1749 ZN	WASHER	RONDELLE	SCHEIBE	
67	B00920412	DADO M12X1,75 D985 8 ZN	NUT	ECROU	SELBSTSICHERNDE MUTTER M12-5S	
68	B0C004908	CARTER	GUARD	CARTER	ABDECKBLECH	
69	B013C0024	SPES. 26,5X37X2	SHIM 26,5X37X2	EPAISSEUR 26,5X37X2	SCHEIBE 26,5X37X2	
70	B030E0017	GIUNTO MOLL N26 ISO 16 B-1	SPRING JOINT N.26 ISO 16 B-1	JOINT RESSORT	KETTENFEDER	
71	B01300104	SPES. 25,5 37 0,2	SHIM	ENTRETOISE	BEILAGSCHEIBE 25,5 37 0,2	
72	B01300105	SPES. 25,5 37 0,5	SHIM	ENTRETOISE	DISTANZSTUECK 25,5 37 0,5	
73	B01300152	SPES. 30 40 1,5 ZINCATO	THICKNESS 30 40 1,5 GALV	ENTRETOISE 30 40 1,5	DISTANKSTUECK 30 40 1,5	

TAV_074

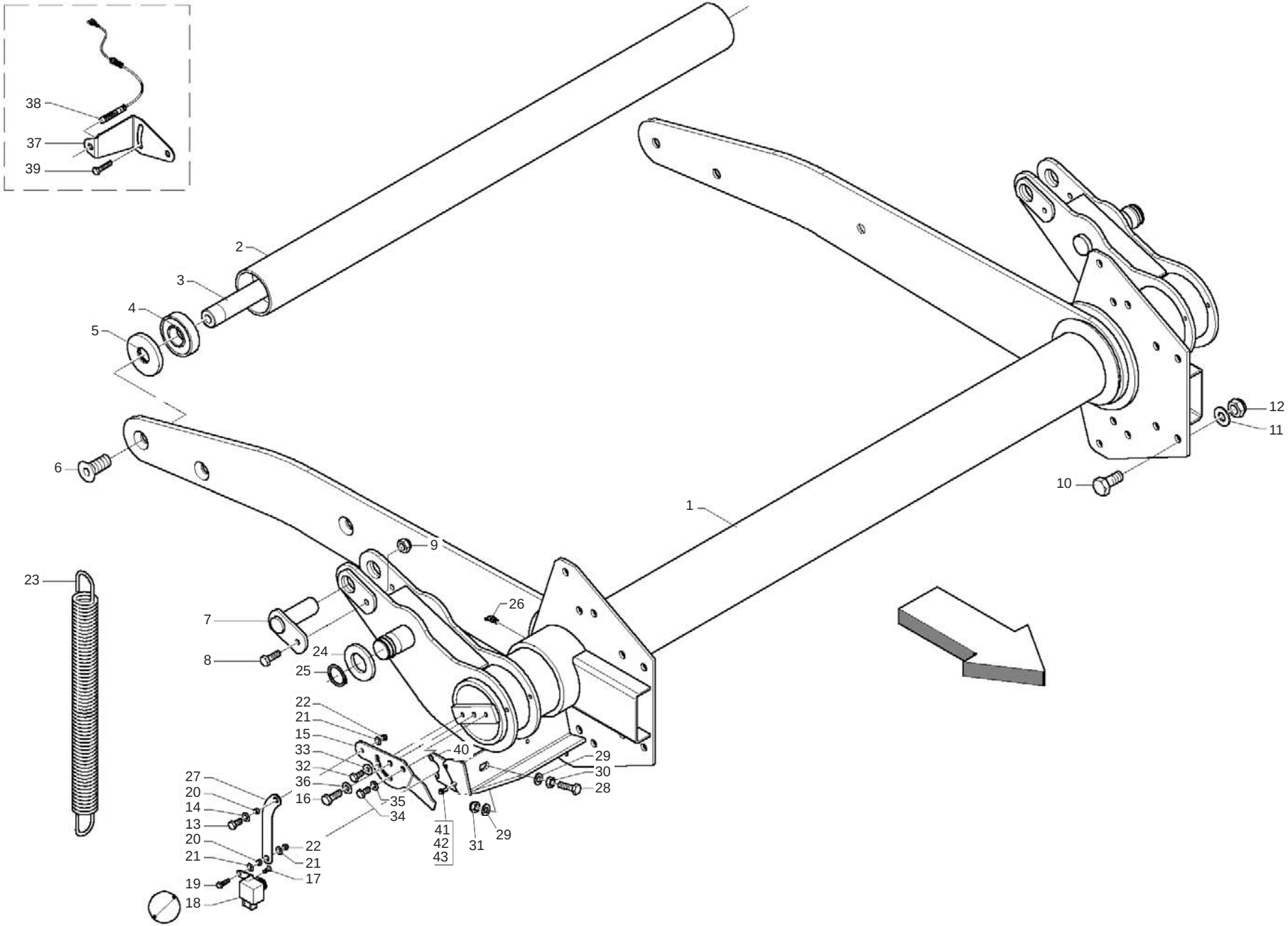

MASCHIO

cod. B0D5P0108

BILANCIERE
BELT TENSIONER ARM

TAV_074

Pos.	Cod.	Descrizione	Description	Description	Benennung	Descripcion
1	B07SP0072	BRACCIO TENDICINGHIE LT	LT BELTS STRETCHING ARM	BRAS TENDEUR COURROIES LT	RIEMENSPANNERARM	
2	B03500165	RULLO FOLLE	IDLE ROLLER	ROULEAU FOU	UMLENKWALZE	
3	B03500213	ALBERO CORTO	SHORT SHAFT	ARBRE COURT	KURZE WELLE	
4	B02040002	CUSCINETTO 6307-2RS CAT.KST004	BEARING	ROULEMENT	LAGER 6307-2RS	
5	B01300623	CHIUSURA RULLI FOLLI	IDLE ROLLER LOCK	FERMETURE ROULEAUX FOUX	UMLENKWALZENVERSCHLUSS	
6	F01030148	VITE M16X2X35 U5933 10.9ZD	SCREW M16X2X35 U5933 10.9ZD	VIS M16X2X35 U5933 10.9ZD	SCHRAUBE M16X2X35 U5933 10.9ZD	TORNILLO M16X2X35 U5933 10.9ZD
7	B07S00936	SPINA MARTINETTO PRESS.BALLA	JACK PIN	AXE VERIN	ZYLINDERBOLZEN	
8	F01020065	VITE M 8X1,25X 30 U5737 8.8ZN	SCREW M 8X1,25X 30 U5737 8.8Z			
9	B00920208	DADO M8X1 D985 8ZN	NUT M8X1 D985 8ZN	ECROU	SELBSTSICHERNDE MUTTER M8-5S	
10	F01020510	VITE M12X1,75X30 U5739 8.8ZN	SCR. M12X1,75X30 U5739 8.8ZN	VIS M12X1,75X30 U5739 8.8ZN	SCHRAU.M12X1,75X30 U5739 8.8ZN	TORN. M12X1,75X30 U5739 8.8ZN
11	F01410076	ROS.M12 13X 20X2,0 U1749 ZN	WASHER	RONDELLE	SCHEIBE	
12	B00920412	DADO M12X1,75 D985 8 ZN	NUT	ECROU	SELBSTSICHERNDE MUTTER M12-5S	
13	F01020408	VITE M6X1X30 U5739 8.8ZN	SCR. M6X1X30 U5739 8.8ZN	VIS M 6X1X30	SCHRAUBE M 6X1X30	TORNILLO M 6X1X30
14	F01420035	ROS.M6 6,4X 18X1,6 U6593 ZN	WASHER	RONDELLE	SCHEIBE	
15	B0C6P0092	REGOLO	RULE	REGLE	EINSTELLER	
16	F01020470	VITE M10X1,5X20 U5739 8.8ZN	SCR. M10X1,5X20 U5739 8.8ZN	VIS M10X1,5X20 U5739 8.8 ZN	SCHRAUBE M10X1,5X20 U5739 ZN	TORNILLOM10X1,5X20 U5739 8.8ZN
17	B00440510	VITE TSPEI M 5X 10-10.9 UNI 5	SCREW	VIS	SCHRAUBE TSPEI M5X 10-10.9	
18	BZMRP0002	POTENZIOMETRO DIMENSIONE BALLA	POTENTIOMETER CABLE	POTENTIOMETRE CABLE	POTENTIOMETER ADAPTERKABEL	
19	F01020408	VITE M6X1X30 U5739 8.8ZN	SCR. M6X1X30 U5739 8.8ZN	VIS M 6X1X30	SCHRAUBE M 6X1X30	TORNILLO M 6X1X30
20	B01300866	BOCCOLA DI MOVIMENTO	BUSH	DOUILLE	BUCHSE	
21	F01420035	ROS.M6 6,4X 18X1,6 U6593 ZN	WASHER	RONDELLE	SCHEIBE	
22	B00920106	DADO M6X1 D985 8ZN	NUT	ECROU	SELBSTSICHERNDE MUTTER M6-5S	
23	B01800094	MOLLA BILANCIERE LT	SPRING	RESSORT BALANCIER LT	FEDER	
24	B01519128	RALLA 35 60 6	35 52 6 FIFTH WHEEL	RONDELLE	GEWINDERING 35 52 6	
25	B01700035	ANEL. D ARR. ALB. 35-E UNI3653	SEEGER RING	BAGUE SEEGER	SEEGERRING 35-E	
26	B04211010	INGRAS HYDR M10X1 45	GREASE NIPPLE	GRAISSEUR HYDRAULIQUE	SCHMIERNIPPEL M10X1 45	
27	B0C6P0093	SPOSTAMENTO SENSORE	SENSOR SHIFT	DEPLACEMENT CAPTEUR	SENSOR VERSCHIEBUNG	
28	B00181050	VITE ZN.TE M10X 50-8.8 UNI5739	SCREW ZN.TE M10X50-8.8 UNI5739			
29	F01410062	ROS.M10 10,5X 18X 2 U6592 ZN	WASHER M10 10,5X 18X 2 U6592	RONDELLE M10 10,5X18X2 ZN	DICHTUNGSRING M10 10,5X18X2 ZN	RONDANA M10 10,5X18X2 ZN
30	F01200416	DADO M10X1,5 U5589 CL8 ZN 6SZN	NUT M10X1,5 U5589 6SZN	ECROU 10 UNI 5589 6.8 ZN	MUTTER 10 UNI 5589 6.8 ZN	TUERCA 10 UNI 5589 6.8 ZN
31	F01230202	DADO M10X1,25 D985 8 ZN	SELF-LOCKING NUT	ECROU NYLSTOP	SELBSTSICHERNDE MUTTER M10-5S	
32	F01020436	VITE M8X1,25X20 U5739 8.8ZN	SCR. M8X1,25X20 U5739 8.8ZN	VIS M8X1,25X 20 U5739 8.8 ZN	SCHRAUBE M8X1,25X20U5739 8.8ZN	TORN. M8X1,25X20 U5739 8.8 ZN
33	F01420048	ROS.M8 8,4X 24X 2 U6593 ZN	WASHER	RONDELLE	SCHEIBE	
34	F01020436	VITE M8X1,25X20 U5739 8.8ZN	SCR. M8X1,25X20 U5739 8.8ZN	VIS M8X1,25X 20 U5739 8.8 ZN	SCHRAUBE M8X1,25X20U5739 8.8ZN	TORN. M8X1,25X20 U5739 8.8 ZN
35	F01020436	VITE M8X1,25X20 U5739 8.8ZN	SCR. M8X1,25X20 U5739 8.8ZN	VIS M8X1,25X 20 U5739 8.8 ZN	SCHRAUBE M8X1,25X20U5739 8.8ZN	TORN. M8X1,25X20 U5739 8.8 ZN
36	F01410062	ROS.M10 10,5X 18X 2 U6592 ZN	WASHER M10 10,5X 18X 2 U6592	RONDELLE M10 10,5X18X2 ZN	DICHTUNGSRING M10 10,5X18X2 ZN	RONDANA M10 10,5X18X2 ZN
37	B0C6P0110	PORTA SENSORE	SENSOR SUPPORT			
38	B0E0P0013	SENS DIG.SCATOLA E BILANCERE	DIGITAL SENSOR PROXIMITY M12	CAPTEUR DIGITAL AVEC PROXIMITY	SENSOR MIT PROXIMITY M 12	
39	B00180655	VITE M6X1X 55 U5739 8.8ZN	SCREW	VIS	ZINKSCHRAUBE TE M6X55-8.8 UNI	
40	B0C6P0401	PROLUNGA ATTACCO POTENZIOMETRO	EXTENSION	RALLONGE	VERLAENGERUNG	
41	B00920106	DADO M6X1 D985 8ZN	NUT	ECROU	SELBSTSICHERNDE MUTTER M6-5S	
42	B00180620	VITE M6X1X20 U5739 8.8ZN	SCREW	VIS	SCHRAUBE	
43	F01410037	ROS.M6 6,4X12,5X1,6 U6592 ZN	WASHER	RONDELLE	BEILAGSCHEIBE 6	

TAV_078

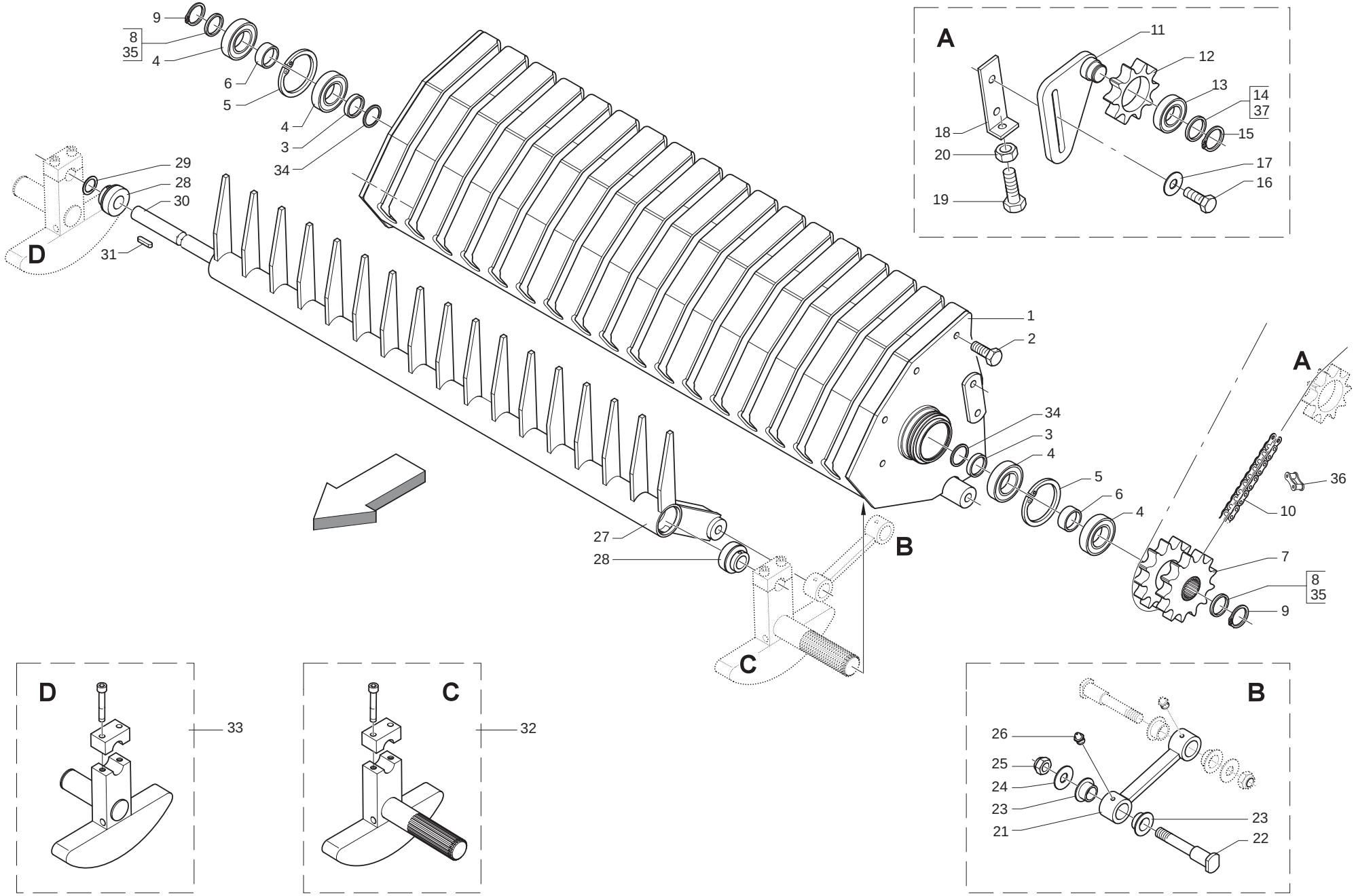

MASCHIO

cod. B0D5P0108

INFALDATORE
FEEDING SYSTEM

TAV_078

Pos.	Cod.	Descrizione	Description	Description	Benennung	Descripcion
1	B07S00967	TELAIO INFALDATORE	FEEDING SYSTEM FRAME	CHASSIS AMENEUR	ZUBRINGER RAHMEN	
2	F01020508	VITE M12X1,75X 25 U5739 8.8ZN	SCREW	VIS	SCHRAUBE	
3	B01300605	DISTANZIALE 35X42X 5	SPACER	ENTRETOISE	DISTANZSTUECK 35X42X5	
4	B02043517	CUSC.. 6207-2RS CAT.B-ST004	BEARING	ROULEMENT	LAGER 6207-2RS	
5	F02050403	ANELLO E. DI 72X 2,5 U7437 C7	SEEGER RING E.72X2,5 U7437 C70	SEEGER E. 72X 2,5 U7437 C70	SEEGERING E. 72X 2,5 U7437 C70	ANILLO E. 72X 2,5 U7437 C70
6	B01300523	DISTANZIALE 35X 45X12,5	SPACER	ENTRETOISE	DISTANZSTUECK 35X45X12,5	
7	B03400237	INGR.DOPPIO Z12-12 1 INFALD.	DOUBLE GEAR Z=12 21 1 FOR RAK	ENGRENAGE DOUBLE	DOPPEL ZAHNRAD Z=12-12 1	
8	B01534416	SPES. 35 43 1 ZINCATO	SHIM	ENTRETOISE	AUSGLEICHSCHEIBE 35X43X1	
9	F02050145	ANELLO E. DE 35X1,5 U7435 C70	SEEGER RING D.35	BAGUE SEEGER D.35	SEEGERRING D.35	ANILLO SEEGER D.35
10	B030E0017	GIUNTO MOLL N26 ISO 16 B-1	SPRING JOINT N.26 ISO 16 B-1	JOINT RESSORT	KETTENFEDER	
11	B07S00958	TIRANTE FISSO	TIE ROD	TIRANT FIXE	ZUGSTANGE	
12	B03400274	CORONA Z10-1 ISO F52 TRATT	SPROCKET Z=10-1	ENGRANAGE SPECIAL TRAITE	ZAHNKRANZ Z=10-1	
13	F04010170	CUSC.D25 D52 B15 6205 2RS EX	BEARING D25 D52 B15 6205 2RS	ROULEMENT 6205 2RS	LAGER 6205 2RS	COJINETE 6205 2RS
14	B01300104	SPES. 25,5 37 0,2	SHIM	ENTRETOISE	BEILAGSCHEIBE 25,5 37 0,2	
15	F02050101	ANEL. D ARR. ALB. 25-E UNI3653	SEEGER RING	BAGUE SEEGER	SEEGERRING 25-E	
16	F01020152	VITE M12X1,75X40 U5737 8.8ZN	SCR. M12X1,75X40 U5737 8.8ZN	VIS M12X1,75X40 U5737 8.8 ZN	SCHRAUBE M12X1,75X40U57378.8ZN	TORNIL.M12X1,75X40 U5737 8.8ZN
17	B01516038	RALLA 13 32 5	FIFTH WHEEL	BUTEE	SCHEIBE	
18	B0C005308	TIRANTE INFALDATORE	FEEDER TIE ROD	TIRANT AMENEUR	RAFFER ZUSTAB	
19	F01020521	VITE M12X1,75X65 U5739 8.8ZN	SCR. M12X1,75X65 U5739 8.8ZN	VIS M12X1,75X65 U5739 8.8ZN	SCHRAU.M12X1,75X65 U5739 8.8ZN	TORN.M12X1,75X65 U5739 8.8ZN
20	F01200293	DADO M12X1,75 U5588 CL8 ZN	NUT M12X1,75 U5588 6S ZN	ECROU M12X1,75 U5588 6S ZN	MUTTER M12X1,75 U5588 6S ZN	TUERCA M12X1,75 U5588 6S ZN
21	B07S00966	BIELLA INFALDATORE	FEEDER CONNECTING ROD	BIELLE AMENEUR	RAFFERPLEUELSTANGE	
22	B03500017	PERNO BIELLA INFALDATORE	CONNECTING ROD PIN ENTRY120	TOURILLON BIELLE	PLEUELZAPFEN	
23	B02500002	BUSSOLA NYLON INFAL.22X28X16,5	BUSH NYLON 22X28X16,5	DOUILLE	NYLONBUCHSE	
24	B01300040	RALLA 16,2X40X3 OTTONE	FIFTH WHEEL	BUTEE	LAGERSCHALE 16,2X40X3	
25	B00920516	DADO M16X 1,5 D985 6S ZN	NUT M16X1,5 D985 6S ZN	ECROU	SELBSTSICHERNDE MUTTER M16-5S	
26	F01100011	ING.M 6X1 7663-A 9SMNPB28 ZN	GREASE NIPPLE M6X1 7663-A ZN	GRAISS. A BILLE M6X1 7663A ZN	SCHMIERBUECHE M6X1 7663-A ZN	ENGRAS. DE ESFE. M6X1 7663-AZN
27	B07S00983	INFALDATORE NL	FEEDER	AMENEUR	RAFFER	
28	B07S00126	CUSCINETTO CON RALLA INFALDAT.	BEARING WITH FIFTH WHEEL	ROULEMENT AVEC BUTEE	LAGER MIT RING	
29	B01300106	SPES. 25,5 37 1 ZINCATO	SHIM GALV	ENTRETOISE GALV	DISTANZSTUECK 25,5 37 1	
30	B03500038	ALBERO INFALDATORE	FEEDER SHAFT	ARBRE AMENEUR	RAFFER ANTRIEBSWELLE	
31	F02150063	LINGUETTA 8X 7X 22 U6604A	TANG 8X 7X 22 U6604A			
32	B07S00978	BIELLA MOTORE INFALDATORE	MOTOR CONNECTING ROD	BIELLE MOTEUR AMENEUR	RAFFER TREIBSTANGE	
33	B07S00979	BIELLA FOLLE INFALDATORE	IDLE CONNECTING ROD	BIELLE FOLLE AMENEUR	RAFFER UMLENKSTANGE	
34	B01522427	SPES. 35 47 2	SHIM	ENTRETOISE	SCHEIBE	
35	B01534415	SPES. 35 43 0,5 ZINCATO	SHIM	ENTRETOISE	AUSGLEICHSCHEIBE 35X43X0,5	
36	B030E1039	CATENA RULLI ISO 16 B-1 39M	ROLLER CHAIN ISO16 B-1 39M	CHAINE ROULEAUX	WALZENKETTE ISO 16 B-1 39M	
37	B01300104	SPES. 25,5 37 0,2	SHIM	ENTRETOISE	BEILAGSCHEIBE 25,5 37 0,2	

TAV_085

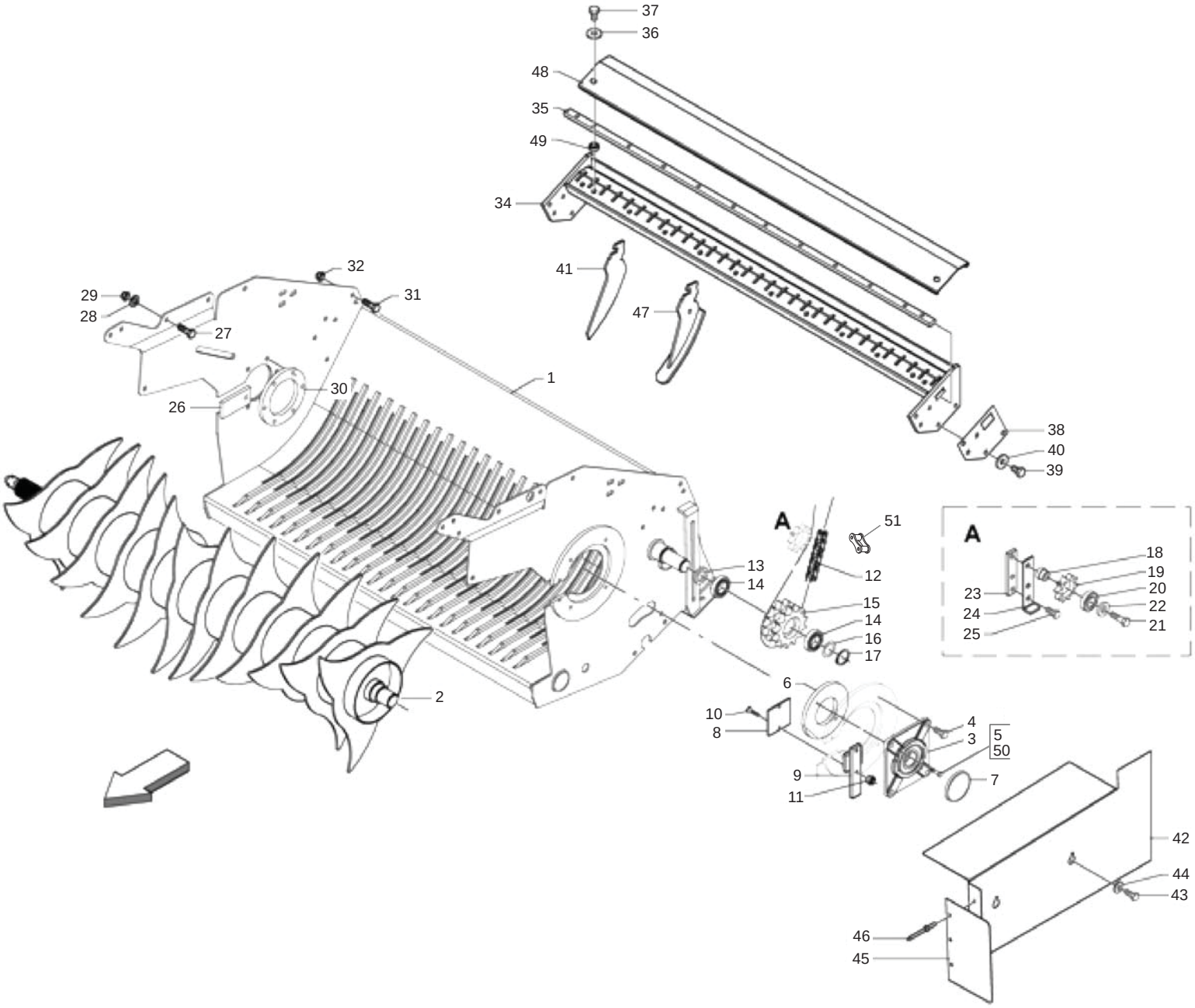

MASCHIO

cod. B0D5P0108

ROTOR: TELAIO + ROTORE
ROTOR: FRAME + ROTOR

TAV_085

Pos.	Cod.	Descrizione	Description	Description	Benennung	Descripcion
1	B07SP0290	TELAIO ROTOR	ROTOR FRAME			
2	B07SP0289	ROTORE CON DISCHI	ROTOR BLADES			
3	B02700153	SUPPORTO FLANGIATO	FLANGED SUPPORT	SUPPORT POUR ROTOR CUT	FLANSCHLAGER	
4	F01020510	VITE M12X1,75X30 U5739 8.8ZN	SCR. M12X1,75X30 U5739 8.8ZN	VIS M12X1,75X30 U5739 8.8ZN	SCHRAU.M12X1,75X30 U5739 8.8ZN	TORN. M12X1,75X30 U5739 8.8ZN
5	F01410051	ROS.M8 8,4X 17X1,6 U6592 ZN	WASHER M8 8,4X17X1,6 U6592 ZN	RONDELLE	SCHEIBE	
6	B01300714	CONTROFLANGIA SUPP. FOLLE	IDLE SUPPORT COUNTERFLANGE	CONTRE-BRISE SUPPORT FOU	GEGENFLANSCH	
7	B04400001	CAP. CHIUSO 110X10 TIPO C	CAP	COUVERCLE	GESCHLOSSENE KAPPE	
8	B0C003746	COMPENSO FESSURA SX	LEFT SLOT COMPENSATION	EPAISSEURE FENTE GAUCHE	LINKER SPALTENAUSGLEICH	
9	B07SP0046	FERMO COMPENSO LATO SX	LEFT SIDE SHIM LOCK	ARRET EPAISSEUR COTE GAUCHE	VERDICHTUNG BLOCK	
10	F01030060	VITE M8X1,25X35 U5933 10.9ZD	SCREW M8X1,25X35 U5933 10.9ZD	VIS M8X1,25X35 U5933 10.9ZD	SCHRA.M8X1,25X35 U5933 10.9ZD	TORN. M8X1,25X35 U5933 10.9ZD
11	B00920208	DADO M8X1 D985 8ZN	NUT M8X1 D985 8ZN	ECROU	SELBSTSICHERNDE MUTTER M8-5S	
12	B030E0017	GIUNTO MOLL N26 ISO 16 B-1	SPRING JOINT N.26 ISO 16 B-1	JOINT RESSORT	KETTENFEDER	
13	B01330957	DISTANZIALE 35-48-7	SPACER	ENTRETOISE	DISTANZSTUECK 35X48X7	
14	B02043514	CUSC.. 6007-2RS CAT.B-ST004	BEARING	ROULEMENT	LAGER 6007-2RS	
15	B03400005	CORONA Z-12 12 1	SPROCKET Z-12 12 1	COURONNE	KRANZ Z-12 12 1	
16	B01534416	SPES. 35 43 1 ZINCATO	SHIM	ENTRETOISE	AUSGLEICHSCHEIBE 35X43X1	
17	B01700035	ANEL. D ARR. ALB. 35-E UNI3653	SEEGER RING	BAGUE SEEGER	SEEGERRING 35-E	
18	B01300302	PERNO GALOPPINO	PIN	TOURILLON	BOLZEN FUER KETTENZAHNRAD	
19	B03400274	CORONA Z10-1 ISO F52 TRATT	SPROCKET Z=10-1	ENGRANAGE SPECIAL TRAITE	ZAHNKRANZ Z=10-1	
20	F04010170	CUSC.D25 D52 B15 6205 2RS EX	BEARING D25 D52 B15 6205 2RS	ROULEMENT 6205 2RS	LAGER 6205 2RS	COJINETE 6205 2RS
21	F01020160	VITE M12X1,75X60 U5737 8.8ZN	SCR. M12X1,75X60 U5737 8.8ZN	VIS M12X1,75X60 U5737 8.8 ZN	SCHRA.M12X1,75X60 U5737 8.8 ZN	TORN. M12X1,75X60 U5737 8.8 ZN
22	B01518412	RALLA 12 38 5	FIFTH WHEEL	BUTEE	SCHEIBE	
23	B0C002390	FERMO	LOCK	ARRET	ARRETIERUNG	
24	B0C002389	REGISTRO	REGISTER	VANNE	STELLVORRICHTUNG	
25	F01020510	VITE M12X1,75X30 U5739 8.8ZN	SCR. M12X1,75X30 U5739 8.8ZN	VIS M12X1,75X30 U5739 8.8ZN	SCHRAU.M12X1,75X30 U5739 8.8ZN	TORN. M12X1,75X30 U5739 8.8ZN
26	B0C003748	COMPENSO FESSURA DX	RIGHT SLOT COMPENSATION	EPAISSEUR FENTE DROITE	RECHTER SPALTENAUSGLEICH	
27	F01020510	VITE M12X1,75X30 U5739 8.8ZN	SCR. M12X1,75X30 U5739 8.8ZN	VIS M12X1,75X30 U5739 8.8ZN	SCHRAU.M12X1,75X30 U5739 8.8ZN	TORN. M12X1,75X30 U5739 8.8ZN
28	F01410076	ROS.M12 13X 20X2,0 U1749 ZN	WASHER	RONDELLE	SCHEIBE	
29	B00920412	DADO M12X1,75 D985 8 ZN	NUT	ECROU	SELBSTSICHERNDE MUTTER M12-5S	
30	B01300509	CONTROFLANGIA SUPP. MOT.	MOTOR SUPPORT COUNTERFLANGE	CONTRE-FLASQUE SUPPORT MOTEUR	MOTORHALTERGEGENFLANSCH	
31	F01020514	VITE M12X1,75X40 U5739 8.8ZN	SCR. M12X1,75X40 U5739 8.8ZN	VIS M12X1,75X40 U5739 8.8ZN	SCHRA. M12X1,75X40 U5739 8.8ZN	TORN. M12X1,75X40 U5739 8,8ZN
32	B00920412	DADO M12X1,75 D985 8 ZN	NUT	ECROU	SELBSTSICHERNDE MUTTER M12-5S	
34	B07S01801	TRAVERSA TOPCUT NEW	CROSS BAR	TRAVERSE TOPCUT NEW	QUERTRAEGER	
35	B0C005018	ASTA DI SOSTEGNO	SUPPORT ROD	BARRE DE SUPPORT	STUETZSTANGE	
36	F01410062	ROS.M10 10,5X 18X 2 U6592 ZN	WASHER M10 10,5X 18X 2 U6592	RONDELLE M10 10,5X18X2 ZN	DICHTUNGSRING M10 10,5X18X2 ZN	RONDANA M10 10,5X18X2 ZN
37	B00181030	VITE M10X1,5 X 30 U5739 8.8ZN	SCREW	VIS	SCHRAUBE	
38	B0C003616	SPES. TRAVERSA RASCHIATORI	SCRAPER CROSS MEMBER SHIM	EPAISSEUR TRAVERSE RACLEUR	ABSTREIFER TRAEGER DISTANZSCHE	
39	F01020508	VITE M12X1,75X 25 U5739 8.8ZN	SCREW	VIS	SCHRAUBE	
40	B01515797	RALLA 13 25 5	FIFTH WHEEL	BUTEE	SCHEIBE	
41	B0C003977	RASCHIATORE SMONTABILE	DETACHABLE SCRAPER	RACLEUR DEMONTABLE	DEMONTIERBARER ABSTREIFER	
42	B0C005268G	CARTER CUT	CUT GUARD			
43	F01020436	VITE M8X1,25X20 U5739 8.8ZN	SCR. M8X1,25X20 U5739 8.8ZN	VIS M8X1,25X 20 U5739 8.8 ZN	SCHRAUBE M8X1,25X20U5739 8.8ZN	TORN. M8X1,25X20 U5739 8.8 ZN
44	F01410051	ROS.M8 8,4X 17X1,6 U6592 ZN	WASHER M8 8,4X17X1,6 U6592 ZN	RONDELLE	SCHEIBE	
45	B0C004239	PROLUNGA CARTER CUT	CUT GUARD EXTENSION	RALLONGE CARTER CUT	VERLAENGERUNG CARTER CUT	
46	F02250111	RIVETTO STR. 4X 6 U9200A AL	RIVET	RIVET	ABREISSNIETEN 4X8	
47	B07SP0298	RASCHIATORE E PATTINO HTR	SCRAPER			
48	B0C3P0153	PROTEZIONI RASCHIATORI	PROTECTION	PROTECTION	SCHEUTZ ABSTERIFER	
49	B013C0126	DISTANZIALE	SPACER	ENTRETOISE	DISTANZSTUECK	
50	B00190850	VITE M 8X1,25X 50 U5737 8.8ZN	SCREW	VIS	VERZINKTE SCHRAUBE	
51	B030E1039	CATENA RULLI ISO 16 B-1 39M	ROLLER CHAIN ISO16 B-1 39M	CHAINE ROULEAUX	WALZENKETTE ISO 16 B-1 39M	

TAV_090

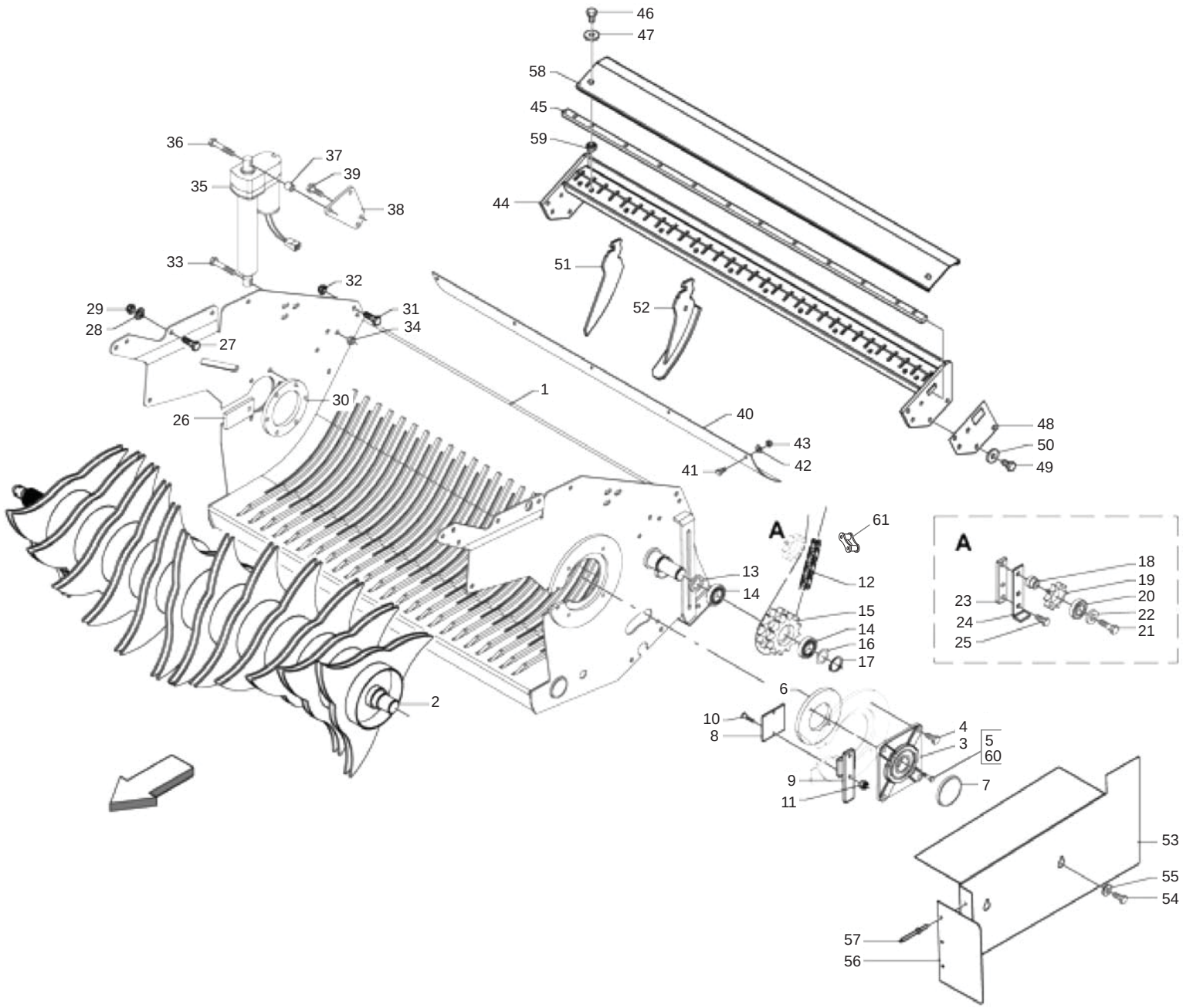

MASCHIO

cod. B0D5P0108

CUT 13: TELAIO + ROTORE
CUT 13: FRAME + ROTOR

TAV_090

Pos.	Cod.	Descrizione	Description	Description	Benennung	Descripcion
1	B07S01791	TELAIO TOPCUT NEW	NEW TOPCUT FRAME			
2	B07S01944	ROT. CON DISCHI A 3 PUNTE HTC	ROTOR WITH 3 POINTED DISCS HTC	ROTOR AVEC DISQUES A 3 POINTS	ROTOR MIT SCHEIBEN	
3	B02700153	SUPPORTO FLANGIATO	FLANGED SUPPORT	SUPPORT POUR ROTOR CUT	FLANSCHLAGER	
4	F01020510	VITE M12X1,75X30 U5739 8.8ZN	SCR. M12X1,75X30 U5739 8.8ZN	VIS M12X1,75X30 U5739 8.8ZN	SCHRAU.M12X1,75X30 U5739 8.8ZN	TORN. M12X1,75X30 U5739 8.8ZN
5	B00190850	VITE M 8X1,25X 50 U5737 8.8ZN	SCREW	VIS	VERZINKTE SCHRAUBE	
6	B01300714	CONTROFLANGIA SUPP. FOLLE	IDLE SUPPORT COUNTERFLANGE	CONTRE-BRISE SUPPORT FOU	GEGENFLANSCH	
7	B04400001	CAP. CHIUSO 110X10 TIPO C	CAP	COUVERCLE	GESCHLOSSENE KAPPE	
8	B0C003746	COMPENSO FESSURA SX	LEFT SLOT COMPENSATION	EPAISSEURE FENTE GAUCHE	LINKER SPALTENAUSGLEICH	
9	B07SP0046	FERMO COMPENSO LATO SX	LEFT SIDE SHIM LOCK	ARRET EPAISSEUR COTE GAUCHE	VERDICHTUNG BLOCK	
10	F01030060	VITE M8X1,25X35 U5933 10.9ZD	SCREW M8X1,25X35 U5933 10.9ZD	VIS M8X1,25X35 U5933 10.9ZD	SCHRA.M8X1,25X35 U5933 10.9ZD	TORN. M8X1,25X35 U5933 10.9ZD
11	B00920208	DADO M8X1 D985 8ZN	NUT M8X1 D985 8ZN	ECROU	SELBSTSICHERNDE MUTTER M8-5S	
12	B030E0017	GIUNTO MOLL N26 ISO 16 B-1	SPRING JOINT N.26 ISO 16 B-1	JOINT RESSORT	KETTENFEDER	
13	B01330957	DISTANZIALE 35-48-7	SPACER	ENTRETOISE	DISTANZSTUECK 35X48X7	
14	B02043514	CUSC.. 6007-2RS CAT.B-ST004	BEARING	ROULEMENT	LAGER 6007-2RS	
15	B03400005	CORONA Z-12 12 1	SPROCKET Z-12 12 1	COURONNE	KRANZ Z-12 12 1	
16	B01534416	SPES. 35 43 1 ZINCATO	SHIM	ENTRETOISE	AUSGLEICHSCHEIBE 35X43X1	
17	B01700035	ANEL. D ARR. ALB. 35-E UNI3653	SEEGER RING	BAGUE SEEGER	SEEGERRING 35-E	
18	B01300302	PERNO GALOPPINO	PIN	TOURILLON	BOLZEN FUER KETTENZAHNRAD	
19	B03400274	CORONA Z10-1 ISO F52 TRATT	SPROCKET Z=10-1	ENGRANAGE SPECIAL TRAITE	ZAHNKRANZ Z=10-1	
20	F04010170	CUSC.D25 D52 B15 6205 2RS EX	BEARING D25 D52 B15 6205 2RS	ROULEMENT 6205 2RS	LAGER 6205 2RS	COJINETE 6205 2RS
21	F01020160	VITE M12X1,75X60 U5737 8.8ZN	SCR. M12X1,75X60 U5737 8.8ZN	VIS M12X1,75X60 U5737 8.8 ZN	SCHRA.M12X1,75X60 U5737 8.8 ZN	TORN. M12X1,75X60 U5737 8.8 ZN
22	B01518412	RALLA 12 38 5	FIFTH WHEEL	BUTEE	SCHEIBE	
23	B0C002390	FERMO	LOCK	ARRET	ARRETIERUNG	
24	B0C002389	REGISTRO	REGISTER	VANNE	STELLVORRICHTUNG	
25	F01020510	VITE M12X1,75X30 U5739 8.8ZN	SCR. M12X1,75X30 U5739 8.8ZN	VIS M12X1,75X30 U5739 8.8ZN	SCHRAU.M12X1,75X30 U5739 8.8ZN	TORN. M12X1,75X30 U5739 8.8ZN
26	B0C003748	COMPENSO FESSURA DX	RIGHT SLOT COMPENSATION	EPAISSEUR FENTE DROITE	RECHTER SPALTENAUSGLEICH	
27	F01020510	VITE M12X1,75X30 U5739 8.8ZN	SCR. M12X1,75X30 U5739 8.8ZN	VIS M12X1,75X30 U5739 8.8ZN	SCHRAU.M12X1,75X30 U5739 8.8ZN	TORN. M12X1,75X30 U5739 8.8ZN
28	F01410076	ROS.M12 13X 20X2,0 U1749 ZN	WASHER	RONDELLE	SCHEIBE	
29	B00920412	DADO M12X1,75 D985 8 ZN	NUT	ECROU	SELBSTSICHERNDE MUTTER M12-5S	
30	B01300509	CONTROFLANGIA SUPP. MOT.	MOTOR SUPPORT COUNTERFLANGE	CONTRE-FLASQUE SUPPORT MOTEUR	MOTORHALTERGEGENFLANSCH	
31	F01020514	VITE M12X1,75X40 U5739 8.8ZN	SCR. M12X1,75X40 U5739 8.8ZN	VIS M12X1,75X40 U5739 8.8ZN	SCHRA. M12X1,75X40 U5739 8.8ZN	TORN. M12X1,75X40 U5739 8,8ZN
32	B00920412	DADO M12X1,75 D985 8 ZN	NUT	ECROU	SELBSTSICHERNDE MUTTER M12-5S	
33	F01020519	VITE M12X1,75X 60 U5739 8.8ZN	SCREW M12X1,75X 60 U5739 8.8ZN			
34	B00920412	DADO M12X1,75 D985 8 ZN	NUT	ECROU	SELBSTSICHERNDE MUTTER M12-5S	
35	B0E000064	ATTUATORE COLTELLI	KNIVES ACTUATOR D12 21B5 04	ACTIONNEUR	E-MOTOR WARNER D12 21B5 04	
36	F01020524	VITE M12X1,75X90 U5739 8.8ZN	SCR. M12X1,75X90 U5739 8.8ZN			
37	B01300746	DISTANZIALE 12,5X21,3X15	SPACER			
38	B07S01203	ATTACCO ATTUATORE	ACTUATOR ATTACHMENT	ATTELAGE ACTIONNEUR	E-MOTOR HALTERUNG	
39	F01040201	VITE M12X1,75X 35 8.8 U5931 Z	SCREW M12X1,75X 35 8.8 U5931 Z			
40	B07V00092	PROT. MOLLE COLT.	KNIFE SPRING PROTECTION	PROTECTION RESSORTS COUTEAUX	MESSERFEDERSCHUTZ	
41	F01020436	VITE M8X1,25X20 U5739 8.8ZN	SCR. M8X1,25X20 U5739 8.8ZN	VIS M8X1,25X 20 U5739 8.8 ZN	SCHRAUBE M8X1,25X20U5739 8.8ZN	TORN. M8X1,25X20 U5739 8.8 ZN
42	F01420049	ROS.M8 8,4X 32X 2 U6593 ZN	WASHER M8 8,4X32X2 U6593 ZN	RONDELLA M8 8,4X32X2 U6593 ZN	SCHEIBE M8 8,4X32X2 U6593 ZN	ARANDELA M8 8,4X32X2 U6593 ZN
43	B00920208	DADO M8X1 D985 8ZN	NUT M8X1 D985 8ZN	ECROU	SELBSTSICHERNDE MUTTER M8-5S	
44	B07S01801	TRAVERSA TOPCUT NEW	CROSS BAR	TRAVERSE TOPCUT NEW	QUERTRAEGER	
45	B0C005018	ASTA DI SOSTEGNO	SUPPORT ROD	BARRE DE SUPPORT	STUETZSTANGE	
46	B00181030	VITE M10X1,5 X 30 U5739 8.8ZN	SCREW	VIS	SCHRAUBE	
47	F01410062	ROS.M10 10,5X 18X 2 U6592 ZN	WASHER M10 10,5X 18X 2 U6592	RONDELLE M10 10,5X18X2 ZN	DICHTUNGSRING M10 10,5X18X2 ZN	RONDANA M10 10,5X18X2 ZN
48	B0C003616	SPES. TRAVERSA RASCHIATORI	SCRAPER CROSS MEMBER SHIM	EPAISSEUR TRAVERSE RACLEUR	ABSTREIFER TRAEGER DISTANZSCHE	
49	F01020508	VITE M12X1,75X 25 U5739 8.8ZN	SCREW	VIS	SCHRAUBE	
50	B01515797	RALLA 13 25 5	FIFTH WHEEL	BUTEE	SCHEIBE	
51	B0C6P0263	RASCHIATORE	DETACHABLE SCRAPER	RACLEUR DEMONTABLE	DEMONTIERBARER ABSTREIFER	
52	B07SP0241	RASCHIATORE E PATTINO	SCRAPER AND SLIDING BLOCK	RACLEUR ET PATIN	ABSTREIFER UND GLEITSCHUH	
53	B0C005268G	CARTER CUT	CUT GUARD			
54	F01020436	VITE M8X1,25X20 U5739 8.8ZN	SCR. M8X1,25X20 U5739 8.8ZN	VIS M8X1,25X 20 U5739 8.8 ZN	SCHRAUBE M8X1,25X20U5739 8.8ZN	TORN. M8X1,25X20 U5739 8.8 ZN
55	F01410051	ROS.M8 8,4X 17X1,6 U6592 ZN	WASHER M8 8,4X17X1,6 U6592 ZN	RONDELLE	SCHEIBE	
56	B0C004239	PROLUNGA CARTER CUT	CUT GUARD EXTENSION	RALLONGE CARTER CUT	VERLAENGERUNG CARTER CUT	
57	F02250111	RIVETTO STR. 4X 6 U9200A AL	RIVET	RIVET	ABREISSNIETEN 4X8	

TAV_090

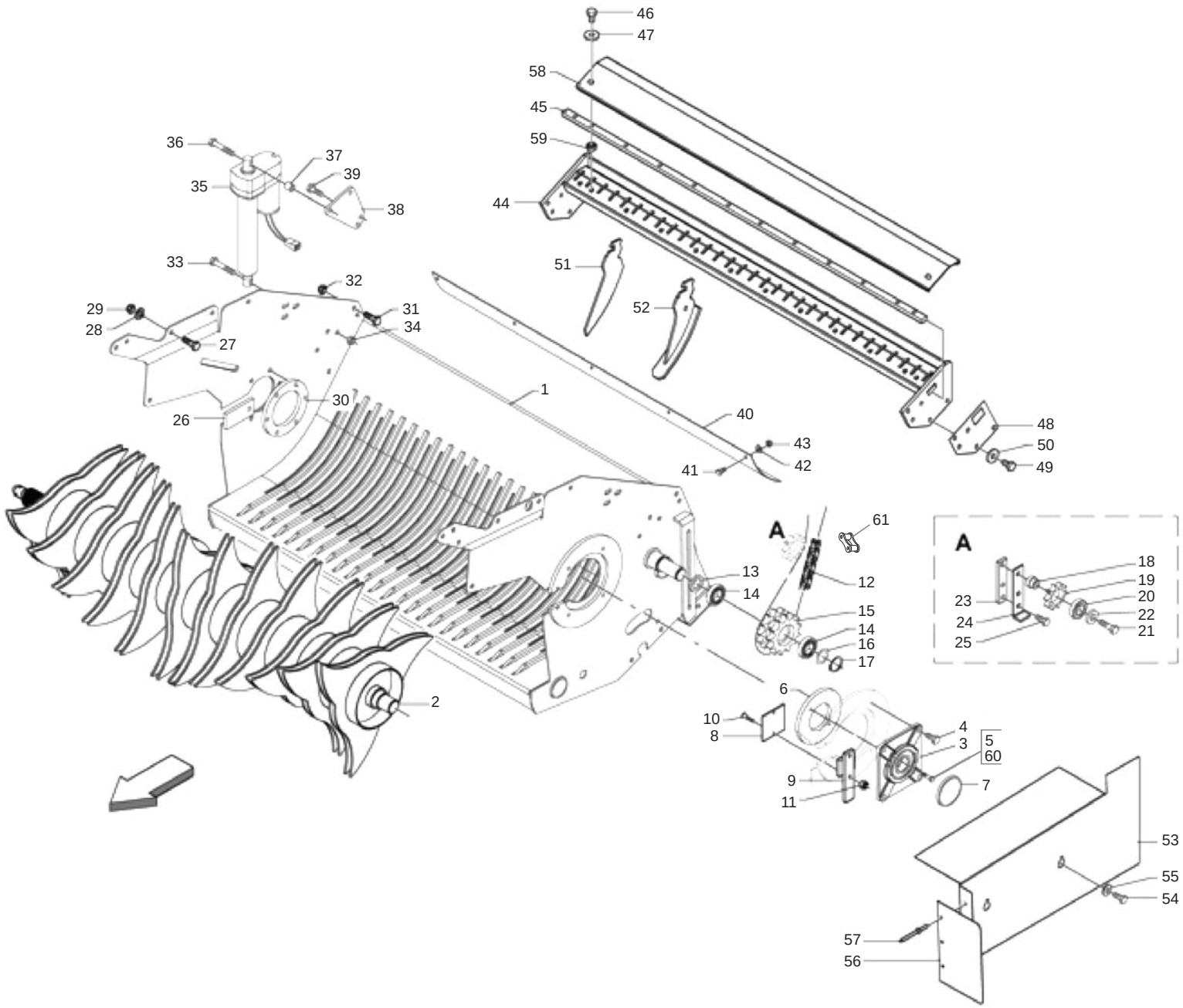

MASCHIO

cod. B0D5P0108

CUT 13: TELAIO + ROTORE
CUT 13: FRAME + ROTOR

Pos.	Cod.	Descrizione	Description	Description	Benennung	Descripcion
58	B0C3P0153	PROTEZIONI RASCHIATORI	PROTECTION	PROTECTION	SCHEUTZ ABSTERIFER	
59	B013C0126	DISTANZIALE	SPACER	ENTRETOISE	DISTANZSTUECK	
60	F01410051	ROS.M8 8,4X 17X1,6 U6592 ZN	WASHER M8 8,4X17X1,6 U6592 ZN	RONDELLE	SCHEIBE	
61	B030E1039	CATENA RULLI ISO 16 B-1 39M	ROLLER CHAIN ISO16 B-1 39M	CHAINE ROULEAUX	WALZENKETTE ISO 16 B-1 39M	

TAV_100

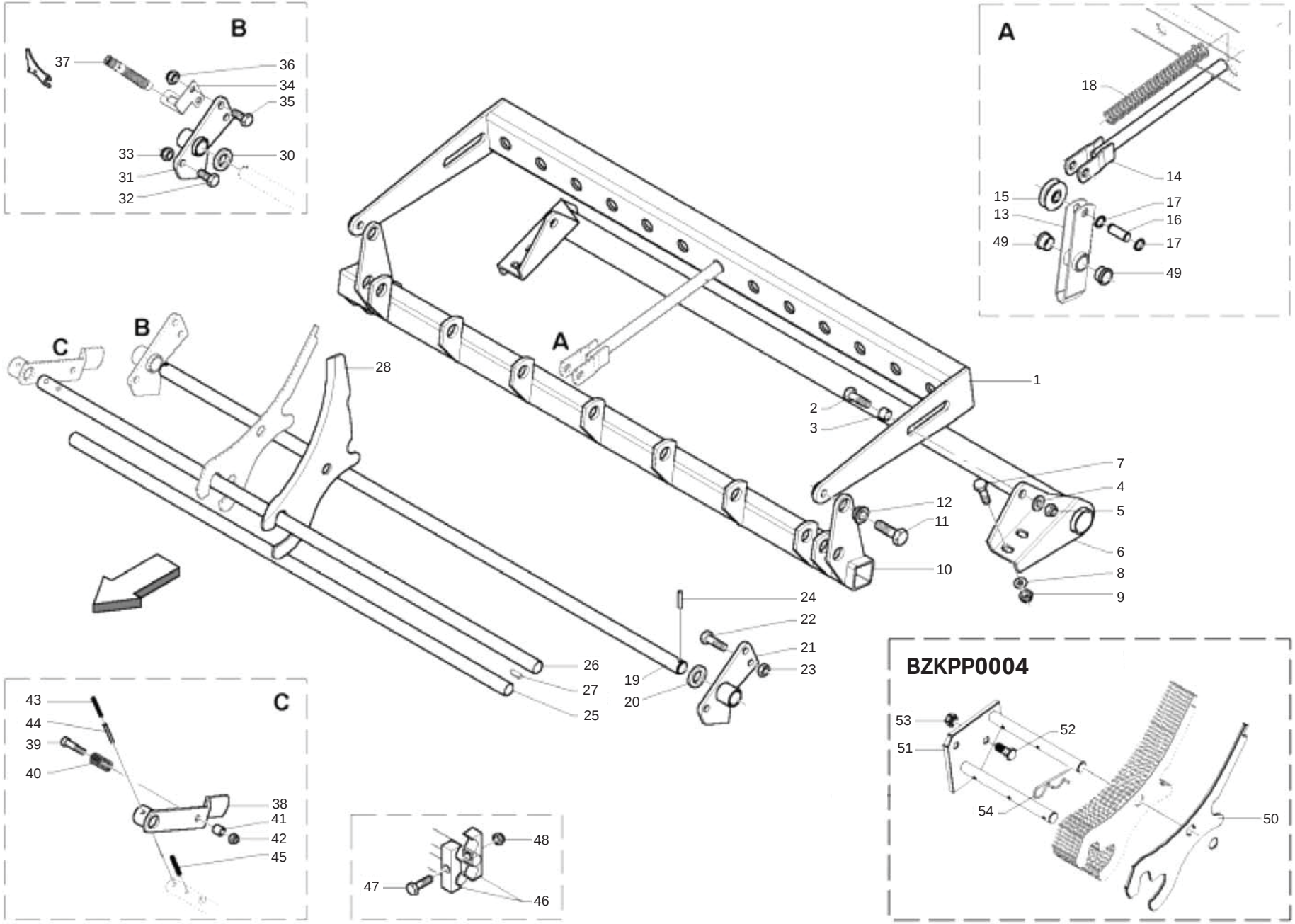

MASCHIO

cod. B0D5P0108

CUT 13: TRAVERSA COLTELLI
CUT 13: KNIVES CROSSBAR

TAV_100

Pos.	Cod.	Descrizione	Description	Description	Benennung	Descripcion
1	B07S01802	CONTRASTO MOLLE TOPCUT	KNIFE RESISTANCE TOPCUT	RESISTENCE DENTS TOPCUT	MESSERWIDERSTAND TOPCUT	
2	F01020568	VITE M16X2X45 U5739 8.8ZN	SCR. M16X2X45 U5739 8.8ZN	VIS M 16X 2X45 U5739 8.8 ZG	SCHRAUBE M 16X 2X45 U5739 8.8	TORNILLO M16X 2X45 U5739 8.8
3	B01300745	DISTANZIALE 16X20X14	SPACER	ENTRETOISE	DISTANZSTUECK 16X20X14	
4	F01410100	ROS.M16 17X 30X 3 U6592 ZN	WASHER	RONDELLE	SCHEIBE	
5	B00920516	DADO M16X 1,5 D985 6S ZN	NUT M16X1,5 D985 6S ZN	ECROU	SELBSTSICHERNDE MUTTER M16-5S	
6	B07S01636	COLLEGAMENTO INFERIORE NEW	LOWER CONNECTION	CONNECTION INFERIEURE	UNTERE VERBINDUNG	
7	F01020508	VITE M12X1,75X 25 U5739 8.8ZN	SCREW	VIS	SCHRAUBE	
8	F01410076	ROS.M12 13X 20X2,0 U1749 ZN	WASHER	RONDELLE	SCHEIBE	
9	B00920412	DADO M12X1,75 D985 8 ZN	NUT	ECROU	SELBSTSICHERNDE MUTTER M12-5S	
10	B07S01803	COM. COLT. TOPCUT	KNIFE CONTROL TOPCUT	COMMANDE COUTEAUX TOPCUT	MESSERBETAETIGUNG TOPCUT	
11	F01020562	VITE M16X2X30 U5739 8.8ZN	SCR. M16X2X30 U5739 8.8ZN	VIS M16X2X30 U5739 8.8 ZN	SCHRAUBE M16X2X30 U5739 8.8 ZN	TORNILLO M16X2X30 U5739 8.8 ZN
12	B01300706	BUSSOLA DI GUIDA	GUIDE BUSH	DOUILLE DE GUIDE	FUHRUNGSBUCHSE	
13	B07SP0024	BILANCINO TOPCUT	TOPCUT ROCKER ARM	PALONNIER TOPCUT	SCHWINGE TOPCUT	
14	B07S01125	SOSTEGNO MOLLE	SPRING BRAKET	SUPPORT RESSORTS	FEDERHALTERUNG	
15	B03800014	ROTELLA GUIDA COLTELLI	KNIVES GUIDE PULLEY	GALET GUIDE COUTEAUX	MESSER FUHRUNGSROLLE	
16	B01300694	PERNO CARRUCOLA COLTELLO	KNIFE ROLLER PIN	TOURILLON POULIE COUTEAU	MESSERFUHRUNGSROLLENBOLZEN	
17	B01700016	ANEL. D ARR. ALB. 16-E UNI3653	SEEGER RING	BAGUE SEEGER	SEEGERING	
18	B01800049	MOLLA TRAVERSA COLTELLI	SPRING KNIV.CONTROL 5 30 293C	RESSORT	FEDER	
19	B03500034	PERNO FULCRO	PIVOT	TOURILLON	DREHZAPFEN	
20	B01300036	RALLA 25,5X40 X 4	FIFTH WHEEL	BUTEE	LAGERSCHALE 25,5X40X4	
21	B07S01145	FULCRO SX LEVERISMI	LEFT LINKAGE FULCRUM	POINT D APPUI GAUCHE LEVIERS	LINKER HEBELWERKSCHWENKPUNKT	
22	F01020510	VITE M12X1,75X30 U5739 8.8ZN	SCR. M12X1,75X30 U5739 8.8ZN	VIS M12X1,75X30 U5739 8.8ZN	SCHRAU.M12X1,75X30 U5739 8.8ZN	TORN. M12X1,75X30 U5739 8.8ZN
23	B00920412	DADO M12X1,75 D985 8 ZN	NUT	ECROU	SELBSTSICHERNDE MUTTER M12-5S	
24	B01110635	SPINA ELAST. 6X 35 SS DIN 1481	PIN	GOUPILLE	STIFT	
25	B035P0016	ASTA NEW	NEW ROD	TIGE NEW	STAB NEW	
26	B035P0015	FULCRO COLT. NEW	NEW KNIVES FULCRUM	POINT D APPUI COUTEAUX NEW	FULCRUM MESSER NEW	
27	F02150064	LINGUETTA 8X 7X 25 U6604A	PARALLEL KEY 8X 7X 25 U6604A	CLAVETTE 8X7X25	FEDER 8X7X25 UNI 6604	LLAVE 8X7X25
28	B07U00035	COLTELLO ULTRACUT	TOPCUT KNIFE	COUTEAU CUT	SPEZIAL TOPCUT KLINGE	
30	B01300036	RALLA 25,5X40 X 4	FIFTH WHEEL	BUTEE	LAGERSCHALE 25,5X40X4	
31	B07S01144	FULCRO DX LEVERISMI	RIGHT LINKAGE FULCRUM	POINT D APPUI DROIT LEVIERS	RECHTER HEBELWERKSCHWENKPUNKT	
32	F01020510	VITE M12X1,75X30 U5739 8.8ZN	SCR. M12X1,75X30 U5739 8.8ZN	VIS M12X1,75X30 U5739 8.8ZN	SCHRAU.M12X1,75X30 U5739 8.8ZN	TORN. M12X1,75X30 U5739 8.8ZN
33	B00920412	DADO M12X1,75 D985 8 ZN	NUT	ECROU	SELBSTSICHERNDE MUTTER M12-5S	
34	B0C004233	SOSTEGNO PROSIMITI CUT	CUT SENSOR SUPPORT	SUPPORT SENSEUR CUT	CUT SENSORHALTERUNG	
35	F01020512	VITE M12X1,75X35 U5739 8.8ZN	SCR. M12X1,75X35 U5739 8.8ZN	VIS M12X1,75X35 5739 8.8 ZN	SCHR. M12X1,75X35 5739 8.8 ZN	TORN. M12X1,75X35 5739 8.8 ZN
36	B00920412	DADO M12X1,75 D985 8 ZN	NUT	ECROU	SELBSTSICHERNDE MUTTER M12-5S	
37	B0E000056	SENSORE PROSSIMITA BALLA M12	PROXIMITY SENSOR	CAPTEUR DE PROXIMITE	ABSTANDSMELDER	
38	B07S01159	MANIGLIA DI SICUREZZA	SAFETY HANDLE	POULIE DE SURETE	SICHERUNGSHEBEL	
39	F01040130	VITE M10X1,5X60 U5931 8.8ZN	SCR. M10X1,5X60 U5931 8.8ZN			
40	B01821993	MOLLA	SPRING	RESSORT	FEDER	
41	B01300401	BUSSOLA FILETTATA	PIN WITHOUT NET	DOUILLE FILETEE	NETZAUFNAHMEZANGENBOLZEN	
42	F01230202	DADO M10X1,25 D985 8 ZN	SELF-LOCKING NUT	ECROU NYLSTOP	SELBSTSICHERNDE MUTTER M10-5S	
43	F02100142	SPINA E.P. 8X 40 U6873 C70 BR	ELASTIC PIN 8X40	GOUJON ELASTIQUE 8X40	SPANNHUELSE 8X40	ESPINA ELASTICA 8X40
44	F02100090	SPINA E.P. 5X 40 U6873 C70 BR	ELASTIC PIN 5X40	GOUJON ELASTIQUE 5X40	SPANNHUELSE 5X40	ESPINA ELASTICA 5X40
45	F02100142	SPINA E.P. 8X 40 U6873 C70 BR	ELASTIC PIN 8X40	GOUJON ELASTIQUE 8X40	SPANNHUELSE 8X40	ESPINA ELASTICA 8X40
46	B027P0001	SEMIBIELLA DI TRASMISSIONE	DRIVE HALF ROD	DEMI BIELLE DE TRANSMISSION	HALB-KOLBENSTANGE	
47	F01020164	VITE M12X1,75X70 U5737 8.8ZN	SCREW M12X1,75X70 U5737 8.8ZN	VIS M12X1,75X70 U5737 8.8 ZN	SCHR. M12X1,75X70 U5737 8.8 ZN	TORN. M12X1,75X70 U5737 8.8 ZN
48	B00920412	DADO M12X1,75 D985 8 ZN	NUT	ECROU	SELBSTSICHERNDE MUTTER M12-5S	
49	B025P0003	BUSSOLA NYLON	NYLON BUSH	DOUILLE EN NYLON	BUCHSE	
50	B0C005006	FINTO COLT. CUT	BLANK KNIFE CUT	FAUX COUTEAU CUT	BLINDMESSER CUT	
51	B07S01896	PORTA COLT. NEW	NEW KNIVES HOLDER	PORTE-COUTEAUX NEW		
52	F01020510	VITE M12X1,75X30 U5739 8.8ZN	SCR. M12X1,75X30 U5739 8.8ZN	VIS M12X1,75X30 U5739 8.8ZN	SCHRAU.M12X1,75X30 U5739 8.8ZN	TORN. M12X1,75X30 U5739 8.8ZN
53	B00920412	DADO M12X1,75 D985 8 ZN	NUT	ECROU	SELBSTSICHERNDE MUTTER M12-5S	
54	B01170484	SPINA MOLLA 4 OCCH.SEMPL.ZINC.	PIN	GOUPILLE CLIPS	STIFT	

TAV_110

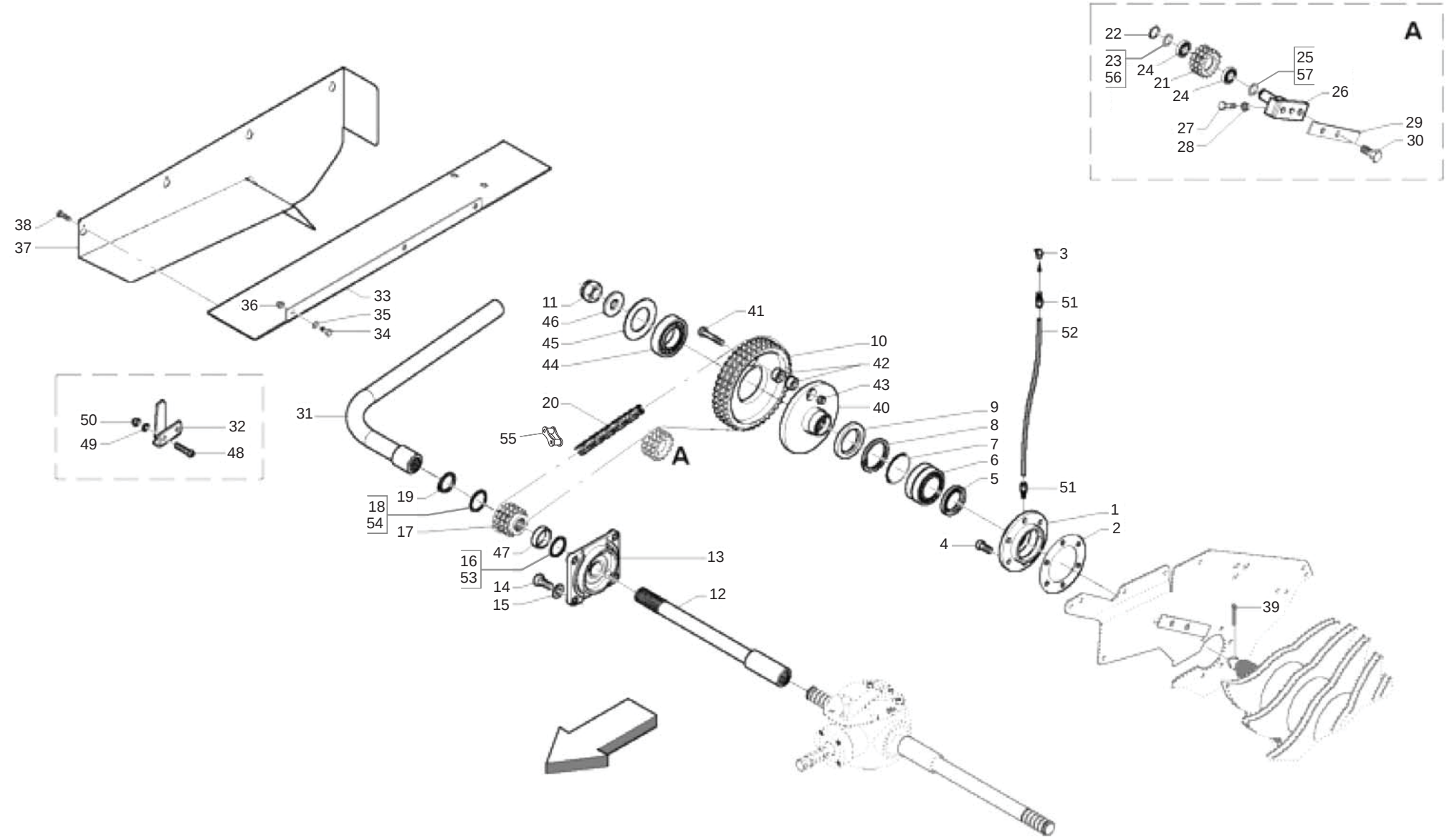
A
22
23
56
24
21
24
25
57
26
27
28
29
30
38
37
36
33
35
34
11
46
45
44
41
10
42
43
40
9
8
7
6
5
3
51
52
51
1
2
4
39
50
49
32
48
31
20
55
A
19
18
54
17
47
16
53
14
15
13
12

SICUREZZA TRASMISSIONE MECCANICA CON BULLONE
TRANSMISSION SAFETY DEVICE MECHANICAL WITH BOLT

TAV_110

Pos.	Cod.	Descrizione	Description	Description	Benennung	Descripcion
1	B02700052	SUPP. COM. ROT.	CONTROL ROTOR SUPPORT	SUPPORT CONTROLE ROTOR	LAGER DES ROTORSANTRIEBS	
2	B01300960	SPESSORE SUPPORTO ROTORE	ROTOR SUPPORT SPACING	ENTRETOISE SUPPORT ROTOR	DISTANZSTUCK FUR ROTORLAGER	
3	B04200610	INGRASS.A SFERE M6X1 LUNGO	GREASE NIPPLE	GRAISSEUR HYDRAULIQUE	GERADER SCHMIERNIPPEL M6X1	
4	F01040140	VITE M12X1,75X 40 U5931 8.8ZN	SCREW M12X1,75X 40 U5931 8.8Z			
5	B04304966	ANELLO TENUTA 55X 85X10 NORM	SEAL	BAGUE	DICHTUNG 55X85X10	
6	B02335023	CUSC. 22210 CAT.B-ST004	BEARING	ROULEMENT	LAGER 22210	
7	B01534318	SPES. 80 90 0,2	SHIM	ENTRETOISE	DISTANZSTUECK 80 90 0,2	
8	B01710090	ANEL. D ARR. FORO 90-I UNI3654	SEEGER RING	BAGUE SEEGER	SEEGERRING 90-I	
9	B04305668	ANELLO TENUTA 65X 90X10 NORM	SEAL	BAGUE	DICHTUNG 65X90X10	
10	B03400070	INGR. TRIP Z42 - 3 4 X 7 16	TRIPLE GEAR Z=42-3 4 X7 16	ENGRENAGE TRIPLE	DREIFACH ZAHNRAD Z=42 -3 4 X	
11	B00851530	DADO M30X 2 U5588 6S ZN	NUT	ECROU	KRONENMUTTER M30X2-6S	
12	B0R000304	ALBERO PROLUNGA L=602	EXTENSION SHAFT L=602	ARBRE RALLONGE L=602	VERLAENGERUNGSWELLE L=602	
13	B02700051	SUPPORTO FLANGIATO	FLANGED SUPPORT	SUPPORT EMBOUTI	FLANSCHLAGER	
14	F01020512	VITE M12X1,75X35 U5739 8.8ZN	SCR. M12X1,75X35 U5739 8.8ZN	VIS M12X1,75X35 5739 8.8 ZN	SCHR. M12X1,75X35 5739 8.8 ZN	TORN. M12X1,75X35 5739 8.8 ZN
15	F01410076	ROS.M12 13X 20X2,0 U1749 ZN	WASHER	RONDELLE	SCHEIBE	
16	B01300151	SPES. 40 48 2 ZINCATO	SHIM	ENTRETOISE	DISTANZSTUECK 40 48 2	
17	B03400072	INGR.TRIPLO Z=13-3 4 X7 16	TRIPLE GEAR Z=13-3 4 X7 16	ENGRENAGE TRIPLE	DREIFACH ZAHNRAD Z=13-3 4 X7 1	
18	B01300151	SPES. 40 48 2 ZINCATO	SHIM	ENTRETOISE	DISTANZSTUECK 40 48 2	
19	B01700040	ANEL. D ARR. ALBERO 40-E UNI 3	SEEGER RING	BAGUE SEEGER	SEEGERRING 40-E	
20	B030F1117	CATENA RULLI ISO 12 B - 3 117M	ROLLER CHAIN ISO12 B-3 117M	CHAINE ROULEAUX	WALZENKETTE ISO 12 B	
21	B03400073	INGR.TRIPLO Z=13-3 4 X7 16	TRIPLE GEAR Z=13-3 4 X7 16	ENGRENAGE TRIPLE	DREIFACH-ZAHNRAD Z=13-3 4 X7	
22	F02050101	ANEL. D ARR. ALB. 25-E UNI3653	SEEGER RING	BAGUE SEEGER	SEEGERRING 25-E	
23	B01300105	SPES. 25,5 37 0,5	SHIM	ENTRETOISE	DISTANZSTUECK 25,5 37 0,5	
24	B02042512	CUSC 6005-2RS CAT.B-ST004	BEARING	ROULEMENT	LAGER	
25	B01300106	SPES. 25,5 37 1 ZINCATO	SHIM GALV	ENTRETOISE GALV	DISTANZSTUECK 25,5 37 1	
26	B07S00848	PERNO TENDITORE	TENSIONER PIN	TOURILLON TENDEUR	SPANNBOLZEN	
27	F01020522	VITE M12X1,75X80 U5739 8.8ZN	SCR. M12X1,75X80 U5739 8.8ZN	VIS M12X1,75X80 U5739 8.8ZN	SCHRA.M12X1,75X80 U5739 8.8ZN	TORN.M12X1,75X80 U5739 8.8ZN
28	F01200293	DADO M12X1,75 U5588 CL8 ZN	NUT M12X1,75 U5588 6S ZN	ECROU M12X1,75 U5588 6S ZN	MUTTER M12X1,75 U5588 6S ZN	TUERCA M12X1,75 U5588 6S ZN
29	B0C002732	RINFORZO	REINFORCEMENT	RENFORT	VERSTAERKUNG	
30	F01020564	VITE M16X2X35 U5739 8.8ZN	SCR. M16X2X35 U5739 8.8ZN	VIS M 16X35	SCHRAUBE M 16X35	TORNILLO M 16X35
31	B07S01804	MANIGLIA SGOLFAMENTO CUT	HANDLE	POIGNEE DEBOURRAGE CUT	KURBEL	
32	B0C005030	SOSTEGNO MANIGLIA	HANDLE SUPPORT	SUPPORT POIGN E	GRIFFHALTERUNG	
33	B0C002663	ATTACCO CARTER CUT	COVER PLATE ATTACHMENT	ATTELAGE CARTER CUT	ABECKBLECHHALTERUNG	
34	F01020508	VITE M12X1,75X 25 U5739 8.8ZN	SCREW	VIS	SCHRAUBE	
35	F01410076	ROS.M12 13X 20X2,0 U1749 ZN	WASHER	RONDELLE	SCHEIBE	
36	B00920412	DADO M12X1,75 D985 8 ZN	NUT	ECROU	SELBSTSICHERNDE MUTTER M12-5S	
37	B07S01212	CARTER TRASMISSIONE ROT.	ROTOR TRANSMISSION COVER	CARTER TRANSMISSION ROTOR	ROTORANTRIEBABDECKBLECH	
38	F01020432	VITE M8X1,25X16 U5739 8.8ZN	SCR. M8X1,25X16 U5739 8.8ZN	VIS M8 X1,25X16 U5739 8.8 ZN	SCHRAUBE M8X1,25X16U5739 8.8ZN	TORNILLO M8X1,25X16U5739 8.8ZN
39	B01150560	COPIGLIA 5X 70 U1336 ZN	GALV PIN	GOUPILLE GALV	SPLINT	
40	B02700079	SICUREZZA ROT.	ROTOR SAFETY	SURETE ROTEUR	SCHERBOLZEN	
41	F01020203	VITE M14X2X60 U5737 8.8ZN	SCR. M14X2X60 U5737 8.8ZN	VIS M 14X60	SCHRAUBE M 14X60	TORNILLO M 14X60
42	B01300702	BUSSOLA D=35 D=14.5 L=18.5	BUSH D=35 D=14.5 L=18.5	DOUILLE	BUCHSE	
43	B00920514	DADO M14X 2 D985 8 ZN	NUT	ECROU	SELBSTSICHERNDE MUTTER M14-5S	
44	B02047020	CUSC. 6014-2RS CAT.B-ST004	BEARING	ROULEMENT	LAGER 6014-2RS	
45	B01300824	FLANGIA	FLANGE	FLASQUE	FLANSCH	
46	B01300823	RALLA 30,5X92X8	FITH WHEEL	BUTEE	SCHEIBE 30,5X92X8	
47	B01300355	DISTANZIALE 40X54X20	SPACER	ENTRETOISE	ABSTANDSTUECK 40X54X20	
48	B00471280	VITE TTEI M12X 80-10.9 UNBRAKO	SCREW	VIS	SCHRAUBE TTEI M12X 80-8.8	
49	F01410076	ROS.M12 13X 20X2,0 U1749 ZN	WASHER	RONDELLE	SCHEIBE	
50	B00920412	DADO M12X1,75 D985 8 ZN	NUT	ECROU	SELBSTSICHERNDE MUTTER M12-5S	
51	B0H000259	RACCORDO M6X1 COMPLETO	FITTING OUT M6X1	RACCORD	KUPPLUNG M6X1	
52	B0H0P0029	TUBETTO NYLON 4 L 180	NYLON HOSE	TUYAU EN NYLON	KLEINS ROHR AUS NYLON	
53	B01300150	SPES. 40 48 1,5 ZINCATO	SHIM GALV	ENTRETOISE GALV	DISTANZSTUECK 40 48 1,5	
54	B01300150	SPES. 40 48 1,5 ZINCATO	SHIM GALV	ENTRETOISE GALV	DISTANZSTUECK 40 48 1,5	
55	B030F0017	GIUNTO MOLL.N. 26 ISO 12 B - 3	SPRING JOINT N.26 ISO 12 B-3	JOINT RESSORT	KUPPLUNGSSTUCK N. 26 ISO	
56	B01300106	SPES. 25,5 37 1 ZINCATO	SHIM GALV	ENTRETOISE GALV	DISTANZSTUECK 25,5 37 1	
57	B01300105	SPES. 25,5 37 0,5	SHIM	ENTRETOISE	DISTANZSTUECK 25,5 37 0,5	

TAV_119

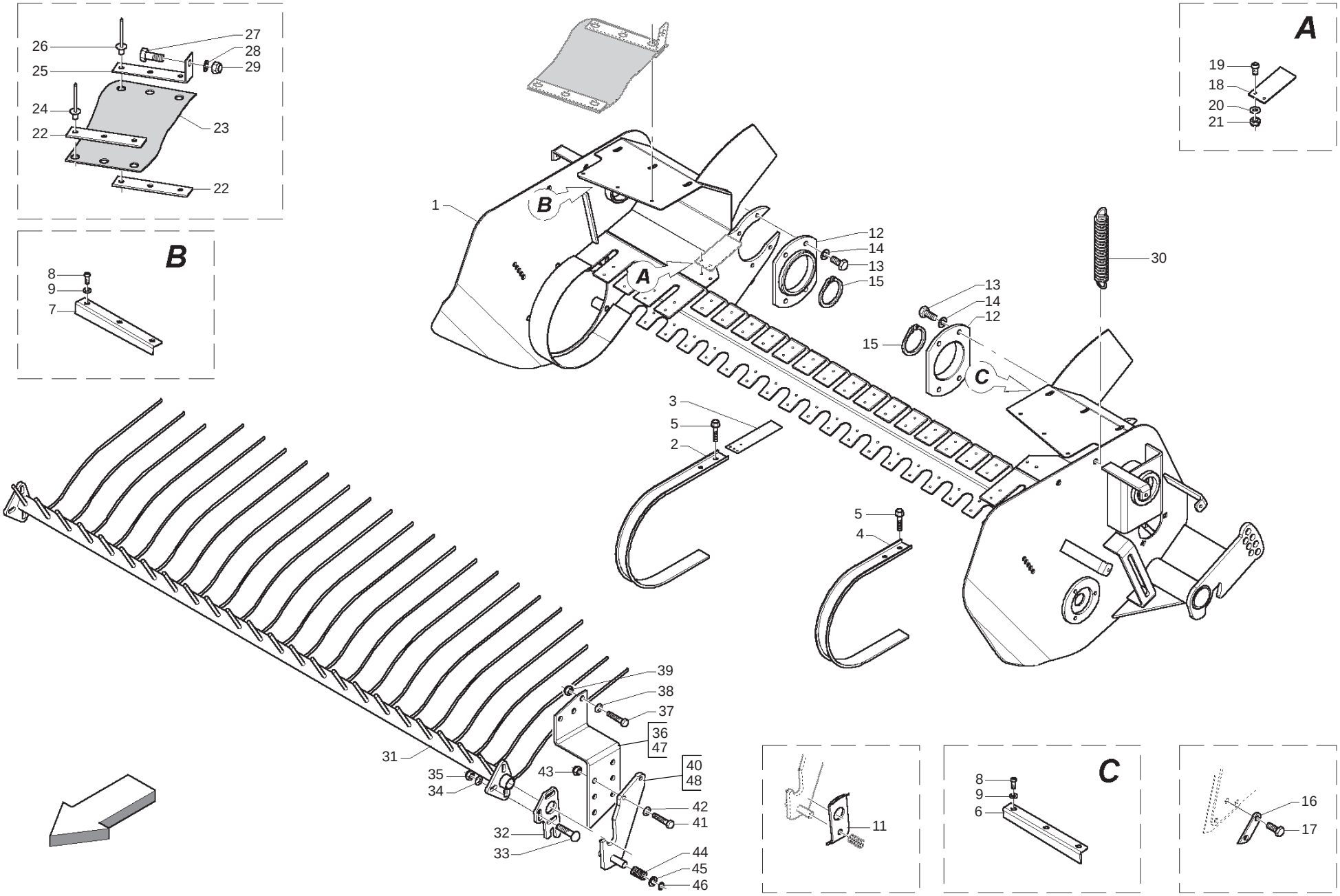

MASCHIO

cod. B0D5P0108

PICK-UP M
PICK-UP M

TAV_119

Pos.	Cod.	Descrizione	Description	Description	Benennung	Descripcion
1	B07SP0219	TELAIO PU M LT	FRAME PU M LT	CHASSIS PU LT	RAHMEN PU M LT	
2	B0C003304	FASCIA CENTRALE PICK UP TOPCUT	PICK-UP CENTRAL BAND TOPCUT	BANDE CENTRALE PICK-UP TOPCUT	ZENTRALES PICK-UP BAND	
3	B0C002069	COMPENSO FASCIA	BAND EXTENSION	EPAISSEUR BANDE	BANDVERLAENGERUNG	
4	B0C003183	FASCIA LATERALE PICK-UP	LATERAL BAND PICK-UP	BANDE LATERALE	SEITENBAND	
5	B00370615	VITE M 6X16 ZN SEZ.TRIL. U8111	SCREW	VIS	SCHRAUBE	
6	B0C3P0015	DEVIATORE SX COCLEA	AUGER LEFT SWITCH	COMMUTATEUR GAUCHE VIS	SCHALTER LINKS	
7	B0C3P0014	DEVIATORE DX COCLEA	RIGHT AUGER SEPARATOR	COMMUTATEUR DROIT VIS	SCHALTER RECHTS	
8	F01030208	VITE TTEI M 8X 20-10,9 UMBRAKO	SCREW	VIS	SCHRAUBE TTEI M 8X 20-10.9	
9	F01420048	ROS.M8 8,4X 24X 2 U6593 ZN	WASHER	RONDELLE	SCHEIBE	
11	B0C000058	AGGANCIO RASTRELLO	RAKE LINKAGE	ATTELAGE GRILLE RABATTEUR	NIEDERHALTERRECHENANSCHLUSS	
12	B01300715	FLANGIA SX PICK-UP	PICK-UP FLANGE	FLASQUE GAUCHE POUR PICK-UP	PICK-UP FLANSCH	
13	B00181015	VITE M10X1,5 X 16 U5739 8.8ZN	SCREW	VIS	SCHRAUBE	
14	F01410062	ROS.M10 10,5X 18X 2 U6592 ZN	WASHER M10 10,5X 18X 2 U6592	RONDELLE M10 10,5X18X2 ZN	DICHTUNGSRING M10 10,5X18X2 ZN	RONDANA M10 10,5X18X2 ZN
15	B01700095	ANEL. D ARR. ALB. 95-E UNI3653	SEEGER RING	BAGUE SEEGER	SEEGERRING 95-E	
16	B0C6P0039	FERMO PICK-UP NORMALE	STANDARD PICK-UP LOCK	ARRET PICK-UP NORMAL		
17	F01020512	VITE M12X1,75X35 U5739 8.8ZN	SCR. M12X1,75X35 U5739 8.8ZN	VIS M12X1,75X35 5739 8.8 ZN	SCHR. M12X1,75X35 5739 8.8 ZN	TORN. M12X1,75X35 5739 8.8 ZN
18	B0C004894	COMPENSO PER PU NORMALE	PICK-UP SHIM	EPAISSEUR POUR PU NORMAL	PICK-UP AUSGLEICHSTUECK	
19	B00470620	VITE TTEI M 6X 20-8.8 UNBRA	SCREW	VIS	SCHRAUBE TTEI M6X20-10.9	
20	F01410037	ROS.M6 6,4X12,5X1,6 U6592 ZN	WASHER	RONDELLE	BEILAGSCHEIBE 6	
21	B00920106	DADO M6X1 D985 8ZN	NUT	ECROU	SELBSTSICHERNDE MUTTER M6-5S	
22	B0C002410	PIATTO FISSAGGIO GOMMA PUL	FIXING PLATE	PLAT FIXAGE	GUMMIFIXIERPLATTE	
23	B07V00074	PROT. COCLEA PU 180	AUGER PROTECTION	PROTECTION PELLETEUSE PU 180	SCHNECKENSCHUTZ	
24	B01000013	RIVETTO STR. 5X18 U9200A AL	RIVET	RIVET	ABREISSNIETEN 6X18	
25	B0C002409	SOSTEGNO GOMMA PUL	RUBBER SUPPORT	SUPPORT PNEUS	GUMMIHALTER	
26	B01000012	RIVETTO STR. 6,4X22 ACCIAIO	RIVET	RIVET	ABREISSNIETEN 6X26	
27	F01020472	VITE M10X1,5X25 U5739 8.8ZN	SCR. M10X1,5X25 U5739 8.8ZN	VIS M10X1,5X25 U5739 8.8 ZN	SCHRAUBE M10X1,5X25 U5739 8.8	TORNILLO 10X25 U5739 8.8 ZN
28	F01410062	ROS.M10 10,5X 18X 2 U6592 ZN	WASHER M10 10,5X 18X 2 U6592	RONDELLE M10 10,5X18X2 ZN	DICHTUNGSRING M10 10,5X18X2 ZN	RONDANA M10 10,5X18X2 ZN
29	F01230202	DADO M10X1,25 D985 8 ZN	SELF-LOCKING NUT	ECROU NYLSTOP	SELBSTSICHERNDE MUTTER M10-5S	
30	B01810412	MOLLA	SPRING	RESSORT	FEDER	
31	B07SP0103	RASTRELLO PER PU M LT	RAKE FOR PU M LT	GRILLE RABATTEUR POUR MU M LT	RAKE FUER PU M LT	
32	B0C003179	AGGANCIO REGOLAZIONE	ADJUSTER ATTACHMENT	ACCROCHAGE REGLAGE	EINSTELLUNGSANKUPPLUNG	
33	B00523395	VITE SPECIALE TTQST M12X45-8.8	SPECIAL SCREW	VIS SPECIALE	SCHRAUBE TTQST M12X 45-8.8	
34	B01522469	RALLA 13 42 6	FIFTH WHEEL	BUTEE	SCHEIBE	
35	B00920412	DADO M12X1,75 D985 8 ZN	NUT	ECROU	SELBSTSICHERNDE MUTTER M12-5S	
36	B0C000056	ATTACCO SX RASTRELLO	LEFT RAKE ATTACHMENT	ATTELAGE GAUCHE GRILLE RABATTE	LINKE NIEDERHALTERRECHENHALTER	
37	F01020516	VITE M12X1,75X45 U5739 8.8ZN	SCR. M12X1,75X45 U5739 8.8ZN	VIS M12X1,75X45 U5739 8.8 ZN	SCHARAUBE M12X1,75X45 U5739 ZN	TORNIL.M12X1,75X45 U5739 8.8ZN
38	F01410076	ROS.M12 13X 20X2,0 U1749 ZN	WASHER	RONDELLE	SCHEIBE	
39	B00920412	DADO M12X1,75 D985 8 ZN	NUT	ECROU	SELBSTSICHERNDE MUTTER M12-5S	
40	BSP000025	ATTACCO SX RASTRELLO				
41	F01020512	VITE M12X1,75X35 U5739 8.8ZN	SCR. M12X1,75X35 U5739 8.8ZN	VIS M12X1,75X35 5739 8.8 ZN	SCHR. M12X1,75X35 5739 8.8 ZN	TORN. M12X1,75X35 5739 8.8 ZN
42	F01420120	ROS.M12 13X 36X2,5 U6593 ZN	WASHER	RONDELLE	SCHEIBE	
43	B00920412	DADO M12X1,75 D985 8 ZN	NUT	ECROU	SELBSTSICHERNDE MUTTER M12-5S	
44	B01817605	MOLLA C FILO 2,5 P24,5 L=60	SPRING	RESSORT	C-FEDER	
45	F01410124	ROS.M20 21X 37X 3 U6592 ZN	WASHER M20 21X 37X 3 U6592 ZN	RONDEL.M20 21X 37X 3 U6592 ZN	MUTTER M20 21X 37X 3 U6592 ZN	ARANDELA M20 21X37X3 U6592 ZN
46	B01700020	ANEL. D ARR. ALB. 20-E UNI3653	SEEGER RING	BAGUE SEEGER	SEEGERRING 20-E	
47	BSP000023	ATTACCO DX RASTRELLO				
48	BSP000024	ATTACCO DX RASTRELLO				

TAV_175

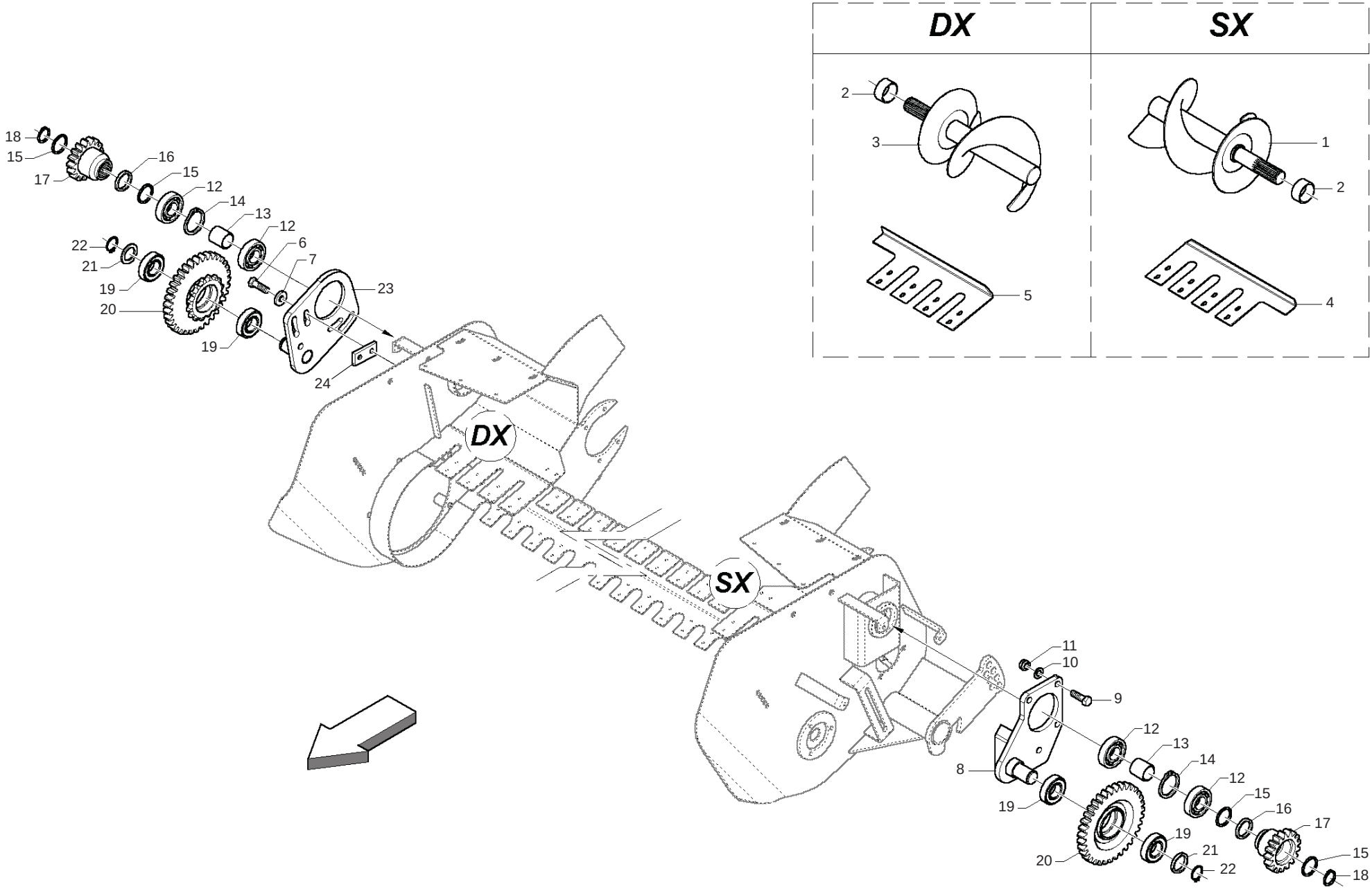
DX
SX
2
3
5
1
2
4
18
15
17
16
15
12
14
13
12
6
7
22
21
19
20
19
23
24
DX
SX
11
10
9
12
13
14
12
15
16
17
15
18
8
19
20
19
21
22

COCLEE PICK-UP M
AUGER PICH-UP M

TAV_175

Pos.	Cod.	Descrizione	Description	Description	Benennung	Descripcion
1	B07S01652	COCLEA SX PU 200	LEFT PICK-UP AUGER 200	VIS GAUCHE PU 200	LINKE PICK-UP ZUBRINGERSCHNECK	
2	B01300046	DISTANZIALE 35,2X42,4X15	SPACER	ENTRETOISE	DISTANZSTUECK 35,2X42,4X15	
3	B07S01651	COCLEA DX PU 200	RIGHT PICK-UP AUGER 200	VIS DROIT PU 200	RECHTE PICK-UP ZUBRINGERSCHNEC	
4	BC3P0101L	GUIDA COCLEA SX PU M LT	AUGER GUIDE RIGHT			
5	B0C3P0101	GUIDA COCLEA DX PU M LT	AUGER GUIDE	GUIDE PALLETEUSE	SCHNECKENFOERDERER FUEHRUNG RE	
6	F01020152	VITE M12X1,75X40 U5737 8.8ZN	SCR. M12X1,75X40 U5737 8.8ZN	VIS M12X1,75X40 U5737 8.8 ZN	SCHRAUBE M12X1,75X40U57378.8ZN	TORNIL.M12X1,75X40 U5737 8.8ZN
7	B01516038	RALLA 13 32 5	FIFTH WHEEL	BUTEE	SCHEIBE	
8	B07SP0238	PIASTRA SX	PLATE LINK SIDE	PLAQUE COTE GAUCHE	PLATTE LINKS	
9	F01020152	VITE M12X1,75X40 U5737 8.8ZN	SCR. M12X1,75X40 U5737 8.8ZN	VIS M12X1,75X40 U5737 8.8 ZN	SCHRAUBE M12X1,75X40U57378.8ZN	TORNIL.M12X1,75X40 U5737 8.8ZN
10	F01410076	ROS.M12 13X 20X2,0 U1749 ZN	WASHER	RONDELLE	SCHEIBE	
11	B00920412	DADO M12X1,75 D985 8 ZN	NUT	ECROU	SELBSTSICHERNDE MUTTER M12-5S	
12	F04010178	CUSCINETTO 6207-2RS CAT.AST004	BEARING	PALIER 6207-2RS	LAGER	
13	B01300739	DISTANZIALE 35X42X41	SPACER	ENTRETOISE	DISTANZSTUECK 35X42X41	
14	B01710072	ANEL. D ARR. FORO 72-I UNI3654	SEEGER RING	BAGUE SEEGER	SEEGERRING 72-I	
15	B01534416	SPES. 35 43 1 ZINCATO	SHIM	ENTRETOISE	AUSGLEICHSCHEIBE 35X43X1	
16	B013P0133	RALLA 35 45 5	FIFTH WHEEL 35 45 5	BUTEE 35 45 5	DISTANZSCHEIBE 35 45 5	
17	B034P0048	INGRANAGGIO Z=17 M=5	GEAR Z=17 M=5	ENGRANAGE Z=17 M=5	ZAHNRADPAAR Z=17 M=5	
18	B01700035	ANEL. D ARR. ALB. 35-E UNI3653	SEEGER RING	BAGUE SEEGER	SEEGERRING 35-E	
19	B02043016	CUSCINETTO PER TENDITORE	BEARING	ROULEMENT	LAGER	
20	B034P0049	INGR. Z=35 M=5 WITH SPROCKET Z	GEAR Z=35 M=5 WITH SPROCKET Z=	PINION Z=16 3 4 ET ENGRANAGE Z	RITZEL Z=16 3 4 UND ZAHNRADPAA	
21	B013P0130	RALLA 30 45 3	FIFTH WHEEL 30 45 3	BUTEE 30 45 3	DISTANZSCHEIBE 30 45 3	
22	F02050112	ANEL. D ARR. ALB. 30-E UNI3653	SEEGER RING	BAGUE SEEGER	SEEGERRING 30-E	
23	B07SP0239	PIASTRA DX	PLATE RIGHT SIDE	PLAQUE COTE DROIT	PLATTE RECHTS	
24	B0C003172	ATTACCO TENDICATENA	CHAIN TIGHTENER COUPLING	ATTELAGE TENDEUR DE CHAINE	KETTENSPANNER BEFESTIGUNG	

TAV_140

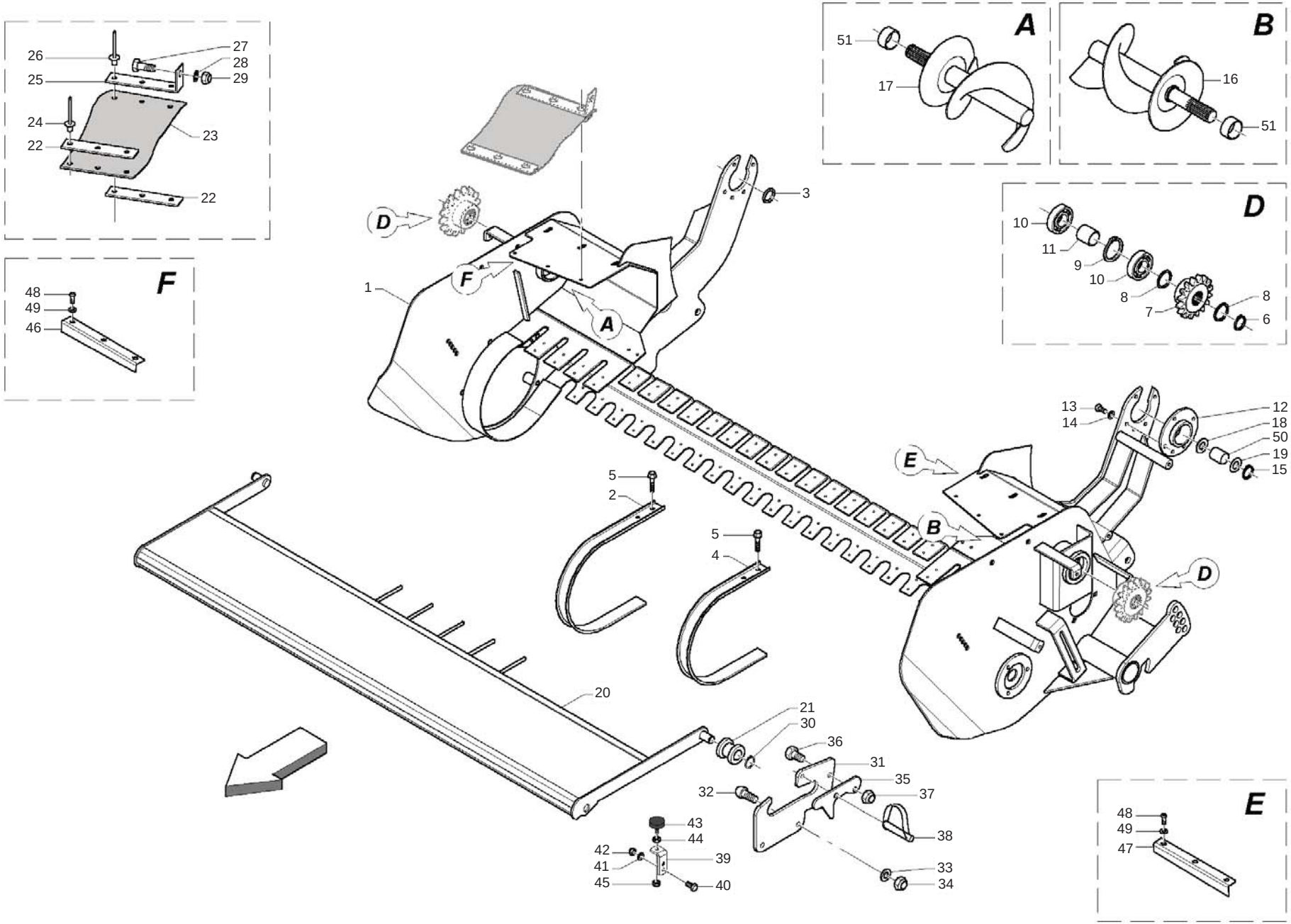

MASCHIO

cod. B0D5P0108

PICK-UP M CUT
PICK-UP M CUT

TAV_139

Pos.	Cod.	Descrizione	Description	Description	Benennung	Descripcion
1	B07SP0220	TELAIO PU M CUT LT	FRAME PU M CUT LT	CHASSIS PU CUT LT	RAHMEN PU M CUT LT	
2	B0C003304	FASCIA CENTRALE PICK UP TOPCUT	PICK-UP CENTRAL BAND TOPCUT	BANDE CENTRALE PICK-UP TOPCUT	ZENTRALES PICK-UP BAND	
3	B01300003	RALLA ATTACCO PU	WASHER ATTACK PICK-UP			
4	B0C003183	FASCIA LATERALE PICK-UP	LATERAL BAND PICK-UP	BANDE LATERALE	SEITENBAND	
5	B00370615	VITE M 6X16 ZN SEZ.TRIL. U8111	SCREW	VIS	SCHRAUBE	
6	B01700035	ANEL. D ARR. ALB. 35-E UNI3653	SEEGER RING	BAGUE SEEGER	SEEGERRING 35-E	
7	B034P0005	PIGNONE Z=13-3 4	PINION	PIGNON	RITZEL	
8	B01534416	SPES. 35 43 1 ZINCATO	SHIM	ENTRETOISE	AUSGLEICHSCHEIBE 35X43X1	
9	B01710072	ANEL. D ARR. FORO 72-I UNI3654	SEEGER RING	BAGUE SEEGER	SEEGERRING 72-I	
10	F04010178	CUSCINETTO 6207-2RS CAT.AST004	BEARING	PALIER 6207-2RS	LAGER	
11	B01300739	DISTANZIALE 35X42X41	SPACER	ENTRETOISE	DISTANZSTUECK 35X42X41	
12	B01300649	FLANGIA	FLANGE	FLASQUE	PICK-UP FLANSCH	
13	B00181015	VITE M10X1,5 X 16 U5739 8.8ZN	SCREW	VIS	SCHRAUBE	
14	F01410062	ROS.M10 10,5X 18X 2 U6592 ZN	WASHER M10 10,5X 18X 2 U6592	RONDELLE M10 10,5X18X2 ZN	DICHTUNGSRING M10 10,5X18X2 ZN	RONDANA M10 10,5X18X2 ZN
15	B01700045	ANEL. D ARR. ALB. 45-E UNI3653	SEEGER RING	BAGUE SEEGER	SEEGERRING 45-E	
16	B07S01652	COCLEA SX PU 200	LEFT PICK-UP AUGER 200	VIS GAUCHE PU 200	LINKE PICK-UP ZUBRINGERSCHNECK	
17	B07S01651	COCLEA DX PU 200	RIGHT PICK-UP AUGER 200	VIS DROIT PU 200	RECHTE PICK-UP ZUBRINGERSCHNEC	
18	B01527654	RALLA 45 62 4	FIFTH WHEEL	BUTEE	SCHEIBE	
19	B01547230	SPES. 45 62 2	SHIM	ENTRETOISE	SCHEIBE	
20	B07S01849G	LAMIERA CONVOGLIAMENTO PU M	BAFFLE PLATE PU M			
21	B0C003712	BOCCOLA	BUSH	COQUILLE	BUCHSE	
22	B0C002410	PIATTO FISSAGGIO GOMMA PUL	FIXING PLATE	PLAT FIXAGE	GUMMIFIXIERPLATTE	
23	B07V00074	PROT. COCLEA PU 180	AUGER PROTECTION	PROTECTION PELLETEUSE PU 180	SCHNECKENSCHUTZ	
24	B01000013	RIVETTO STR. 5X18 U9200A AL	RIVET	RIVET	ABREISSNIETEN 6X18	
25	B0C002409	SOSTEGNO GOMMA PUL	RUBBER SUPPORT	SUPPORT PNEUS	GUMMIHALTER	
26	B01000012	RIVETTO STR. 6,4X22 ACCIAIO	RIVET	RIVET	ABREISSNIETEN 6X26	
27	F01020472	VITE M10X1,5X25 U5739 8.8ZN	SCR. M10X1,5X25 U5739 8.8ZN	VIS M10X1,5X25 U5739 8.8 ZN	SCHRAUBE M10X1,5X25 U5739 8.8	TORNILLO 10X25 U5739 8.8 ZN
28	F01410062	ROS.M10 10,5X 18X 2 U6592 ZN	WASHER M10 10,5X 18X 2 U6592	RONDELLE M10 10,5X18X2 ZN	DICHTUNGSRING M10 10,5X18X2 ZN	RONDANA M10 10,5X18X2 ZN
29	F01230202	DADO M10X1,25 D985 8 ZN	SELF-LOCKING NUT	ECROU NYLSTOP	SELBSTSICHERNDE MUTTER M10-5S	
30	F02050101	ANEL. D ARR. ALB. 25-E UNI3653	SEEGER RING	BAGUE SEEGER	SEEGERRING 25-E	
31	B0C100017G	ATTACCO LAMIERA CONVOGLIAMENTO	CONVEYOR PLATE ATTACHMENT			
32	B00471230	VITE TTEI M12X 30-8.8 UNBRA	SCREW	VIS	SCHRAUBE TTEI M12X 30-8.8	
33	F01410076	ROS.M12 13X 20X2,0 U1749 ZN	WASHER	RONDELLE	SCHEIBE	
34	B00920412	DADO M12X1,75 D985 8 ZN	NUT	ECROU	SELBSTSICHERNDE MUTTER M12-5S	
35	B0C004002G	GANCIO	HOOK			
36	F01020510	VITE M12X1,75X30 U5739 8.8ZN	SCR. M12X1,75X30 U5739 8.8ZN	VIS M12X1,75X30 U5739 8.8ZN	SCHRAU.M12X1,75X30 U5739 8.8ZN	TORN. M12X1,75X30 U5739 8.8ZN
37	B00920412	DADO M12X1,75 D985 8 ZN	NUT	ECROU	SELBSTSICHERNDE MUTTER M12-5S	
38	B01000021	SPINOTTO PER MOTOZAPPA 10X45	PIN	EPINE	STIFT	
39	B0C005187	ATTACCO TAMPONE	PLUG ATTACHMENT	ATTELAGE TAMPON	PROPFENBEFESTIGUNG	
40	F01020476	VITE M10X1,5 X 30 U5739 8.8ZN	SCREW	VIS	SCHRAUBE	
41	F01410062	ROS.M10 10,5X 18X 2 U6592 ZN	WASHER M10 10,5X 18X 2 U6592	RONDELLE M10 10,5X18X2 ZN	DICHTUNGSRING M10 10,5X18X2 ZN	RONDANA M10 10,5X18X2 ZN
42	F01230202	DADO M10X1,25 D985 8 ZN	SELF-LOCKING NUT	ECROU NYLSTOP	SELBSTSICHERNDE MUTTER M10-5S	
43	B07049749	TAMPONE 50X21 M10	BUMPER 50X21 M10	TAMPON 50X21 M10	PUFFER 50X21 M10	
44	B00710310	DADO M10X1,25 U5588 6S ZN	NUT	ECROU	MUTTER M10-6S	
45	F01230202	DADO M10X1,25 D985 8 ZN	SELF-LOCKING NUT	ECROU NYLSTOP	SELBSTSICHERNDE MUTTER M10-5S	
46	B0C3P0014	DEVIATORE DX COCLEA	RIGHT AUGER SEPARATOR	COMMUTATEUR DROIT VIS	SCHALTER RECHTS	
47	B0C3P0015	DEVIATORE SX COCLEA	AUGER LEFT SWITCH	COMMUTATEUR GAUCHE VIS	SCHALTER LINKS	
48	F01030208	VITE TTEI M 8X 20-10,9 UMBRAKO	SCREW	VIS	SCHRAUBE TTEI M 8X 20-10.9	
49	F01420048	ROS.M8 8,4X 24X 2 U6593 ZN	WASHER	RONDELLE	SCHEIBE	
50	B02500010	BRONZINA 45 53 25	BUSHING	COUSSINET	BRONZEBUCHSE 45 53 25	
51	B01300046	DISTANZIALE 35,2X42,4X15	SPACER	ENTRETOISE	DISTANZSTUECK 35,2X42,4X15	

TAV_125

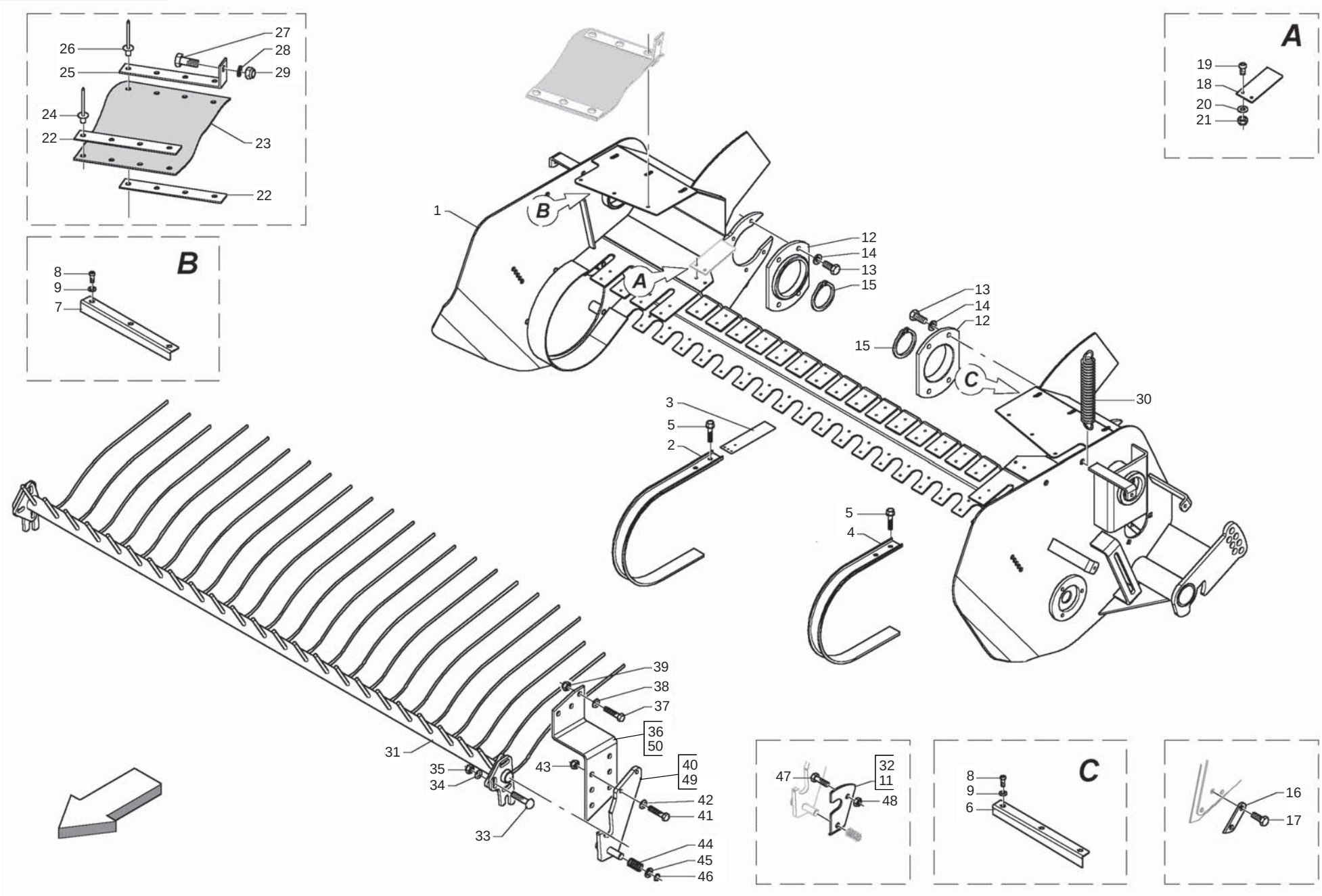

MASCHIO

cod. B0D5P0108

PICK-UP L
PICK-UP L

TAV_125

Pos.	Cod.	Descrizione	Description	Description	Benennung	Descripcion
1	B07SP0193	TELAIO PU L LT	FRAME PU LT	CHASSIS PU LT	RAHMEN PU L LT	
2	B0C003304	FASCIA CENTRALE PICK UP TOPCUT	PICK-UP CENTRAL BAND TOPCUT	BANDE CENTRALE PICK-UP TOPCUT	ZENTRALES PICK-UP BAND	
3	B0C002069	COMPENSO FASCIA	BAND EXTENSION	EPAISSEUR BANDE	BANDVERLAENGERUNG	
4	B0C003183	FASCIA LATERALE PICK-UP	LATERAL BAND PICK-UP	BANDE LATERALE	SEITENBAND	
5	B00370615	VITE M 6X16 ZN SEZ.TRIL. U8111	SCREW	VIS	SCHRAUBE	
6	B0C3P0083	DEVIATORE SX COCLEA PU L LT	RIGHT AUGER SEPARATOR	COMMUTATEUR DROIT VIS	SCHALTER LINKS PU L LT	
7	B0C3P0082	DEVIATORE DX COCLEA PU L LT	RIGHT AUGER SEPARATOR	COMMUTATEUR DROIT VIS	SCHALTER RECHTS PU L LT	
8	F01030208	VITE TTEI M 8X 20-10,9 UMBRAKO	SCREW	VIS	SCHRAUBE TTEI M 8X 20-10.9	
9	F01420048	ROS.M8 8,4X 24X 2 U6593 ZN	WASHER	RONDELLE	SCHEIBE	
11	BSP000027	STAFFA SX				
12	B01300715	FLANGIA SX PICK-UP	PICK-UP FLANGE	FLASQUE GAUCHE POUR PICK-UP	PICK-UP FLANSCH	
13	B00181015	VITE M10X1,5 X 16 U5739 8.8ZN	SCREW	VIS	SCHRAUBE	
14	F01410062	ROS.M10 10,5X 18X 2 U6592 ZN	WASHER M10 10,5X 18X 2 U6592	RONDELLE M10 10,5X18X2 ZN	DICHTUNGSRING M10 10,5X18X2 ZN	RONDANA M10 10,5X18X2 ZN
15	B01700095	ANEL. D ARR. ALB. 95-E UNI3653	SEEGER RING	BAGUE SEEGER	SEEGERRING 95-E	
16	B0C6P0039	FERMO PICK-UP NORMALE	STANDARD PICK-UP LOCK	ARRET PICK-UP NORMAL		
17	F01020512	VITE M12X1,75X35 U5739 8.8ZN	SCR. M12X1,75X35 U5739 8.8ZN	VIS M12X1,75X35 5739 8.8 ZN	SCHR. M12X1,75X35 5739 8.8 ZN	TORN. M12X1,75X35 5739 8.8 ZN
18	B0C004894	COMPENSO PER PU NORMALE	PICK-UP SHIM	EPAISSEUR POUR PU NORMAL	PICK-UP AUSGLEICHSTUECK	
19	B00470620	VITE TTEI M 6X 20-8.8 UNBRA	SCREW	VIS	SCHRAUBE TTEI M6X20-10.9	
20	F01410037	ROS.M6 6,4X12,5X1,6 U6592 ZN	WASHER	RONDELLE	BEILAGSCHEIBE 6	
21	B00920106	DADO M6X1 D985 8ZN	NUT	ECROU	SELBSTSICHERNDE MUTTER M6-5S	
22	B0C003730	FISSAGGIO GOMMA	FIXING PLATE	FIXAGE CAOUTCHOUC	GUMMIFIXIERPLATTE	
23	B07V00081	PROT. COCLEA PU 200	AUGER GUARD	PROTECTION PELLETEUSE PU 200	SCHNECKENSCHUTZ	
24	B01000013	RIVETTO STR. 5X18 U9200A AL	RIVET	RIVET	ABREISSNIETEN 6X18	
25	B0C003729	SOSTEGNO GOMMA	RUBBER SUPPORT	SUPPORT CAOUTCHOUC	GUMMIHALTER	
26	B01000012	RIVETTO STR. 6,4X22 ACCIAIO	RIVET	RIVET	ABREISSNIETEN 6X26	
27	F01020472	VITE M10X1,5X25 U5739 8.8ZN	SCR. M10X1,5X25 U5739 8.8ZN	VIS M10X1,5X25 U5739 8.8 ZN	SCHRAUBE M10X1,5X25 U5739 8.8	TORNILLO 10X25 U5739 8.8 ZN
28	F01410062	ROS.M10 10,5X 18X 2 U6592 ZN	WASHER M10 10,5X 18X 2 U6592	RONDELLE M10 10,5X18X2 ZN	DICHTUNGSRING M10 10,5X18X2 ZN	RONDANA M10 10,5X18X2 ZN
29	F01230202	DADO M10X1,25 D985 8 ZN	SELF-LOCKING NUT	ECROU NYLSTOP	SELBSTSICHERNDE MUTTER M10-5S	
30	B01810412	MOLLA	SPRING	RESSORT	FEDER	
31	B07SP0200	RASTRELLO PU L LT	RAKE	RATEAU PU LT	HARKE PU L LT	
32	B0C003727	AGGANCIO DX	RIGHT RAKE LINKAGE	ACCROCHAGE DROIT	RECHTER NIEDERHALTERRECHENANSC	
33	B00523395	VITE SPECIALE TTQST M12X45-8.8	SPECIAL SCREW	VIS SPECIALE	SCHRAUBE TTQST M12X 45-8.8	
34	B01522469	RALLA 13 42 6	FIFTH WHEEL	BUTEE	SCHEIBE	
35	B00920412	DADO M12X1,75 D985 8 ZN	NUT	ECROU	SELBSTSICHERNDE MUTTER M12-5S	
36	B0C000056	ATTACCO SX RASTRELLO	LEFT RAKE ATTACHMENT	ATTELAGE GAUCHE GRILLE RABATTE	LINKE NIEDERHALTERRECHENHALTER	
37	F01020516	VITE M12X1,75X45 U5739 8.8ZN	SCR. M12X1,75X45 U5739 8.8ZN	VIS M12X1,75X45 U5739 8.8 ZN	SCHARAUBE M12X1,75X45 U5739 ZN	TORNIL.M12X1,75X45 U5739 8.8ZN
38	F01410076	ROS.M12 13X 20X2,0 U1749 ZN	WASHER	RONDELLE	SCHEIBE	
39	B00920412	DADO M12X1,75 D985 8 ZN	NUT	ECROU	SELBSTSICHERNDE MUTTER M12-5S	
40	BSP000025	ATTACCO SX RASTRELLO				
41	F01020512	VITE M12X1,75X35 U5739 8.8ZN	SCR. M12X1,75X35 U5739 8.8ZN	VIS M12X1,75X35 5739 8.8 ZN	SCHR. M12X1,75X35 5739 8.8 ZN	TORN. M12X1,75X35 5739 8.8 ZN
42	F01420120	ROS.M12 13X 36X2,5 U6593 ZN	WASHER	RONDELLE	SCHEIBE	
43	B00920412	DADO M12X1,75 D985 8 ZN	NUT	ECROU	SELBSTSICHERNDE MUTTER M12-5S	
44	B01817605	MOLLA C FILO 2,5 P24,5 L=60	SPRING	RESSORT	C-FEDER	
45	F01410124	ROS.M20 21X 37X 3 U6592 ZN	WASHER M20 21X 37X 3 U6592 ZN	RONDEL.M20 21X 37X 3 U6592 ZN	MUTTER M20 21X 37X 3 U6592 ZN	ARANDELA M20 21X37X3 U6592 ZN
46	B01700020	ANEL. D ARR. ALB. 20-E UNI3653	SEEGER RING	BAGUE SEEGER	SEEGERRING 20-E	
47	F01020562	VITE M16X2X30 U5739 8.8ZN	SCR. M16X2X30 U5739 8.8ZN	VIS M16X2X30 U5739 8.8 ZN	SCHRAUBE M16X2X30 U5739 8.8 ZN	TORNILLO M16X2X30 U5739 8.8 ZN
48	F01200444	DADO M16X2 U5589 CL8 ZN 6SZN	NUT M16X2 U5589 6SZN	ECROU M16X2	MUTTER M16X2	DADO M16X2
49	BSP000024	ATTACCO DX RASTRELLO				
50	BSP000023	ATTACCO DX RASTRELLO				

TAV_185

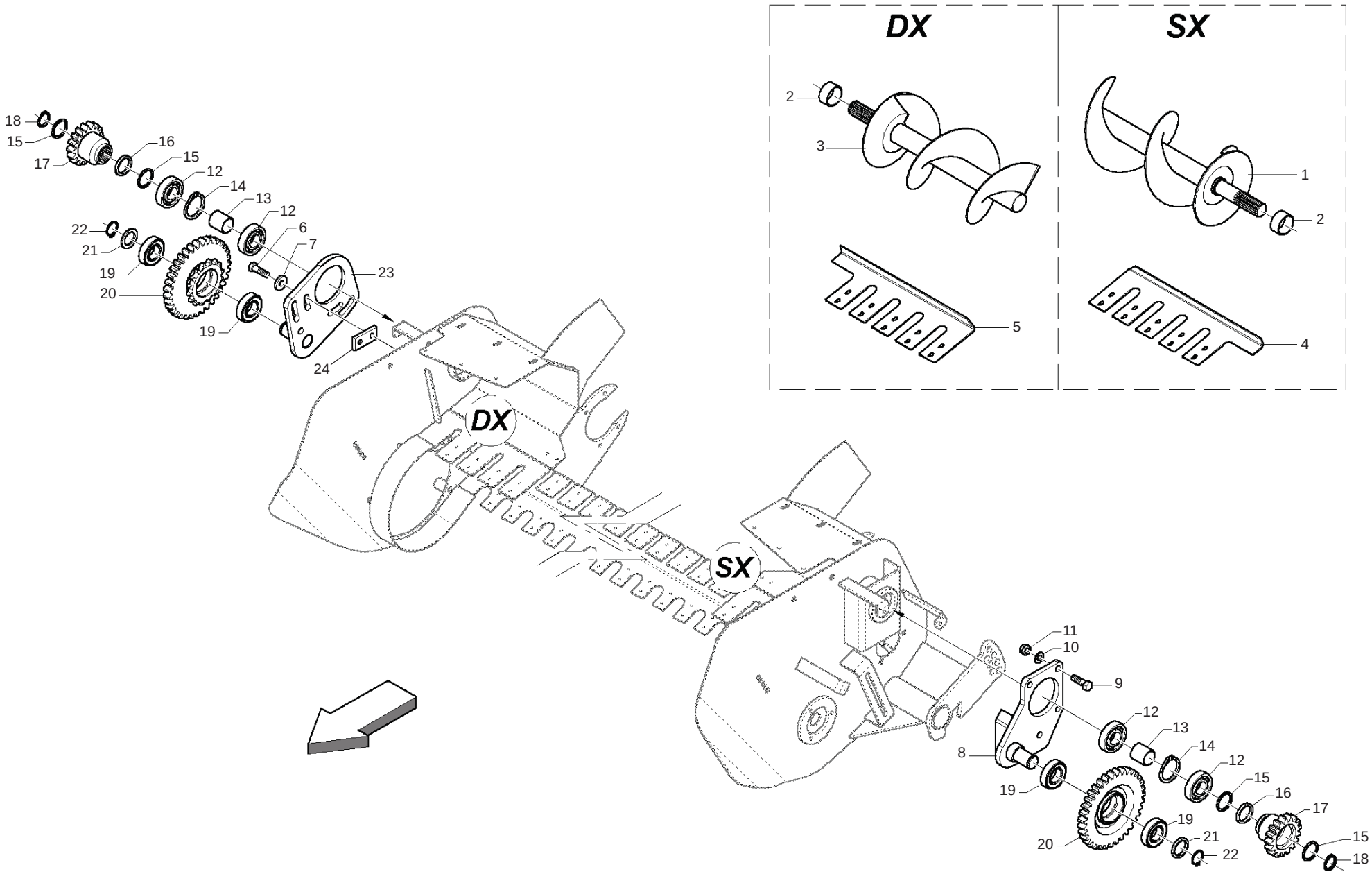
DX
SX
2
3
1
2
5
4
18
15
17
16
15
12
14
13
12
22
21
19
20
19
6
7
23
24
DX
SX
11
10
9
12
13
14
12
15
16
17
15
18
8
19
20
19
21
22

COCLEE PICK-UP L
AUGER PICK-UP L

TAV_185

Pos.	Cod.	Descrizione	Description	Description	Benennung	Descripcion
1	B07S01654	COCLEA SX PU 220	LEFT PICK-UP AUGER 220	VIS GAUCHE PU 220	LINKE PICK-UP ZUBRINGERSCHNECK	
2	B01300046	DISTANZIALE 35,2X42,4X15	SPACER	ENTRETOISE	DISTANZSTUECK 35,2X42,4X15	
3	B07S01653	COCLEA DX PU 220	RIGHT PICK-UP AUGER 220	VIS DROIT PU 220	RECHTE PICK-UP ZUBRINGERSCHNEC	
4	B0C3P0100	GUIDA COCLEA SX PU L LT	AUGER GUIDE LEFT SIDE	GUIDE PALLETEUSE COTE GAUCHE	SCHNECKENFOERDERER FUEHRUNG LI	
5	B0C3P0099	GUIDA COCLEA DX PU L LT	AUGER GUIDE RIGHT SIDE	GUIDE PALLETEUSE COTE DROIT	SCHNECKENFOERDERER FUEHRUNG RE	
6	F01020152	VITE M12X1,75X40 U5737 8.8ZN	SCR. M12X1,75X40 U5737 8.8ZN	VIS M12X1,75X40 U5737 8.8 ZN	SCHRAUBE M12X1,75X40U57378.8ZN	TORNIL.M12X1,75X40 U5737 8.8ZN
7	B01516038	RALLA 13 32 5	FIFTH WHEEL	BUTEE	SCHEIBE	
8	B07SP0238	PIASTRA SX	PLATE LINK SIDE	PLAQUE COTE GAUCHE	PLATTE LINKS	
9	F01020152	VITE M12X1,75X40 U5737 8.8ZN	SCR. M12X1,75X40 U5737 8.8ZN	VIS M12X1,75X40 U5737 8.8 ZN	SCHRAUBE M12X1,75X40U57378.8ZN	TORNIL.M12X1,75X40 U5737 8.8ZN
10	F01410076	ROS.M12 13X 20X2,0 U1749 ZN	WASHER	RONDELLE	SCHEIBE	
11	B00920412	DADO M12X1,75 D985 8 ZN	NUT	ECROU	SELBSTSICHERNDE MUTTER M12-5S	
12	F04010178	CUSCINETTO 6207-2RS CAT.AST004	BEARING	PALIER 6207-2RS	LAGER	
13	B01300739	DISTANZIALE 35X42X41	SPACER	ENTRETOISE	DISTANZSTUECK 35X42X41	
14	B01710072	ANEL. D ARR. FORO 72-I UNI3654	SEEGER RING	BAGUE SEEGER	SEEGERRING 72-I	
15	B01534416	SPES. 35 43 1 ZINCATO	SHIM	ENTRETOISE	AUSGLEICHSCHEIBE 35X43X1	
16	B013P0133	RALLA 35 45 5	FIFTH WHEEL 35 45 5	BUTEE 35 45 5	DISTANZSCHEIBE 35 45 5	
17	B034P0048	INGRANAGGIO Z=17 M=5	GEAR Z=17 M=5	ENGRANAGE Z=17 M=5	ZAHNRADPAAR Z=17 M=5	
18	B01700035	ANEL. D ARR. ALB. 35-E UNI3653	SEEGER RING	BAGUE SEEGER	SEEGERRING 35-E	
19	B02043016	CUSCINETTO PER TENDITORE	BEARING	ROULEMENT	LAGER	
20	B034P0049	INGR. Z=35 M=5 WITH SPROCKET Z	GEAR Z=35 M=5 WITH SPROCKET Z=	PINION Z=16 3 4 ET ENGRANAGE Z	RITZEL Z=16 3 4 UND ZAHNRADPAA	
21	B013P0130	RALLA 30 45 3	FIFTH WHEEL 30 45 3	BUTEE 30 45 3	DISTANZSCHEIBE 30 45 3	
22	F02050112	ANEL. D ARR. ALB. 30-E UNI3653	SEEGER RING	BAGUE SEEGER	SEEGERRING 30-E	
23	B07SP0239	PIASTRA DX	PLATE RIGHT SIDE	PLAQUE COTE DROIT	PLATTE RECHTS	
24	B0C003172	ATTACCO TENDICATENA	CHAIN TIGHTENER COUPLING	ATTELAGE TENDEUR DE CHAINE	KETTENSPANNER BEFESTIGUNG	

TAV_145

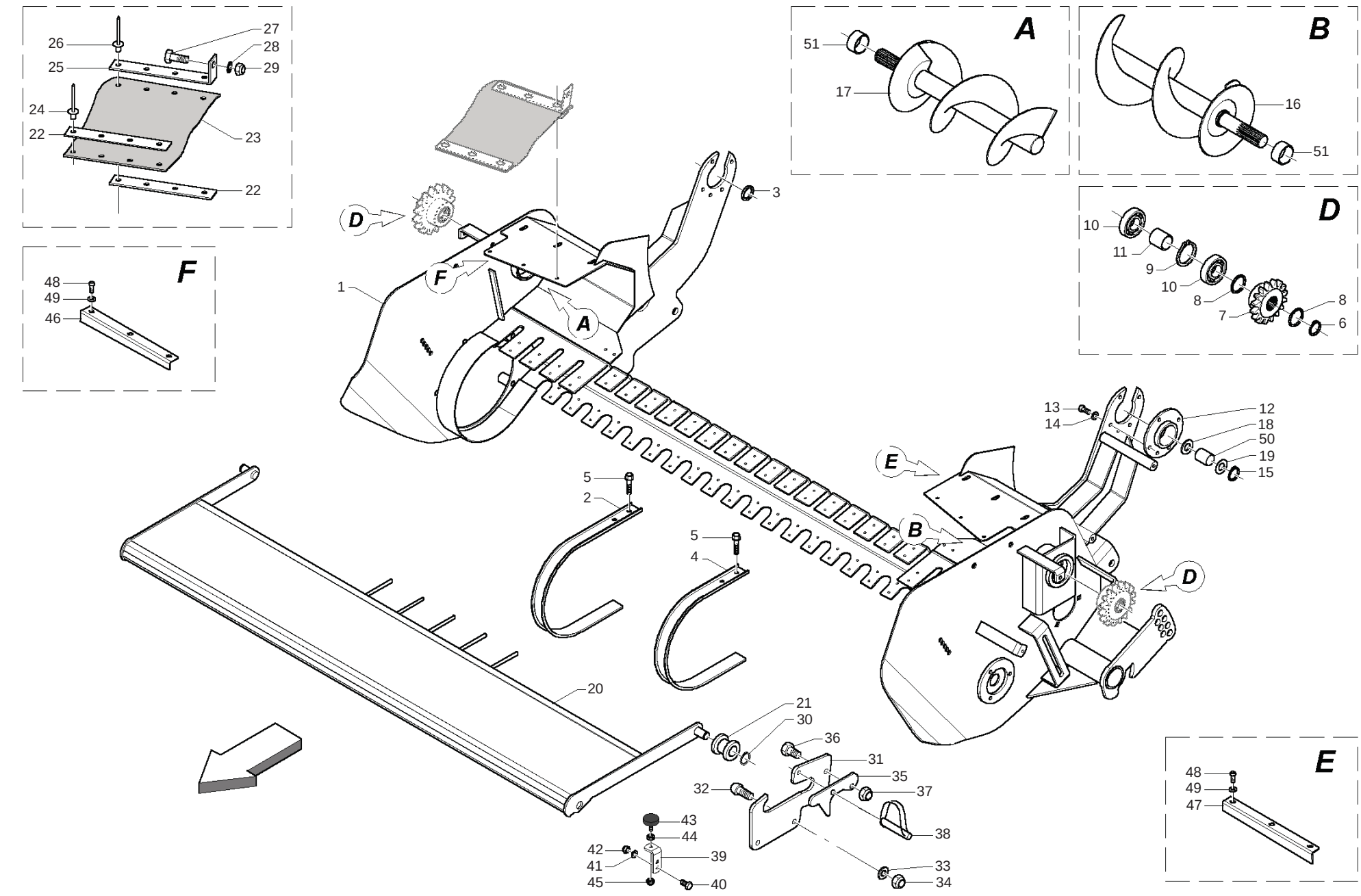

MASCHIO

cod. B0D5P0108

PICK-UP L CUT
PICK-UP L CUT

TAV_145

Pos.	Cod.	Descrizione	Description	Description	Benennung	Descripcion
1	B07SP0201	TELAIO PU L LTC	FRAME PU LTC	CHASSIS PU LTC	RAHMEN PU L LTC	
2	B0C003304	FASCIA CENTRALE PICK UP TOPCUT	PICK-UP CENTRAL BAND TOPCUT	BANDE CENTRALE PICK-UP TOPCUT	ZENTRALES PICK-UP BAND	
3	B01300003	RALLA ATTACCO PU	WASHER ATTACK PICK-UP			
4	B0C003183	FASCIA LATERALE PICK-UP	LATERAL BAND PICK-UP	BANDE LATERALE	SEITENBAND	
5	B00370615	VITE M 6X16 ZN SEZ.TRIL. U8111	SCREW	VIS	SCHRAUBE	
6	B01700035	ANEL. D ARR. ALB. 35-E UNI3653	SEEGER RING	BAGUE SEEGER	SEEGERRING 35-E	
7	B034P0005	PIGNONE Z=13-3 4	PINION	PIGNON	RITZEL	
8	B01534416	SPES. 35 43 1 ZINCATO	SHIM	ENTRETOISE	AUSGLEICHSCHEIBE 35X43X1	
9	B01710072	ANEL. D ARR. FORO 72-I UNI3654	SEEGER RING	BAGUE SEEGER	SEEGERRING 72-I	
10	F04010178	CUSCINETTO 6207-2RS CAT.AST004	BEARING	PALIER 6207-2RS	LAGER	
11	B01300739	DISTANZIALE 35X42X41	SPACER	ENTRETOISE	DISTANZSTUECK 35X42X41	
12	B01300649	FLANGIA	FLANGE	FLASQUE	PICK-UP FLANSCH	
13	B00181015	VITE M10X1,5 X 16 U5739 8.8ZN	SCREW	VIS	SCHRAUBE	
14	F01410062	ROS.M10 10,5X 18X 2 U6592 ZN	WASHER M10 10,5X 18X 2 U6592	RONDELLE M10 10,5X18X2 ZN	DICHTUNGSRING M10 10,5X18X2 ZN	RONDANA M10 10,5X18X2 ZN
15	B01700045	ANEL. D ARR. ALB. 45-E UNI3653	SEEGER RING	BAGUE SEEGER	SEEGERRING 45-E	
16	B07S01654	COCLEA SX PU 220	LEFT PICK-UP AUGER 220	VIS GAUCHE PU 220	LINKE PICK-UP ZUBRINGERSCHNECK	
17	B07S01653	COCLEA DX PU 220	RIGHT PICK-UP AUGER 220	VIS DROIT PU 220	RECHTE PICK-UP ZUBRINGERSCHNEC	
18	B01527654	RALLA 45 62 4	FIFTH WHEEL	BUTEE	SCHEIBE	
19	B01547230	SPES. 45 62 2	SHIM	ENTRETOISE	SCHEIBE	
20	B07S01848G	LAMIERA CONVOGLIAMENTO PU L	WIDE PICK-UP L BAFFLE PLATE			
21	B0C003712	BOCCOLA	BUSH	COQUILLE	BUCHSE	
22	B0C003730	FISSAGGIO GOMMA	FIXING PLATE	FIXAGE CAOUTCHOUC	GUMMIFIXIERPLATTE	
23	B07V00081	PROT. COCLEA PU 200	AUGER GUARD	PROTECTION PELLETEUSE PU 200	SCHNECKENSCHUTZ	
24	B01000013	RIVETTO STR. 5X18 U9200A AL	RIVET	RIVET	ABREISSNIETEN 6X18	
25	B0C003729	SOSTEGNO GOMMA	RUBBER SUPPORT	SUPPORT CAOUTCHOUC	GUMMIHALTER	
26	B01000012	RIVETTO STR. 6,4X22 ACCIAIO	RIVET	RIVET	ABREISSNIETEN 6X26	
27	F01020472	VITE M10X1,5X25 U5739 8.8ZN	SCR. M10X1,5X25 U5739 8.8ZN	VIS M10X1,5X25 U5739 8.8 ZN	SCHRAUBE M10X1,5X25 U5739 8.8	TORNILLO 10X25 U5739 8.8 ZN
28	F01410062	ROS.M10 10,5X 18X 2 U6592 ZN	WASHER M10 10,5X 18X 2 U6592	RONDELLE M10 10,5X18X2 ZN	DICHTUNGSRING M10 10,5X18X2 ZN	RONDANA M10 10,5X18X2 ZN
29	F01230202	DADO M10X1,25 D985 8 ZN	SELF-LOCKING NUT	ECROU NYLSTOP	SELBSTSICHERNDE MUTTER M10-5S	
30	F02050101	ANEL. D ARR. ALB. 25-E UNI3653	SEEGER RING	BAGUE SEEGER	SEEGERRING 25-E	
31	B0C100017G	ATTACCO LAMIERA CONVOGLIAMENTO	CONVEYOR PLATE ATTACHMENT			
32	B00471230	VITE TTEI M12X 30-8.8 UNBRA	SCREW	VIS	SCHRAUBE TTEI M12X 30-8.8	
33	F01410076	ROS.M12 13X 20X2,0 U1749 ZN	WASHER	RONDELLE	SCHEIBE	
34	B00920412	DADO M12X1,75 D985 8 ZN	NUT	ECROU	SELBSTSICHERNDE MUTTER M12-5S	
35	B0C004002G	GANCIO	HOOK			
36	F01020510	VITE M12X1,75X30 U5739 8.8ZN	SCR. M12X1,75X30 U5739 8.8ZN	VIS M12X1,75X30 U5739 8.8ZN	SCHRAU.M12X1,75X30 U5739 8.8ZN	TORN. M12X1,75X30 U5739 8.8ZN
37	B00920412	DADO M12X1,75 D985 8 ZN	NUT	ECROU	SELBSTSICHERNDE MUTTER M12-5S	
38	B01000021	SPINOTTO PER MOTOZAPPA 10X45	PIN	EPINE	STIFT	
39	B0C005187	ATTACCO TAMPONE	PLUG ATTACHMENT	ATTELAGE TAMPON	PROPFENBEFESTIGUNG	
40	B00181030	VITE M10X1,5 X 30 U5739 8.8ZN	SCREW	VIS	SCHRAUBE	
41	F01410062	ROS.M10 10,5X 18X 2 U6592 ZN	WASHER M10 10,5X 18X 2 U6592	RONDELLE M10 10,5X18X2 ZN	DICHTUNGSRING M10 10,5X18X2 ZN	RONDANA M10 10,5X18X2 ZN
42	F01230202	DADO M10X1,25 D985 8 ZN	SELF-LOCKING NUT	ECROU NYLSTOP	SELBSTSICHERNDE MUTTER M10-5S	
43	B07049749	TAMPONE 50X21 M10	BUMPER 50X21 M10	TAMPON 50X21 M10	PUFFER 50X21 M10	
44	B00710310	DADO M10X1,25 U5588 6S ZN	NUT	ECROU	MUTTER M10-6S	
45	F01230202	DADO M10X1,25 D985 8 ZN	SELF-LOCKING NUT	ECROU NYLSTOP	SELBSTSICHERNDE MUTTER M10-5S	
46	B0C3P0082	DEVIATORE DX COCLEA PU L LT	RIGHT AUGER SEPARATOR	COMMUTATEUR DROIT VIS	SCHALTER RECHTS PU L LT	
47	B0C3P0083	DEVIATORE SX COCLEA PU L LT	RIGHT AUGER SEPARATOR	COMMUTATEUR DROIT VIS	SCHALTER LINKS PU L LT	
48	F01030208	VITE TTEI M 8X 20-10,9 UMBRAKO	SCREW	VIS	SCHRAUBE TTEI M 8X 20-10.9	
49	F01420048	ROS.M8 8,4X 24X 2 U6593 ZN	WASHER	RONDELLE	SCHEIBE	
50	B02500010	BRONZINA 45 53 25	BUSHING	COUSSINET	BRONZEBUCHSE 45 53 25	
51	B01300046	DISTANZIALE 35,2X42,4X15	SPACER	ENTRETOISE	DISTANZSTUECK 35,2X42,4X15	

TAV_150

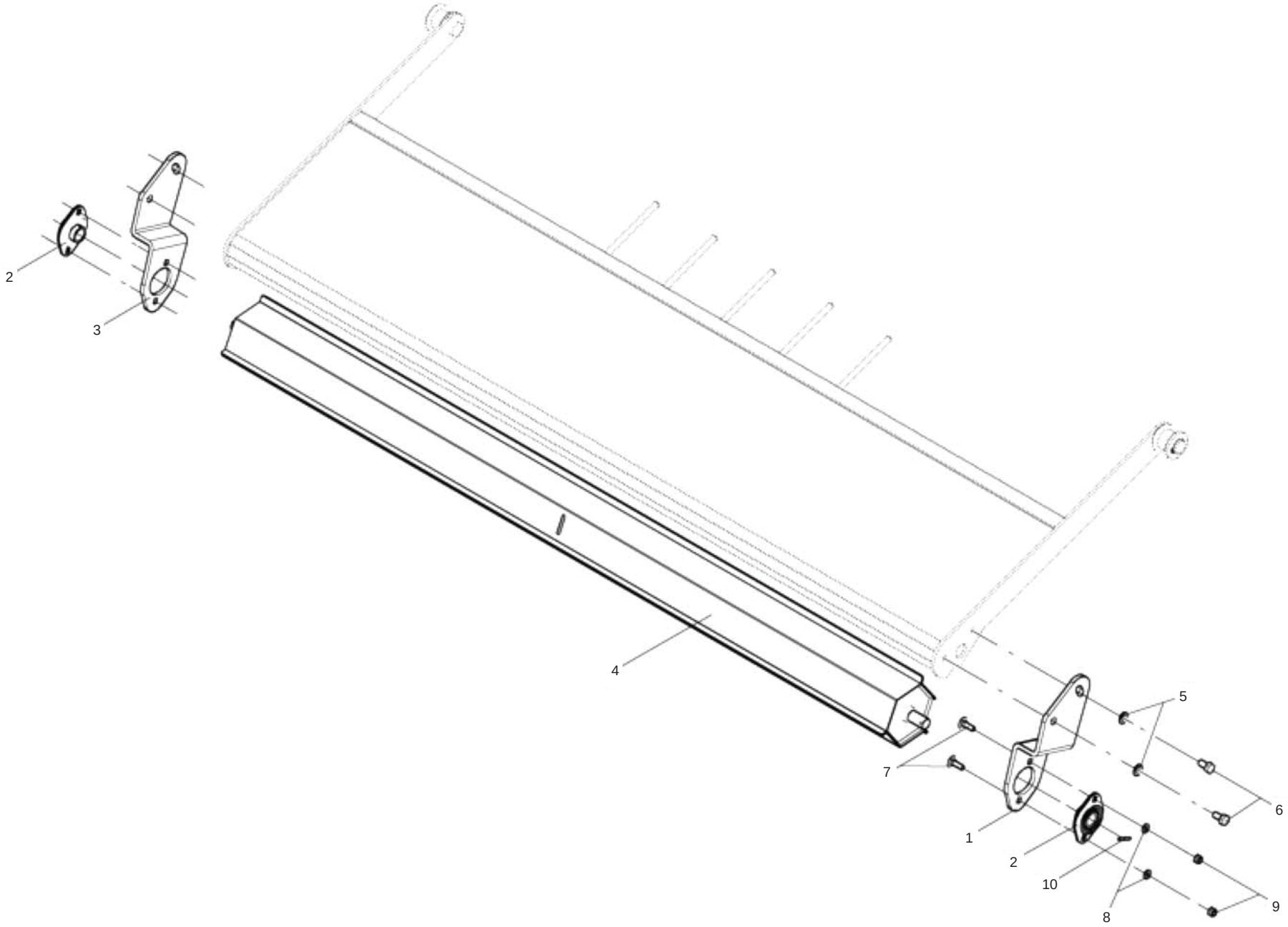

MASCHIO

cod. B0D5P0108

RULLO CONVOGLIATORE CUT (PICK-UP M)
ROLLER CONVEYOR CUT (PICK-UP M)

TAV_150

Pos.	Cod.	Descrizione	Description	Description	Benennung	Descripcion
1	B0C4P0187	ATTACCO SX	ATTACCO SX .			
2	B02341020	SUPP.FLANG.OV 20 LAM NBR-NSK	SUPPORT	SUPPORT	GEFLANSCHTES LAGER	
3	B0C4P0188	ATTACCO DX	ATTACCO DX .			
4	B07SP0341	RULLO CONVOGLIATORE M	CONVEYOR ROLLER M			
5	B01411020	RONDELLA PIANA LARGA 10X30	WIDE FLAT WASHER 10X30			
6	F01020470	VITE M10X1,5X20 U5739 8.8ZN	SCR. M10X1,5X20 U5739 8.8ZN	VIS M10X1,5X20 U5739 8.8 ZN	SCHRAUBE M10X1,5X20 U5739 ZN	TORNILLOM10X1,5X20 U5739 8.8ZN
7	F01060202	VITE M8X1,25X25 U5731 4.6ZN	SCR. M8X1,25X25 U5731 4.6ZN	VIS M8X1,25X25 U5731 4.6	DUEBEL M8X1,25X25 U5731 4.6 ZN	TORNILLO M8X1,25X25 U5731 4.6
8	F01410051	ROS.M8 8,4X 17X1,6 U6592 ZN	WASHER M8 8,4X17X1,6 U6592 ZN	RONDELLE	SCHEIBE	
9	B00920208	DADO M8X1 D985 8ZN	NUT M8X1 D985 8ZN	ECROU	SELBSTSICHERNDE MUTTER M8-5S	
10	F02100065	SPINA E.P. 4X 30 U6873 C70 BR	PIN EL. 4X30 DIN 1481	GOUPILLE EL.4 X30 DIN 1481	SPANNSTIFT 4X30 DIN 1481	CLAVIJA EL.4 X30 DIN 1481

TAV_155

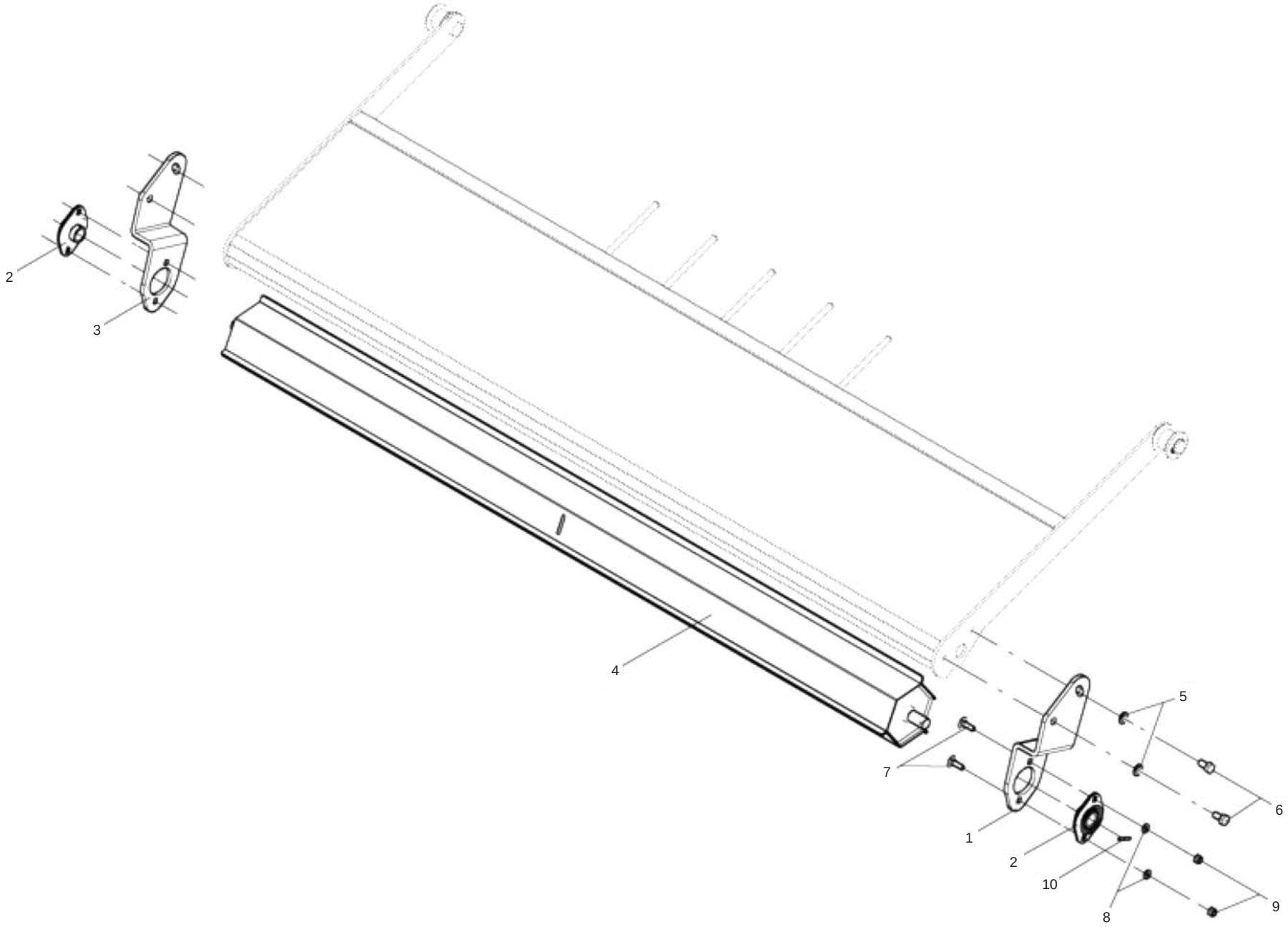

MASCHIO

cod. B0D5P0108

RULLO CONVOGLIATORE CUT (PICK-UP L)
ROLLER CONVEYOR CUT (PICK-UP L)

TAV_155

Pos.	Cod.	Descrizione	Description	Description	Benennung	Descripcion
1	B0C4P0187	ATTACCO SX	ATTACCO SX .			
2	B02341020	SUPP.FLANG.OV 20 LAM NBR-NSK	SUPPORT	SUPPORT	GEFLANSCHTES LAGER	
3	B0C4P0188	ATTACCO DX	ATTACCO DX .			
4	B07SP0342	RULLO CONVOG. L	RULLO CONVOG. L .			
5	B01411020	RONDELLA PIANA LARGA 10X30	WIDE FLAT WASHER 10X30			
6	F01020470	VITE M10X1,5X20 U5739 8.8ZN	SCR. M10X1,5X20 U5739 8.8ZN	VIS M10X1,5X20 U5739 8.8 ZN	SCHRAUBE M10X1,5X20 U5739 ZN	TORNILLOM10X1,5X20 U5739 8.8ZN
7	F01060202	VITE M8X1,25X25 U5731 4.6ZN	SCR. M8X1,25X25 U5731 4.6ZN	VIS M8X1,25X25 U5731 4.6	DUEBEL M8X1,25X25 U5731 4.6 ZN	TORNILLO M8X1,25X25 U5731 4.6
8	F01410051	ROS.M8 8,4X 17X1,6 U6592 ZN	WASHER M8 8,4X17X1,6 U6592 ZN	RONDELLE	SCHEIBE	
9	B00920208	DADO M8X1 D985 8ZN	NUT M8X1 D985 8ZN	ECROU	SELBSTSICHERNDE MUTTER M8-5S	
10	F02100065	SPINA E.P. 4X 30 U6873 C70 BR	PIN EL. 4X30 DIN 1481	GOUPILLE EL.4 X30 DIN 1481	SPANNSTIFT 4X30 DIN 1481	CLAVIJA EL.4 X30 DIN 1481

TAV_159

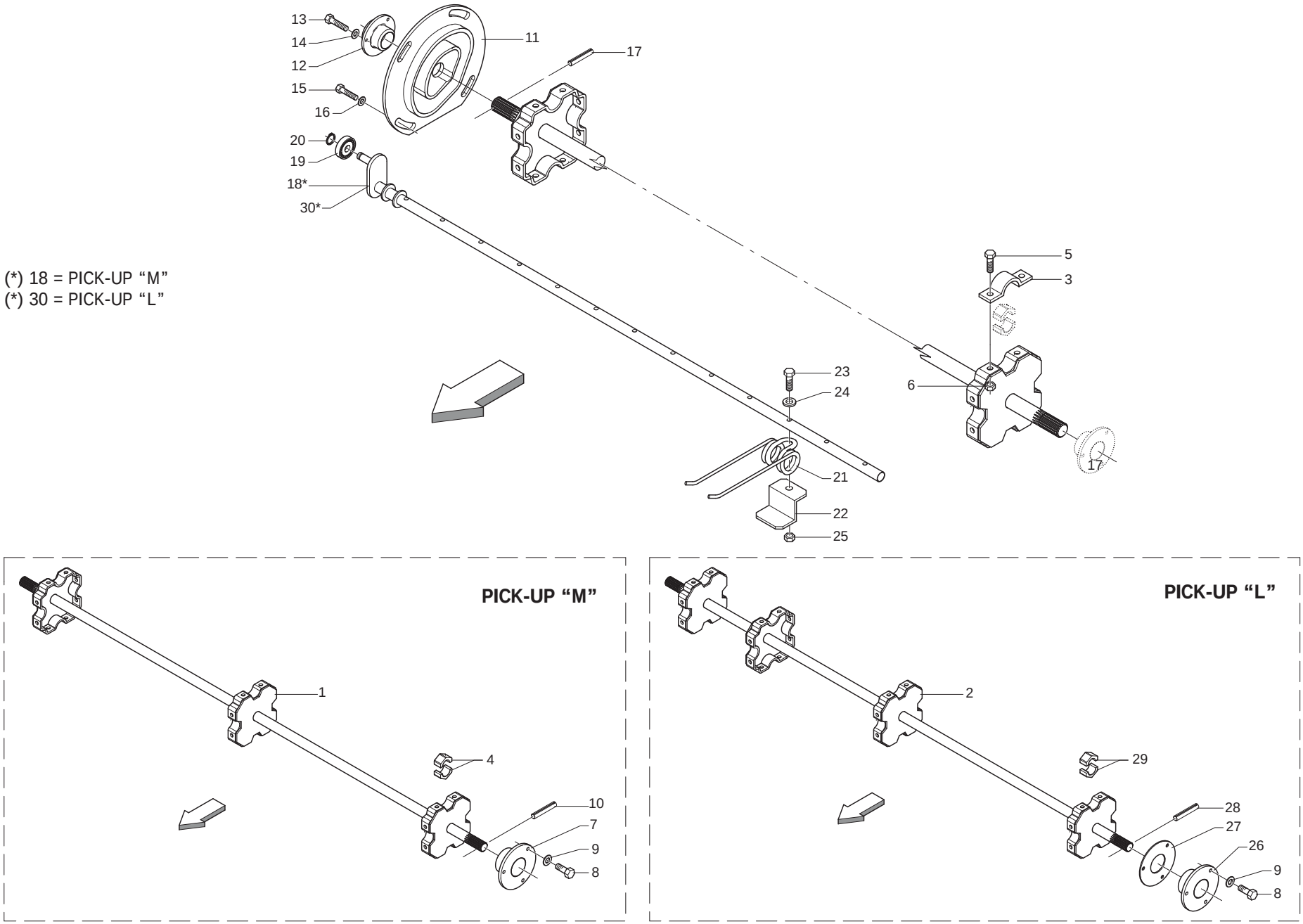
13
14
12
15
16
20
19
18*
30*
11
17
5
3
6
23
24
21
22
25
17
(*) 18 = PICK-UP “M”
(*) 30 = PICK-UP “L”
PICK-UP “M”
1
4
10
7
9
8
PICK-UP “L”
2
29
28
27
26
9
8

ASPO
PICK-UP SHAFT

TAV_159

Pos.	Cod.	Descrizione	Description	Description	Benennung	Descripcion
1	B07SP0288	CORPO ASPO M	AUGER BODY	CORPS ENROULEUR	KOERPER ASPO M	
2	B07SP0195	CORPO ASPO L LT	REEL BODY	CORPS ENROULEUR LT	KOERPER ASPO L LT	
3	B0C001521	CAVALLOTTO	U BOLT	BOULON	BUEGELBOLZEN	
4	B025P0010	SEMIBUSSOLA PER ASPO PICK-UP	HALF-BUSHFOR ASPO PICK-UP	SEMI-PALIER SPECIAL	HALBLAGERBUCHSE	
5	B00181025	VITE M10X1,5 X 25 U5739 8.8ZN	SCREW	VIS	SCHRAUBE	
6	B008B0310	DADO M10X 1,5 D980 8 ZN	NUT	ECROU	SELBSTSICHERNDE MUTTER M10 KL8	
7	B02353030	SUPPORTO FLANGIATO TONDO 30LAM	BEARING FLANGED SUPPORT 30	SUPPORT FLANGE	FLANSCHLAGER	
8	B00181020	VITE M10X1,5 X 20 U5739 8.8ZN	SCREW	VIS	SCHRAUBE	
9	B01421025	ROS.M10 10,5X 18X 2 U6592 ZN	WASHER	RONDELLE	SCHEIBE	
10	B01110645	SPINA ELAST. 6X 45 SS DIN 1481	PIN	GOUPILLE	STIFT	
11	B07S01561	CAMME PICK UP	NEW PICK-UP ECCENTRIC	CAME PU NEW	NEUE PICK-UP EXZENTER NOCKEN	
12	B02353030	SUPPORTO FLANGIATO TONDO 30LAM	BEARING FLANGED SUPPORT 30	SUPPORT FLANGE	FLANSCHLAGER	
13	B00181020	VITE M10X1,5 X 20 U5739 8.8ZN	SCREW	VIS	SCHRAUBE	
14	B01421025	ROS.M10 10,5X 18X 2 U6592 ZN	WASHER	RONDELLE	SCHEIBE	
15	B00181225	VITE M12X1,75X 25 U5739 8.8ZN	SCREW	VIS	SCHRAUBE	
16	B01523831	RALLA 12 33 5	FIFTH WHEEL	BUTEE	UMBORDELUNG 12 33 5	
17	B01110645	SPINA ELAST. 6X 45 SS DIN 1481	PIN	GOUPILLE	STIFT	
18	B7S00991L	BARRA PORTADENTI 200	BAR PORTADENTI 200			
19	B020R1210	ROTEL.SKF 361201 R PICK-UP LEG	ROLLER SKF 361201 R PU BINDER	GALET	LAGER SKF 361201 R	
20	B01700012	ANEL. D ARR. ALB. 12-E UNI3653	SEEGER RING	BAGUE SEEGER	SEEGERRING 12-E	
21	B018P0003	DENTE RACCOGLITORE PICK-UP	TOOTH COLLECTING PU	DENT PICK-UP	PICK-UP ZINKEN	
22	B0C000214	PIASTRA SOSTEGNO MOLLA	SPRING SUPPORTING PLATE	PLAQUE SUPPORT RESSORT	FEDER STUETZPLATTE	
23	B00170850	VITE M8X1,25X 50 U5737 10.9ZD	SCREW	VIS	SCHRAUBE	
24	B01430820	ROS.M8 8,4X 24X 2 U6593 ZN	WASHER	RONDELLE	SCHEIBE	
25	B00910208	DADO M 8X 1 D982 CL.8	NUT	ECROU	SELBSTSICHERNDE MUTTER M8-8G	
26	B02353035	SUPPORTO FLANG.TONDO 35 LAMIER	BEARING FLANGED SUPPORT D.35	SUPPORT FLANGE	FLANSCHLAGER	
27	B01301126	SPES.	SHIM	ENTRETOISE	DICHTUNG	
28	F02100124	SPINA E.P. 3X 12 U6873 C70 BR	PIN EL. 6X50 U6873 C70 BR	GOUJON 6X50 U6873 C70 BR	STIFT 6X50 U6873 C70 BR	ESPINA 6X50 U6873 C70 BR
29	B025P0010	SEMIBUSSOLA PER ASPO PICK-UP	HALF-BUSHFOR ASPO PICK-UP	SEMI-PALIER SPECIAL	HALBLAGERBUCHSE	
30	B07S01225	BARRA PORTADENTI 200	TINES-HOLDER BAR 200	BARRE PORTE-DENTS 200	ZINKENTRAGERSTANGE	

TAV_170

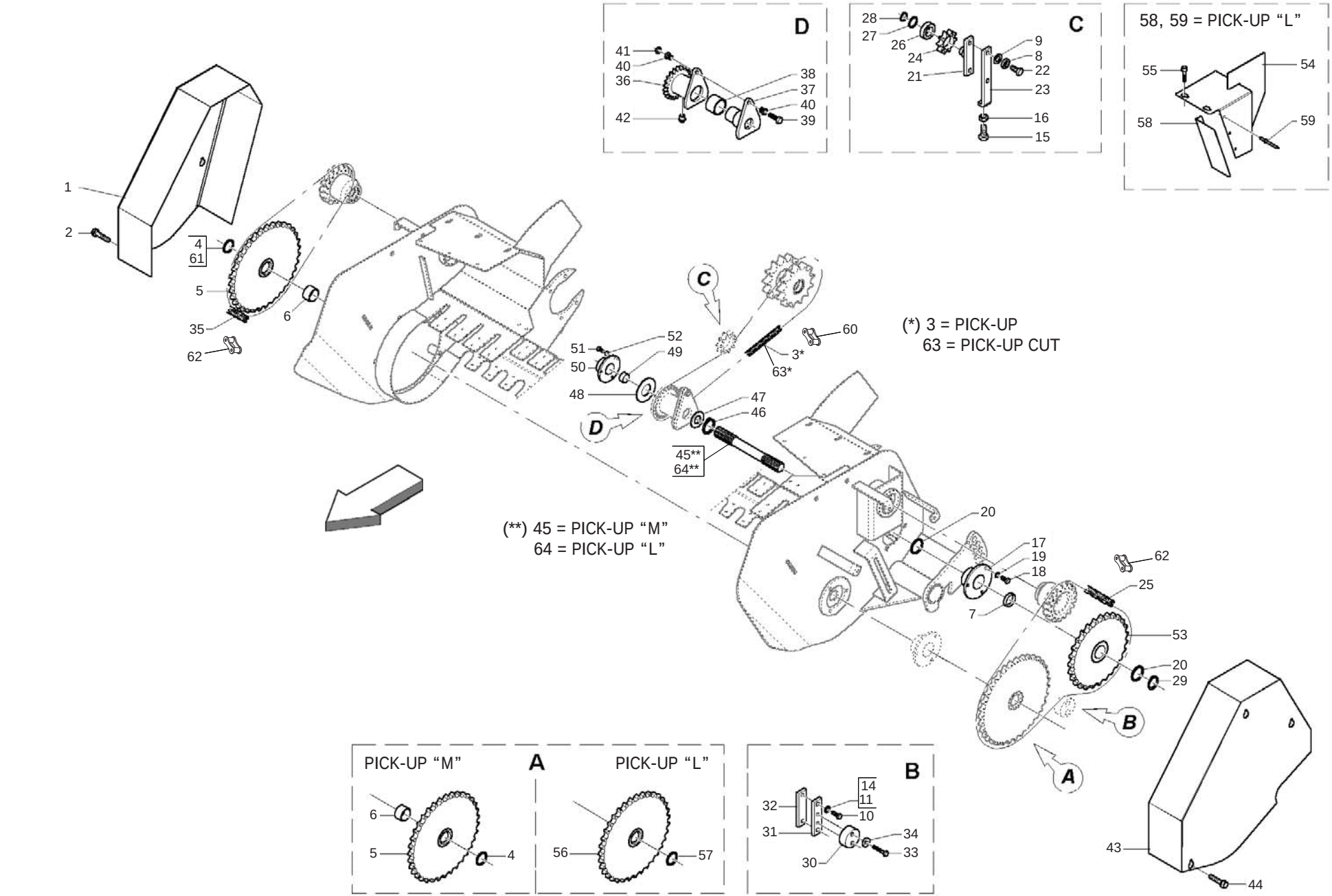

MASCHIO

cod. B0D5P0108

TRASMISSIONE PICK-UP
PICK-UP TRANSMISSION

TAV_170

Pos.	Cod.	Descrizione	Description	Description	Benennung	Descripcion
1	B07SP0198	CARTER DX PICK UP	SEE 7MP0125	CARTER DROIT PU LT	SIEHE 7MP0125	
2	B00370001	VITE TE M 8X16 A SEZ.TRILOBATA	SCREW TRE M 8X16 SEZ TROUBLED	VIS	SCHRAUBE M 8X15	
3	B030E1026	CATENA RULLI ISO 16 B-1 26M	ROLLER CHAIN ISO16 B-1 26M	CHAINE ROULEAUX	WALZENKETTE	
4	B01300100	SPES. 30,3 40 0,5 ZINCATO	SHIM GALV	ENTRETOISE GALV	DISTANZSTUECK 30,3 40 0,5	
5	B034P0002	ING. Z=35; 3 4; ISO 12B-1	GEAR Z=35; 3 4; ISO 12B-1	ENGRANAGE	ZAHNRAD	
6	B013P0039	DISTANZIALE 30,5X42,4X15	SPACER	ENTRETOISE	DISTANZSTUECK	
7	B013P0040	DISTANZIALE 35,5X42,4X15	SPACER	ENTRETOISE	DISTANSTUECK	
8	B01516038	RALLA 13 32 5	FIFTH WHEEL	BUTEE	SCHEIBE	
9	F01420120	ROS.M12 13X 36X2,5 U6593 ZN	WASHER	RONDELLE	SCHEIBE	
10	F01020512	VITE M12X1,75X35 U5739 8.8ZN	SCR. M12X1,75X35 U5739 8.8ZN	VIS M12X1,75X35 5739 8.8 ZN	SCHR. M12X1,75X35 5739 8.8 ZN	TORN. M12X1,75X35 5739 8.8 ZN
11	F01410076	ROS.M12 13X 20X2,0 U1749 ZN	WASHER	RONDELLE	SCHEIBE	
14	B01523831	RALLA 12 33 5	FIFTH WHEEL	BUTEE	UMBORDELUNG 12 33 5	
15	F01020519	VITE M12X1,75X 60 U5739 8.8ZN	SCREW M12X1,75X 60 U5739 8.8ZN			
16	F01200293	DADO M12X1,75 U5588 6.8 ZN	NUT	ECROU	MUTTER M12-6S	
17	B02353035	SUPPORTO FLANG.TONDO 35 LAMIER	BEARING FLANGED SUPPORT D.35	SUPPORT FLANGE	FLANSCHLAGER	
18	F01020470	VITE M10X1,5X20 U5739 8.8ZN	SCR. M10X1,5X20 U5739 8.8ZN	VIS M10X1,5X20 U5739 8.8 ZN	SCHRAUBE M10X1,5X20 U5739 ZN	TORNILLOM10X1,5X20 U5739 8.8ZN
19	F01410062	ROS.M10 10,5X 18X 2 U6592 ZN	WASHER M10 10,5X 18X 2 U6592	RONDELLE M10 10,5X18X2 ZN	DICHTUNGSRING M10 10,5X18X2 ZN	RONDANA M10 10,5X18X2 ZN
20	B01534416	SPES. 35 43 1 ZINCATO	SHIM	ENTRETOISE	AUSGLEICHSCHEIBE 35X43X1	
21	B07S01013	TENDITORE PU	PICK-UP TENSIONER	TENDEUR PU	PICK-UP SPANNER	
22	F01020510	VITE M12X1,75X30 U5739 8.8ZN	SCR. M12X1,75X30 U5739 8.8ZN	VIS M12X1,75X30 U5739 8.8ZN	SCHRAU.M12X1,75X30 U5739 8.8ZN	TORN. M12X1,75X30 U5739 8.8ZN
23	B0C6P0065	TIRANTE INFALDATORE	FEEDER TIE ROD	TIRANT AMENEUR	ZUGSTAB RAFFER	
24	B03400274	CORONA Z10-1 ISO F52 TRATT	SPROCKET Z=10-1	ENGRANAGE SPECIAL TRAITE	ZAHNKRANZ Z=10-1	
25	B03111063	CAT RULLI ASA 60-1 63 MGL ISO	ROLLER CHAIN	CHAINE ROULEAUX	KETTE DER WALZEN	
26	F04010170	CUSC.D25 D52 B15 6205 2RS EX	BEARING D25 D52 B15 6205 2RS	ROULEMENT 6205 2RS	LAGER 6205 2RS	COJINETE 6205 2RS
27	B01300104	SPES. 25,5 37 0,2	SHIM	ENTRETOISE	BEILAGSCHEIBE 25,5 37 0,2	
28	F02050101	ANEL. D ARR. ALB. 25-E UNI3653	SEEGER RING	BAGUE SEEGER	SEEGERRING 25-E	
29	B01700035	ANEL. D ARR. ALB. 35-E UNI3653	SEEGER RING	BAGUE SEEGER	SEEGERRING 35-E	
30	B07VP0513	TENDICATENA IN NYLON	NYLON CHAIN TIGHTENER			
31	BC6P0273L	ATTACCO GALOPPINO	ATTACK GALOPPINO			
32	BC6P0275L	PIASTRA ATTACCO GALOPPINO	PLATE ATTACK GALOPPINO			
33	F01020158	VITE M12X1,75X55 U5737 8.8ZN	BOLT M12X1,75X55 U5737 8.8ZN	VIS M12X1,75X55 U5737 8.8 ZN	SCHR. M12X1,75X55 U5737 8.8 ZN	TORN. M12X1,75X55 U5737 8.8 ZN
34	B01523831	RALLA 12 33 5	FIFTH WHEEL	BUTEE	UMBORDELUNG 12 33 5	
35	B03111046	CATENA RULLI ASA 60-1 46 MGL	ROLLER CHAIN ASA60-1 46 MGL	CHAINE ROULEAUX	KETTE DER WALZEN	
36	B03400241	MOZZO DI SICUREZZA PICK-UP	SURETY HUB	MOYEU DE SURETE	SICHERHEIT NABE	
37	B07S01001	MOZZO CALETTATO	SPLINED HUB	MOYEU	VERZAHNTE NABE	
38	B02500001	BRONZINA SICUREZZA PICK-UP	BUSHING	COUSSINET	LAGERBUCHSE	
39	B00170845	VITE ZINCATA M 8X45-10.9 U5737	ZN SCREW M 8X45-10.9 U5737	VIS	SCHRAUBE	
40	B00511057	BUSSOLA DI TRANCIAMENTO INFALD	BUSHING	BAGUE	BUCHSE	
41	B008B0208	DADO M 8X1,25 D980 8 ZN	NUT	ECROU	SELBSTSICHERNDE MUTTER M8 KL8	
42	B04200610	INGRASS.A SFERE M6X1 LUNGO	GREASE NIPPLE	GRAISSEUR HYDRAULIQUE	GERADER SCHMIERNIPPEL M6X1	
43	B07SP0199	CARTER SX PICK UP	SEE 7MP0126	CARTER GAUCHE PU LT	SIEHE ZMP0126	
44	B00370001	VITE TE M 8X16 A SEZ.TRILOBATA	SCREW TRE M 8X16 SEZ TROUBLED	VIS	SCHRAUBE M 8X15	
45	B035P0010	CONTRALBERO CORTO PU M LT	COUNTERSHAFT	CONTREARBRE COURT PU M LT	GEGENWELLE	
46	B01700040	ANEL. D ARR. ALBERO 40-E UNI 3	SEEGER RING	BAGUE SEEGER	SEEGERRING 40-E	
47	B01300126	SPES. 40 48 1 ZINC.ST_013	SHIM	ENTRETOISE	DISTANZSTUECK 40 408 1	
48	B01534395	RALLA 35.5X 62 X 3 ZINCATO	FIFTH WHEEL	BUTEE	SPEZIALSCHEIBE	
49	B01300607	DISTANZIALE 35X42X35	SPACER	ENTRETOISE	DISTANZSTUECK 35X42X35	
50	B02353035	SUPPORTO FLANG.TONDO 35 LAMIER	BEARING FLANGED SUPPORT D.35	SUPPORT FLANGE	FLANSCHLAGER	
51	F01020470	VITE M10X1,5X20 U5739 8.8ZN	SCR. M10X1,5X20 U5739 8.8ZN	VIS M10X1,5X20 U5739 8.8 ZN	SCHRAUBE M10X1,5X20 U5739 ZN	TORNILLOM10X1,5X20 U5739 8.8ZN
52	F01410062	ROS.M10 10,5X 18X 2 U6592 ZN	WASHER M10 10,5X 18X 2 U6592	RONDELLE M10 10,5X18X2 ZN	DICHTUNGSRING M10 10,5X18X2 ZN	RONDANA M10 10,5X18X2 ZN
53	B034P0004	INGR.Z=27-3 4 ISO CON MOZZO	GEAR	ENGRANAGE	ZAHNRAD MIT RADACHSE	
54	B0C005269	CARTER SICUREZZA NEW	NEW SAFETY GUARD	CARTER DE SURETE NEW	CARTER SICHERHEITS NEW	
55	B00370001	VITE TE M 8X16 A SEZ.TRILOBATA	SCREW TRE M 8X16 SEZ TROUBLED	VIS	SCHRAUBE M 8X15	
56	B034P0041	INGR. Z=35; 3 4; ISO 12B-1	GEAR	ENGRANAGE	ZAHNRAD Z=35-3 4	
57	B01534416	SPES. 35 43 1 ZINCATO	SHIM	ENTRETOISE	AUSGLEICHSCHEIBE 35X43X1	
58	B0C005384	PROLUNGA CARTER SICUREZZA PUL	SAFETY GUARD EXTENSION	RALLONGE CARTER SURETE	VERLAENGERUNG CARTER	
59	F02250111	RIVETTO STR. 4X 6 U9200A AL	RIVET	RIVET	ABREISSNIETEN 4X8	

TAV_170

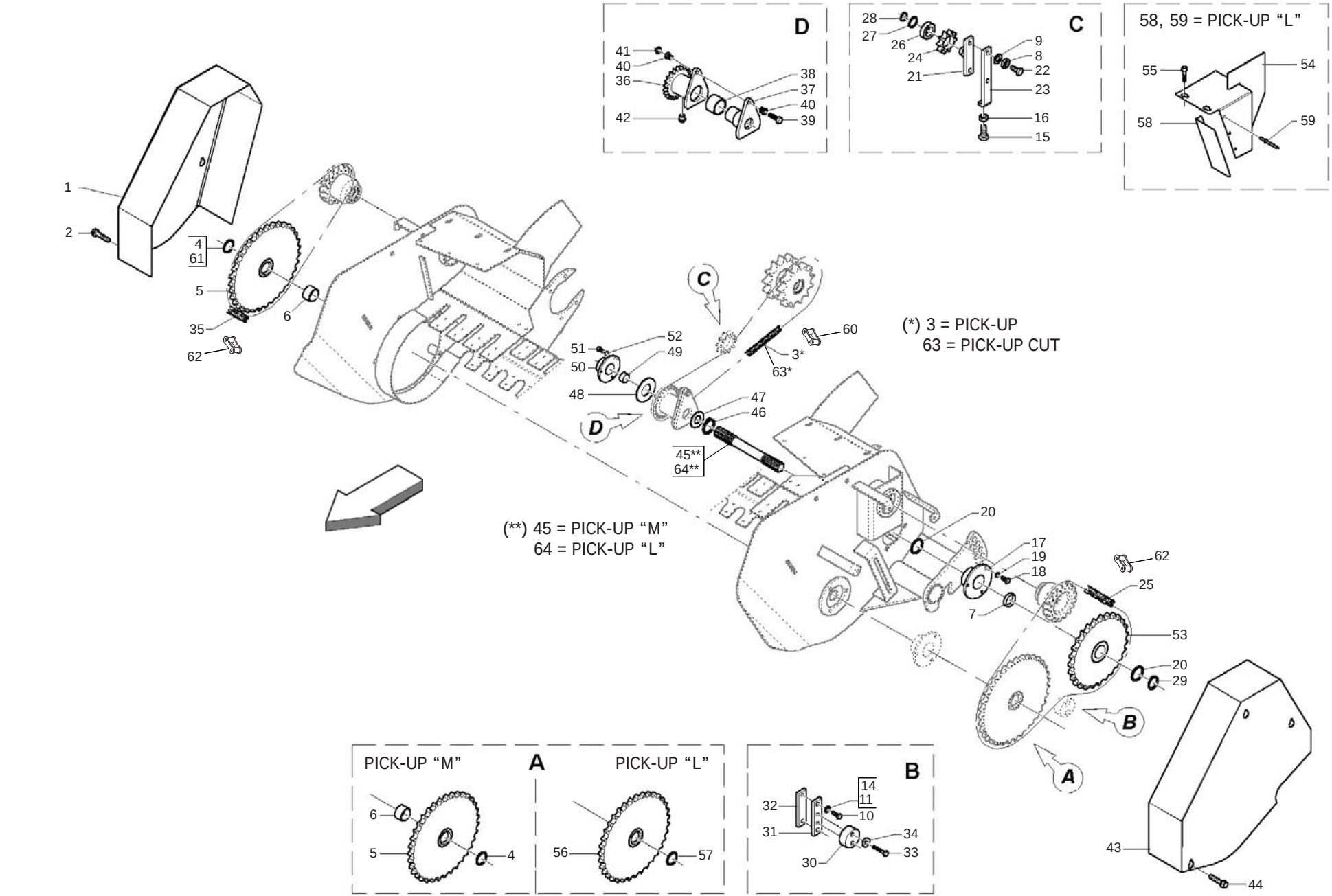

MASCHIO

cod. B0D5P0108

TRASMISSIONE PICK-UP
PICK-UP TRANSMISSION

TAV_170

Pos.	Cod.	Descrizione	Description	Description	Benennung	Descripcion
60	B030E0017	GIUNTO MOLL N26 ISO 16 B-1	SPRING JOINT N.26 ISO 16 B-1	JOINT RESSORT	KETTENFEDER	
61	B01300101	SPES. 30,3 40 1 ZINCATO	SHIM GALV	ENTRETOISE GALV	DISTANZSTUECK 30,3 40 1	
62	B03110007	GIUNTO MOLL. N. 26 ASA 60-1	SPRING JOINT N. 26 ASA 60-1	JOINT	KETTENSCHLOSS	
63	B030E1052	CATENA RULLI ISO 16 B-1 52M	ROLLER CHAIN	CHAINE ROULEAUX	WALZENKETTE	
64	B035P0058	CONTRALBERO CORTO PU L LT	COUNTERSHAFT	CONTRE ARBRE	KURZE GEGENWELLE	

TAV_180

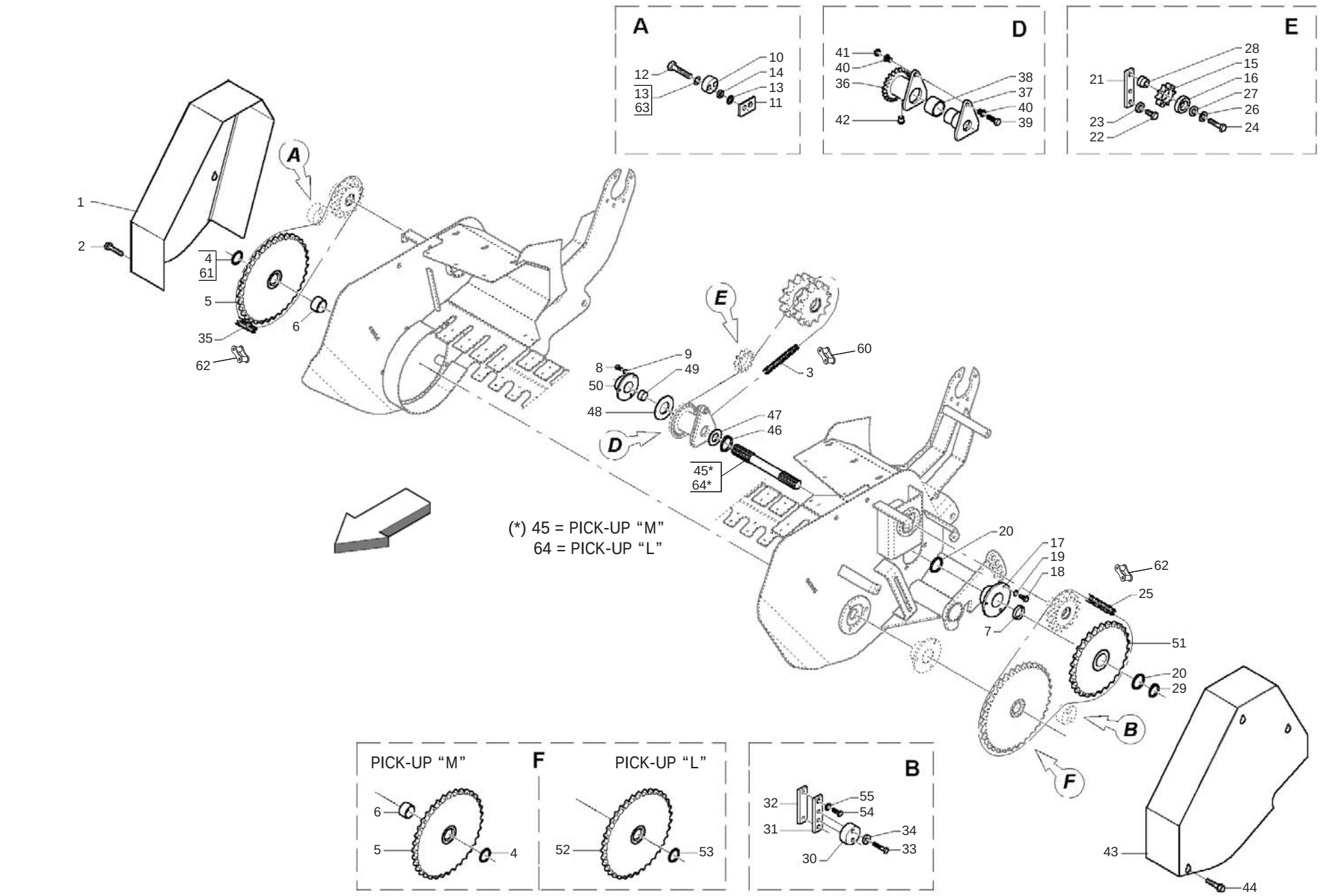

MASCHIO

cod. B0D5P0108

TRASMISSIONE PICK-UP CUT
PICK-UP CUT TRANSMISSION

TAV_180

Pos.	Cod.	Descrizione	Description	Description	Benennung	Descripcion
1	B07SP0198	CARTER DX PICK UP	SEE 7MP0125	CARTER DROIT PU LT	SIEHE 7MP0125	
2	B00370001	VITE TE M 8X16 A SEZ.TRILOBATA	SCREW TRE M 8X16 SEZ TROUBLED	VIS	SCHRAUBE M 8X15	
3	B030E1052	CATENA RULLI ISO 16 B-1 52M	ROLLER CHAIN	CHAINE ROULEAUX	WALZENKETTE	
4	B01300100	SPES. 30,3 40 0,5 ZINCATO	SHIM GALV	ENTRETOISE GALV	DISTANZSTUECK 30,3 40 0,5	
5	B034P0002	ING. Z=35; 3 4; ISO 12B-1	GEAR Z=35; 3 4; ISO 12B-1	ENGRANAGE	ZAHNRAD	
6	B013P0039	DISTANZIALE 30,5X42,4X15	SPACER	ENTRETOISE	DISTANZSTUECK	
7	B013P0040	DISTANZIALE 35,5X42,4X15	SPACER	ENTRETOISE	DISTANSTUECK	
8	F01020470	VITE M10X1,5X20 U5739 8.8ZN	SCR. M10X1,5X20 U5739 8.8ZN	VIS M10X1,5X20 U5739 8.8 ZN	SCHRAUBE M10X1,5X20 U5739 ZN	TORNILLOM10X1,5X20 U5739 8.8ZN
9	F01410062	ROS.M10 10,5X 18X 2 U6592 ZN	WASHER M10 10,5X 18X 2 U6592	RONDELLE M10 10,5X18X2 ZN	DICHTUNGSRING M10 10,5X18X2 ZN	RONDANA M10 10,5X18X2 ZN
10	B07VP0513	TENDICATENA IN NYLON	NYLON CHAIN TIGHTENER			
11	B0C003172	ATTACCO TENDICATENA	CHAIN TIGHTENER COUPLING	ATTELAGE TENDEUR DE CHAINE	KETTENSPANNER BEFESTIGUNG	
12	F01020164	VITE M12X1,75X70 U5737 8.8ZN	SCREW M12X1,75X70 U5737 8.8ZN	VIS M12X1,75X70 U5737 8.8 ZN	SCHR. M12X1,75X70 U5737 8.8 ZN	TORN. M12X1,75X70 U5737 8.8 ZN
13	F01420120	ROS.M12 13X 36X2,5 U6593 ZN	WASHER	RONDELLE	SCHEIBE	
14	B01523831	RALLA 12 33 5	FIFTH WHEEL	BUTEE	UMBORDELUNG 12 33 5	
15	B03400274	CORONA Z10-1 ISO F52 TRATT	SPROCKET Z=10-1	ENGRANAGE SPECIAL TRAITE	ZAHNKRANZ Z=10-1	
16	F04010170	CUSC.D25 D52 B15 6205 2RS EX	BEARING D25 D52 B15 6205 2RS	ROULEMENT 6205 2RS	LAGER 6205 2RS	COJINETE 6205 2RS
17	B02353035	SUPPORTO FLANG.TONDO 35 LAMIER	BEARING FLANGED SUPPORT D.35	SUPPORT FLANGE	FLANSCHLAGER	
18	F01020470	VITE M10X1,5X20 U5739 8.8ZN	SCR. M10X1,5X20 U5739 8.8ZN	VIS M10X1,5X20 U5739 8.8 ZN	SCHRAUBE M10X1,5X20 U5739 ZN	TORNILLOM10X1,5X20 U5739 8.8ZN
19	F01410062	ROS.M10 10,5X 18X 2 U6592 ZN	WASHER M10 10,5X 18X 2 U6592	RONDELLE M10 10,5X18X2 ZN	DICHTUNGSRING M10 10,5X18X2 ZN	RONDANA M10 10,5X18X2 ZN
20	B01534416	SPES. 35 43 1 ZINCATO	SHIM	ENTRETOISE	AUSGLEICHSCHEIBE 35X43X1	
21	B0C002390	FERMO	LOCK	ARRET	ARRETIERUNG	
22	F01020510	VITE M12X1,75X30 U5739 8.8ZN	SCR. M12X1,75X30 U5739 8.8ZN	VIS M12X1,75X30 U5739 8.8ZN	SCHRAU.M12X1,75X30 U5739 8.8ZN	TORN. M12X1,75X30 U5739 8.8ZN
23	B01518412	RALLA 12 38 5	FIFTH WHEEL	BUTEE	SCHEIBE	
24	F01020160	VITE M12X1,75X60 U5737 8.8ZN	SCR. M12X1,75X60 U5737 8.8ZN	VIS M12X1,75X60 U5737 8.8 ZN	SCHRA.M12X1,75X60 U5737 8.8 ZN	TORN. M12X1,75X60 U5737 8.8 ZN
25	B03111069	CAT RULLI ASA 60-1 69 MGL ISO	CHAIN	CHAINE ROULEAU ASA 60-1	KETTE	
26	F01420120	ROS.M12 13X 36X2,5 U6593 ZN	WASHER	RONDELLE	SCHEIBE	
27	B01518412	RALLA 12 38 5	FIFTH WHEEL	BUTEE	SCHEIBE	
28	B01300302	PERNO GALOPPINO	PIN	TOURILLON	BOLZEN FUER KETTENZAHNRAD	
29	B01700035	ANEL. D ARR. ALB. 35-E UNI3653	SEEGER RING	BAGUE SEEGER	SEEGERRING 35-E	
30	B07VP0513	TENDICATENA IN NYLON	NYLON CHAIN TIGHTENER			
31	BC6P0273L	ATTACCO GALOPPINO	ATTACK GALOPPINO			
32	BC6P0275L	PIASTRA ATTACCO GALOPPINO	PLATE ATTACK GALOPPINO			
33	F01020158	VITE M12X1,75X55 U5737 8.8ZN	BOLT M12X1,75X55 U5737 8.8ZN	VIS M12X1,75X55 U5737 8.8 ZN	SCHR. M12X1,75X55 U5737 8.8 ZN	TORN. M12X1,75X55 U5737 8.8 ZN
34	B01523831	RALLA 12 33 5	FIFTH WHEEL	BUTEE	UMBORDELUNG 12 33 5	
35	B03111058	CATENA RULLI ASA60-1 58M	ROLLER CHAIN ASA60-1 58M	CHAINE ROULEAUX ASA60-1		
36	B03400241	MOZZO DI SICUREZZA PICK-UP	SURETY HUB	MOYEU DE SURETE	SICHERHEIT NABE	
37	B07S01001	MOZZO CALETTATO	SPLINED HUB	MOYEU	VERZAHNTE NABE	
38	B02500001	BRONZINA SICUREZZA PICK-UP	BUSHING	COUSSINET	LAGERBUCHSE	
39	B00170845	VITE ZINCATA M 8X45-10.9 U5737	ZN SCREW M 8X45-10.9 U5737	VIS	SCHRAUBE	
40	B00511057	BUSSOLA DI TRANCIAMENTO INFALD	BUSHING	BAGUE	BUCHSE	
41	B008B0208	DADO M 8X1,25 D980 8 ZN	NUT	ECROU	SELBSTSICHERNDE MUTTER M8 KL8	
42	B04200610	INGRASS.A SFERE M6X1 LUNGO	GREASE NIPPLE	GRAISSEUR HYDRAULIQUE	GERADER SCHMIERNIPPEL M6X1	
43	B07SP0199	CARTER SX PICK UP	SEE 7MP0126	CARTER GAUCHE PU LT	SIEHE ZMP0126	
44	B00370001	VITE TE M 8X16 A SEZ.TRILOBATA	SCREW TRE M 8X16 SEZ TROUBLED	VIS	SCHRAUBE M 8X15	
45	B035P0010	CONTRALBERO CORTO PU M LT	COUNTERSHAFT	CONTREARBRE COURT PU M LT	GEGENWELLE	
46	B01700040	ANEL. D ARR. ALBERO 40-E UNI 3	SEEGER RING	BAGUE SEEGER	SEEGERRING 40-E	
47	B01300126	SPES. 40 48 1 ZINC.ST_013	SHIM	ENTRETOISE	DISTANZSTUECK 40 408 1	
48	B01534395	RALLA 35.5X 62 X 3 ZINCATO	FIFTH WHEEL	BUTEE	SPEZIALSCHEIBE	
49	B01300607	DISTANZIALE 35X42X35	SPACER	ENTRETOISE	DISTANZSTUECK 35X42X35	
50	B02353035	SUPPORTO FLANG.TONDO 35 LAMIER	BEARING FLANGED SUPPORT D.35	SUPPORT FLANGE	FLANSCHLAGER	
51	B034P0004	INGR.Z=27-3 4 ISO CON MOZZO	GEAR	ENGRANAGE	ZAHNRAD MIT RADACHSE	
52	B034P0041	INGR. Z=35; 3 4; ISO 12B-1	GEAR	ENGRANAGE	ZAHNRAD Z=35-3 4	
53	B01534416	SPES. 35 43 1 ZINCATO	SHIM	ENTRETOISE	AUSGLEICHSCHEIBE 35X43X1	
54	F01020512	VITE M12X1,75X35 U5739 8.8ZN	SCR. M12X1,75X35 U5739 8.8ZN	VIS M12X1,75X35 5739 8.8 ZN	SCHR. M12X1,75X35 5739 8.8 ZN	TORN. M12X1,75X35 5739 8.8 ZN
55	F01410062	ROS.M10 10,5X 18X 2 U6592 ZN	WASHER M10 10,5X 18X 2 U6592	RONDELLE M10 10,5X18X2 ZN	DICHTUNGSRING M10 10,5X18X2 ZN	RONDANA M10 10,5X18X2 ZN
60	B030E0017	GIUNTO MOLL N26 ISO 16 B-1	SPRING JOINT N.26 ISO 16 B-1	JOINT RESSORT	KETTENFEDER	
61	B01300101	SPES. 30,3 40 1 ZINCATO	SHIM GALV	ENTRETOISE GALV	DISTANZSTUECK 30,3 40 1	

TAV_180

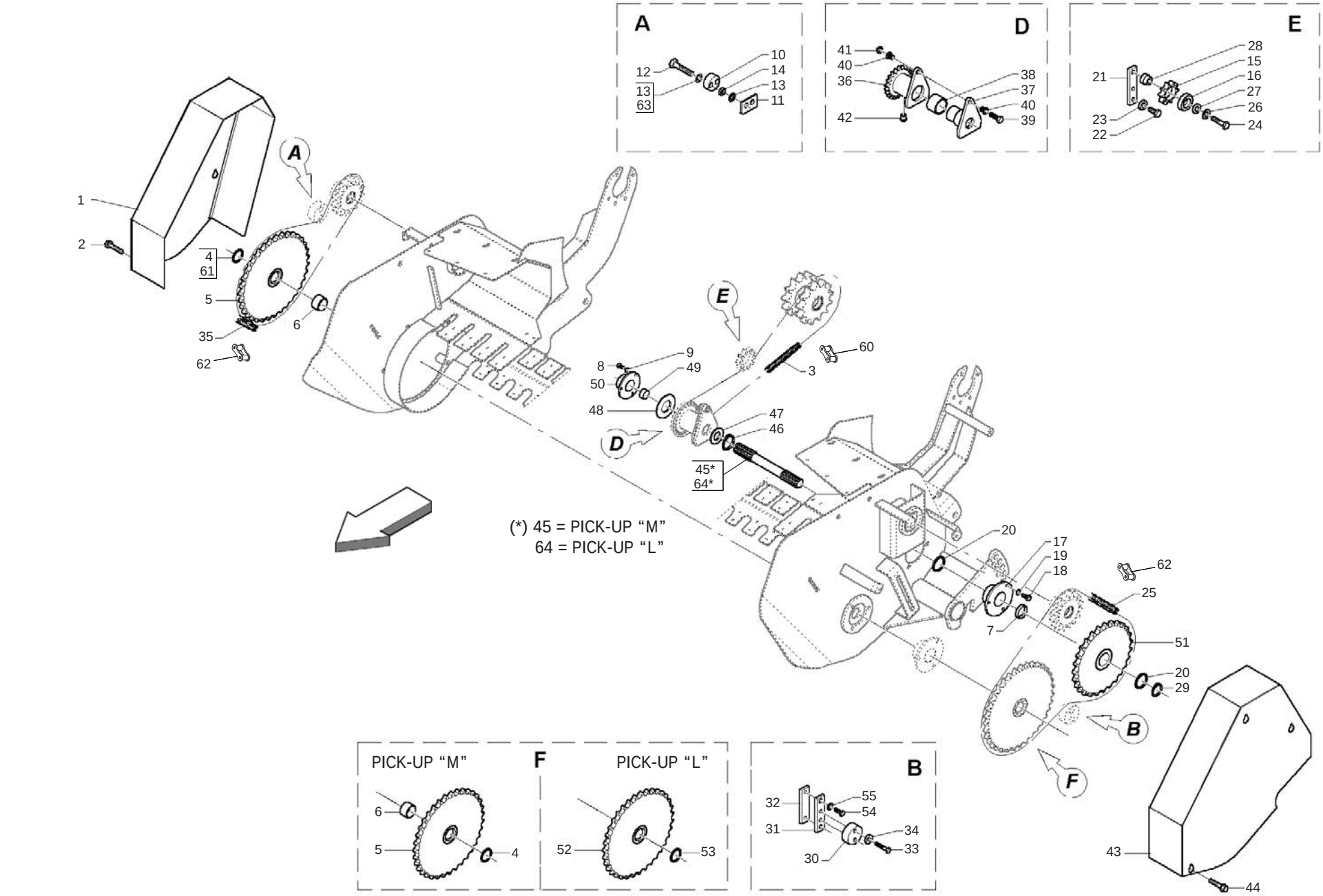

MASCHIO

cod. B0D5P0108

TRASMISSIONE PICK-UP CUT
PICK-UP CUT TRANSMISSION

TAV_180

Pos.	Cod.	Descrizione	Description	Description	Benennung	Descripcion
62	B03110007	GIUNTO MOLL. N. 26 ASA 60-1	SPRING JOINT N. 26 ASA 60-1	JOINT	KETTENSCHLOSS	
63	F01410076	ROS.M12 13X 20X2,0 U1749 ZN	WASHER	RONDELLE	SCHEIBE	
64	B035P0058	CONTRALBERO CORTO PU L LT	COUNTERSHAFT	CONTRE ARBRE	KURZE GEGENWELLE	

TAV_190

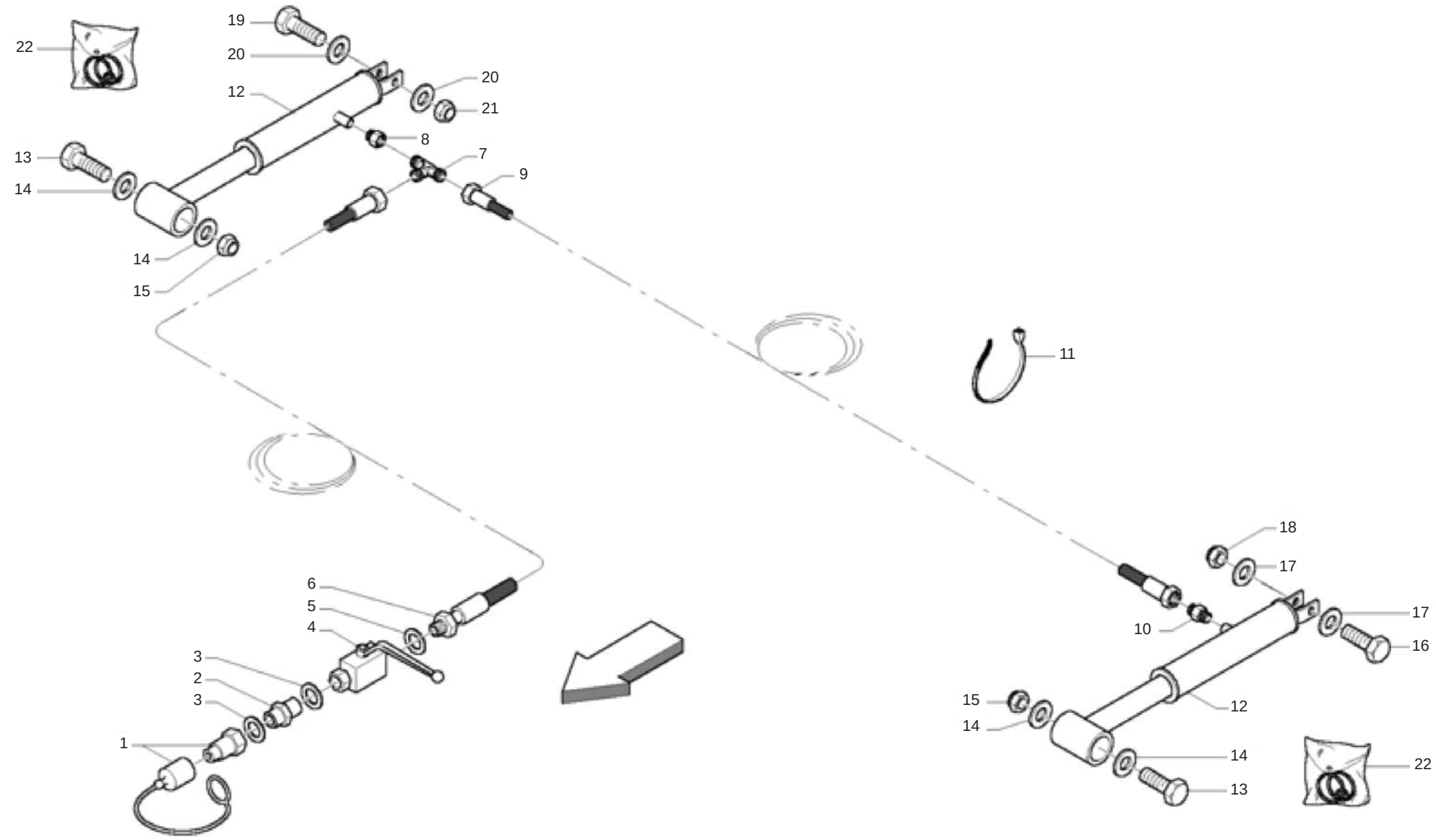
22
19
20
12
20
21
8
13
7
14
9
14
15
11
18
17
6
5
4
17
10
16
3
2
3
15
12
1
14
14
22
13

IMPIANTO IDRAULICO PICK-UP
PICK-UP HYDRAULIC SYSTEM

TAV_190

Pos.	Cod.	Descrizione	Description	Description	Benennung	Descripcion
1	B0H6000A0	INNESTO RAP.NV 12GAS-M	QUICK CLUTCH	EMBRAYAGE	SCHNELLKUPPLUNG	
2	B0H733671	NIPPLO RID.FORO 1MM. 1 2 -1 4	NIPPLE 1 2 -1 4	NIPPLE 1 MM 1 2 -1 4	NIPPEL 1 2 -1 4	
3	B01441415	RONDELLA IN RAME 1 4	WASHER	RONDELLE	BEILAGSCHEIBE 1 4 13X19X1,5	
4	B0H000119	RUBIN. A SFER.A.P.1 4 FEMM.-F	BALL COCK	ROBINET 1 4 FEMELLE	KUGELHAHN	
5	B01442015	ROS. 21 X27X1,5 RAME -1 2	WASHER	RONDELLE	BEILAGSCHEIBE 1 2	
6	B0H000250	TUBO IDRAUL.	HYDRAULIC HOSE	TUYAU HYDRAULIQUE	HYDRAULIKSCHLAUCH	
7	B0H000098	RACCORDO T 10 TN 127-10LR	UNION T 10	RACCORD T 10	T.VERSCHRAUBUNG	
8	B0H000265	RID. RASTELLI TN143-3 8 X1 4 R	REDUCTION TN143-3 8 X1 4 R	REDUCTION TN 143-3 8 X1 4 R	REDUKTION TN 143-3 8	
9	B0H000251	TUBO IDRAUL.	HYDRAULIC HOSE	TUYAU HYDRAULIQUE	HYDRAULIKSCHLAUCH	
10	B0H000139	RACCORDO I 10 RASTELLI	UNION I 10	RACCORD I SEULEMENT CORPS	VERBINDUNGSTUECK I 10	
11	F05150055	FASCETTA LUMEFIX 3,6X180	CLAMP LUMEFIX	BANDE LUMEFIX	MANSCHETTE LUMEFIX	
12	B0H400062	MARTINETTO PICK-UP	SPRINTER PICK-UP JACK	VERIN PICK-UP SPRINTER	SPRINTER PICK-UP ZYLINDER	
13	F01020976	VITE M16X 2X55 U5737 8.8 ZN	SCREW M16X 2X55 U5737 8.8 ZN			
14	F01410100	ROS.M16 17X 30X 3 U6592 ZN	WASHER	RONDELLE	SCHEIBE	
15	B00920516	DADO M16X 1,5 D985 6S ZN	NUT M16X1,5 D985 6S ZN	ECROU	SELBSTSICHERNDE MUTTER M16-5S	
16	F01020264	VITE M16X2X90 U5737 8.8ZN	SCR. M16X2X90 U5737 8.8ZN	VIS M16X2X90 5737 8.8 ZN	SCHRAUBE M16X2X90 5737 8.8 ZN	TORN. M16X2X90 5737 8.8 ZN
17	F01410100	ROS.M16 17X 30X 3 U6592 ZN	WASHER	RONDELLE	SCHEIBE	
18	B00920516	DADO M16X 1,5 D985 6S ZN	NUT M16X1,5 D985 6S ZN	ECROU	SELBSTSICHERNDE MUTTER M16-5S	
19	B00191680	VITE M16X 2X 80 U5737 8.8ZN	SCREW	VIS	SCHRAUBE	
20	F01410100	ROS.M16 17X 30X 3 U6592 ZN	WASHER	RONDELLE	SCHEIBE	
21	B00920516	DADO M16X 1,5 D985 6S ZN	NUT M16X1,5 D985 6S ZN	ECROU	SELBSTSICHERNDE MUTTER M16-5S	
22	B0H400061	KIT GUARNIZ. MARTIN. B0H400021	KIT JOINTS FOR H400021	KIT JOINTS POUR VERIN	DICHTUNGSSATZ FUER H400021	

TAV_195

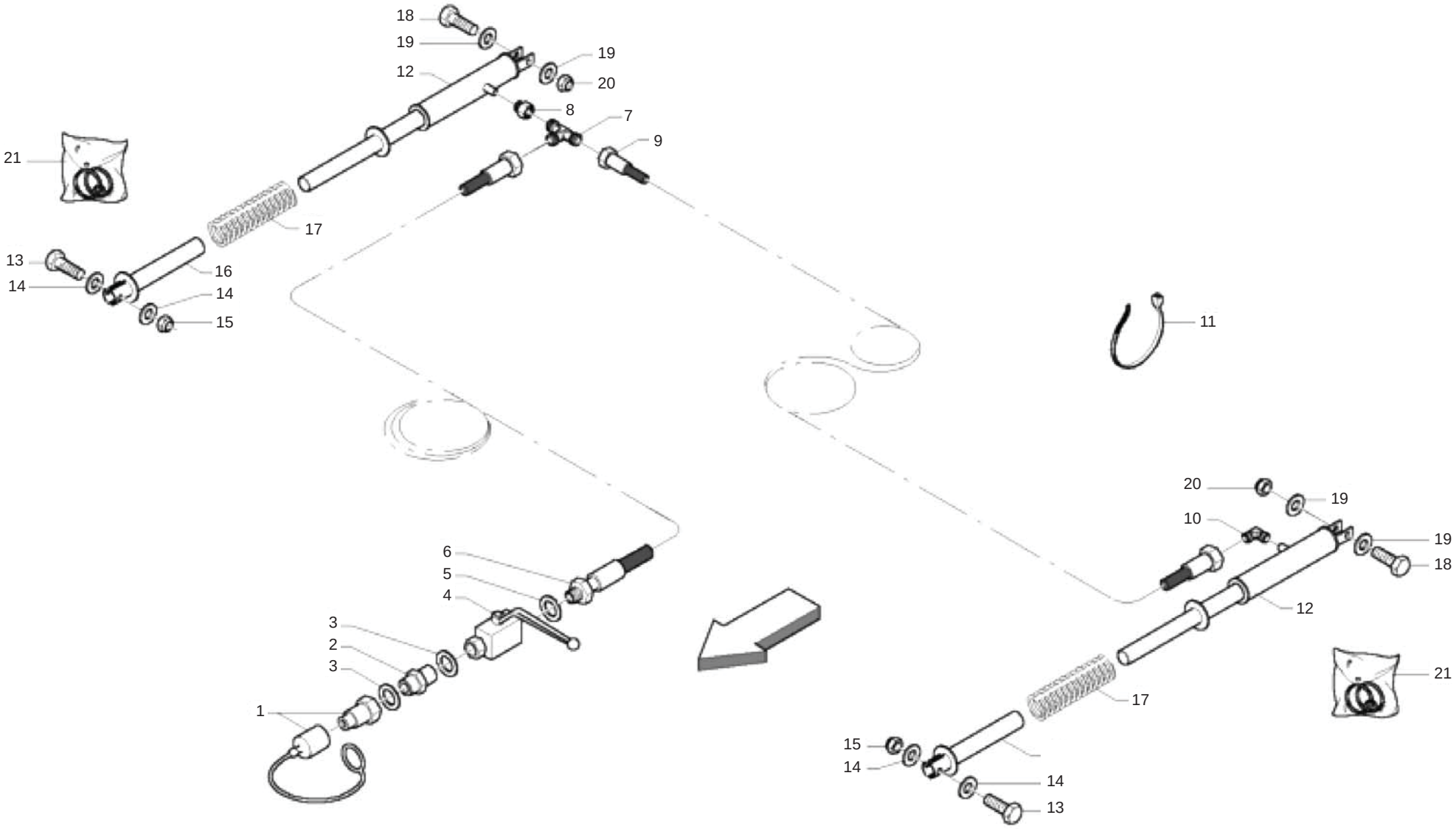

MASCHIO

cod. B0D5P0108

IMPIANTO IDRAULICO PICK-UP CUT
PICK-UP CUT HYDRAULIC SYSTEM

TAV_195

Pos.	Cod.	Descrizione	Description	Description	Benennung	Descripcion
1	B0H6000A0	INNESTO RAP.NV 12GAS-M	QUICK CLUTCH	EMBRAYAGE	SCHNELLKUPPLUNG	
2	B0H733671	NIPPLO RID.FORO 1MM. 1 2 -1 4	NIPPLE 1 2 -1 4	NIPPLE 1 MM 1 2 -1 4	NIPPEL 1 2 -1 4	
3	B01441415	RONDELLA IN RAME 1 4	WASHER	RONDELLE	BEILAGSCHEIBE 1 4 13X19X1,5	
4	B0H000119	RUBIN. A SFER.A.P.1 4 FEMM.-F	BALL COCK	ROBINET 1 4 FEMELLE	KUGELHAHN	
5	B01442015	ROS. 21 X27X1,5 RAME -1 2	WASHER	RONDELLE	BEILAGSCHEIBE 1 2	
6	B0H000250	TUBO IDRAUL.	HYDRAULIC HOSE	TUYAU HYDRAULIQUE	HYDRAULIKSCHLAUCH	
7	B0H000264	RACCORDO T 10 TN96-10LR	T FITTING TN96-10LR	RACCORD T 10	KUPPLUNG T 10	
8	B0H000265	RID. RASTELLI TN143-3 8 X1 4 R	REDUCTION TN143-3 8 X1 4 R	REDUCTION TN 143-3 8 X1 4 R	REDUKTION TN 143-3 8	
9	B0H000251	TUBO IDRAUL.	HYDRAULIC HOSE	TUYAU HYDRAULIQUE	HYDRAULIKSCHLAUCH	
10	B0H000086	RACCORDO L 10 TN94-10LR	UNION L 10	RACCORD L 10	ANSCHLUSSSTUECK L 10	
11	F05150055	FASCETTA LUMEFIX 3,6X180	CLAMP LUMEFIX	BANDE LUMEFIX	MANSCHETTE LUMEFIX	
12	B0H400072	MARTINETTO PICK-UP	SPRINTER PICK-UP JACK CUT	VERIN PICK-UP	SPRINTER PICK-UP ZYLINDER CUT	
13	F01020256	VITE M16X2X60 U5737 8.8ZN	SCR. M16X2X60 U5737 8.8ZN	VIS M16X 2X60 U5737 8.8 ZN	SCHRAUBE M16X2X60 U5737 8.8 ZN	TORNILLO M16X2X60 U5737 8.8 ZN
14	F01410100	ROS.M16 17X 30X 3 U6592 ZN	WASHER	RONDELLE	SCHEIBE	
15	B00920516	DADO M16X 1,5 D985 6S ZN	NUT M16X1,5 D985 6S ZN	ECROU	SELBSTSICHERNDE MUTTER M16-5S	
16	B07S01072	GUIDA MARTINETTO	JACK GUIDE	GUIDE VERIN	ZYLINDERFUEHRUNG	
17	B01800062	MOLLA PU TOPCUT	TOPCUT PICK-UP TINE	DENT PICK UP TOPCUT	TOPCUT PICK-UP FEDERZINKEN	
18	F01020256	VITE M16X2X60 U5737 8.8ZN	SCR. M16X2X60 U5737 8.8ZN	VIS M16X 2X60 U5737 8.8 ZN	SCHRAUBE M16X2X60 U5737 8.8 ZN	TORNILLO M16X2X60 U5737 8.8 ZN
19	F01410100	ROS.M16 17X 30X 3 U6592 ZN	WASHER	RONDELLE	SCHEIBE	
20	B00920516	DADO M16X 1,5 D985 6S ZN	NUT M16X1,5 D985 6S ZN	ECROU	SELBSTSICHERNDE MUTTER M16-5S	
21	B0H400061	KIT GUARNIZ. MARTIN. B0H400021	KIT JOINTS FOR H400021	KIT JOINTS POUR VERIN	DICHTUNGSSATZ FUER H400021	

TAV_200

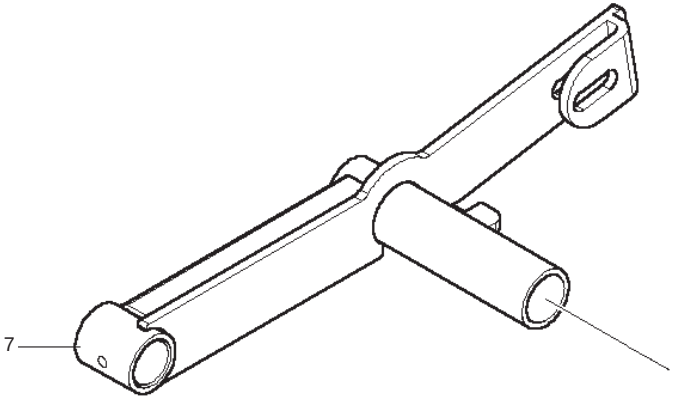

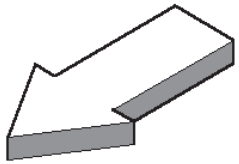

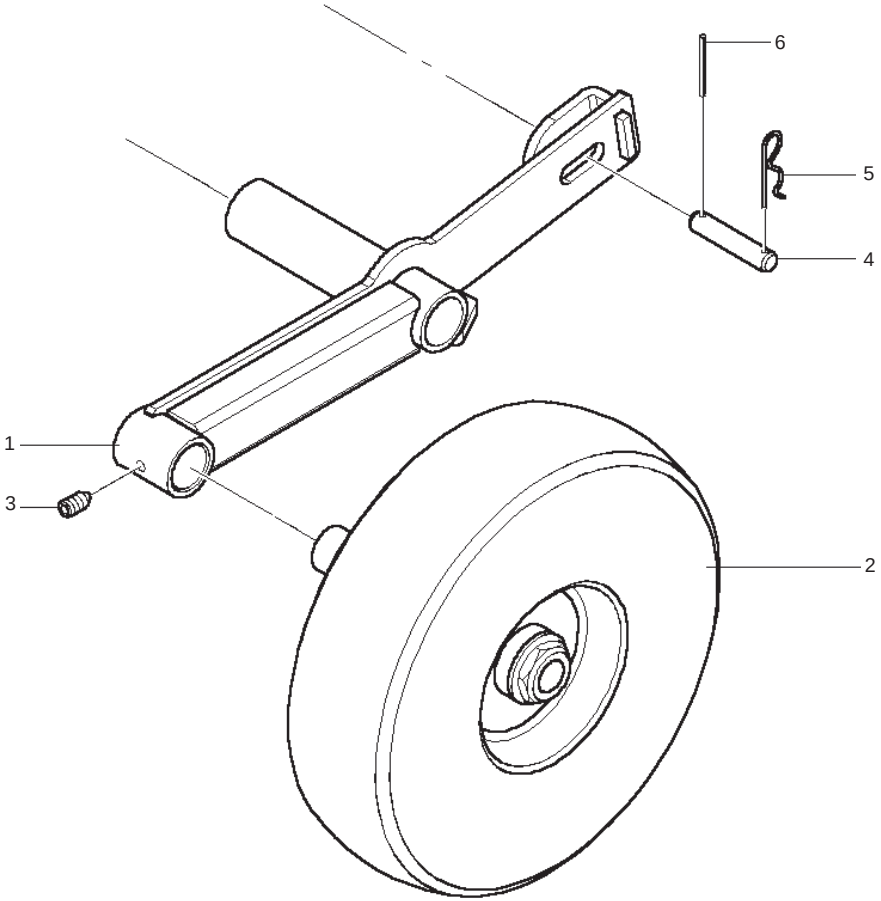

RUOTE PICK-UP
PICK-UP WHEEL

TAV_200

Pos.	Cod.	Descrizione	Description	Description	Benennung	Descripcion
1	B07SP0084	ATTACCO RUOTA SX LT	LT WHELL LEFT CONNECTION	ATTELAGE ROUE GAUCHE LT	RAD ANSCHLUSS LINKS LT	
2	B07100040	RUOTA IN GOMMA CON FUSEL16.650	TYRE WITH SPINDLE	ROUE EN CAOUTCHOUC	GUMMI RAD	
3	B00431016	VITE STEI M10X16-12.9 UNI 5	SCREW	VIS	SCHRAUBE	
4	B01300610	SPINA 15X 65 2F 4	PIN	AXE	ZAPFEN 15 X65	
5	B01170377	SPINA MOLLA 3 OCCH.SEMPL.ZINC.	PIN	GOUPILLE CLIPS	STIFT	
6	F02100060	SPINA ELAST. 4X 40 SS DIN 1481	PIN	GOUPILLE	STIFT	
7	B07SP0085	ATTACCO RUOTA DX LT	LT WHELL RIGHT CONNECTION	ATTELAGE ROUE DROIT LT	RAD ANSCHLUSS RECHTS LT	

TAV_350

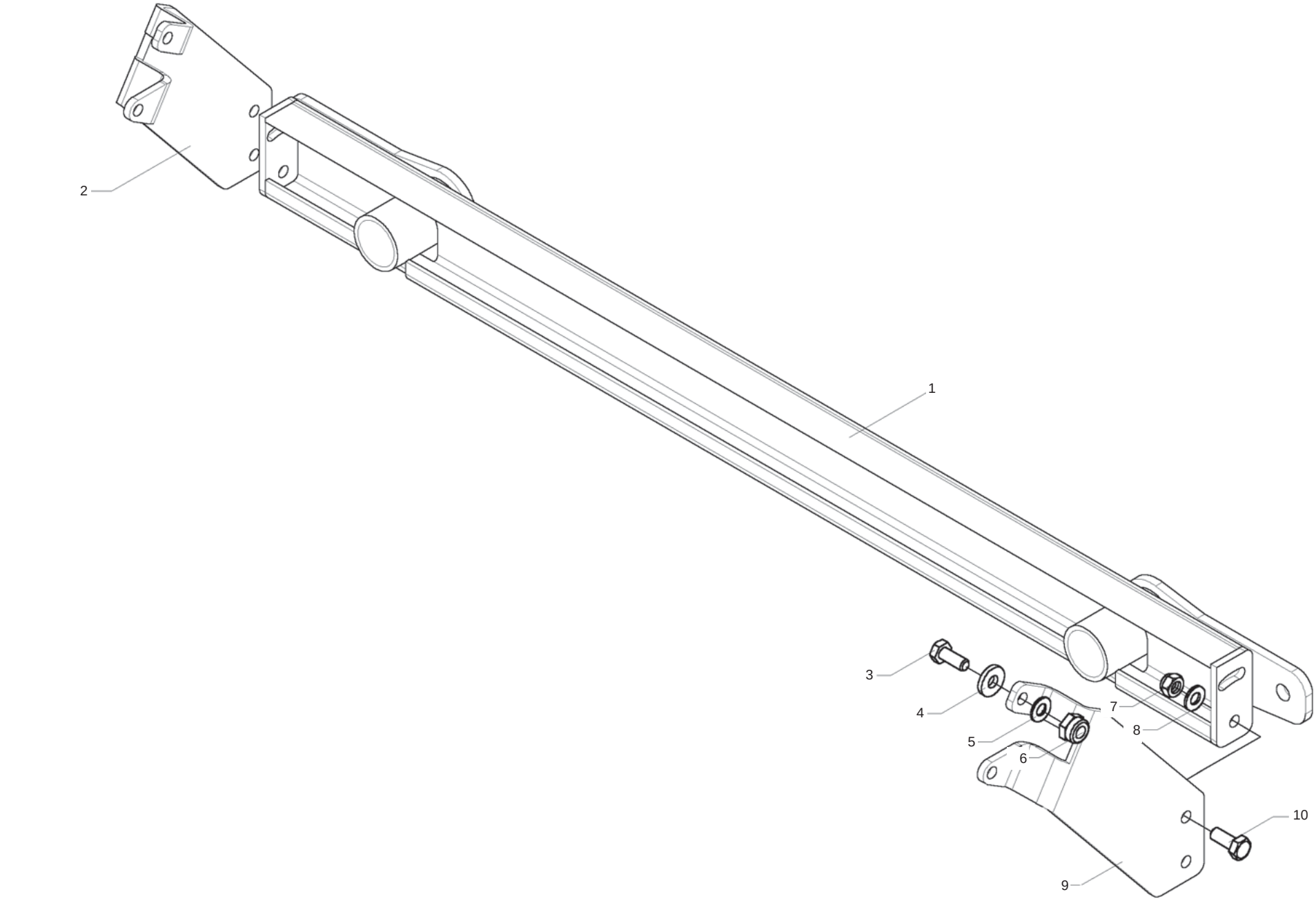

MASCHIO

cod. B0D5P0108

SOSTEGNO RUOTE PICK-UP
PICK-UP WHEEL SUPPORT

TAV_350

Pos.	Cod.	Descrizione	Description	Description	Benennung	Descripcion
1	B07SP0236	SOSTEGNO POST.	BACK SUPPORT	SUPPORT POSTERIEUR	HALTER HINTEN	
2	B0C4P0100	ATTACCO DX SOSTEGNO POST.	ATTACHEMENT	ATTELAGE	ANSCHLUSS RECHTS	
3	F01020514	VITE M12X1,75X40 U5739 8.8ZN	SCR. M12X1,75X40 U5739 8.8ZN	VIS M12X1,75X40 U5739 8.8ZN	SCHRA. M12X1,75X40 U5739 8.8ZN	TORN. M12X1,75X40 U5739 8,8ZN
4	B01516038	RALLA 13 32 5	FIFTH WHEEL	BUTEE	SCHEIBE	
5	F01410076	ROS.M12 13X 20X2,0 U1749 ZN	WASHER	RONDELLE	SCHEIBE	
6	B00920412	DADO M12X1,75 D985 8 ZN	NUT	ECROU	SELBSTSICHERNDE MUTTER M12-5S	
7	B00920412	DADO M12X1,75 D985 8 ZN	NUT	ECROU	SELBSTSICHERNDE MUTTER M12-5S	
8	F01410076	ROS.M12 13X 20X2,0 U1749 ZN	WASHER	RONDELLE	SCHEIBE	
9	B0C4P0099	ATTACCO SX SOSTEGNO POST.	ATTACHEMENT	ATTELAGE	ANSCHLUSS LINKS	
10	F01020512	VITE M12X1,75X35 U5739 8.8ZN	SCR. M12X1,75X35 U5739 8.8ZN	VIS M12X1,75X35 5739 8.8 ZN	SCHR. M12X1,75X35 5739 8.8 ZN	TORN. M12X1,75X35 5739 8.8 ZN

TAV_210

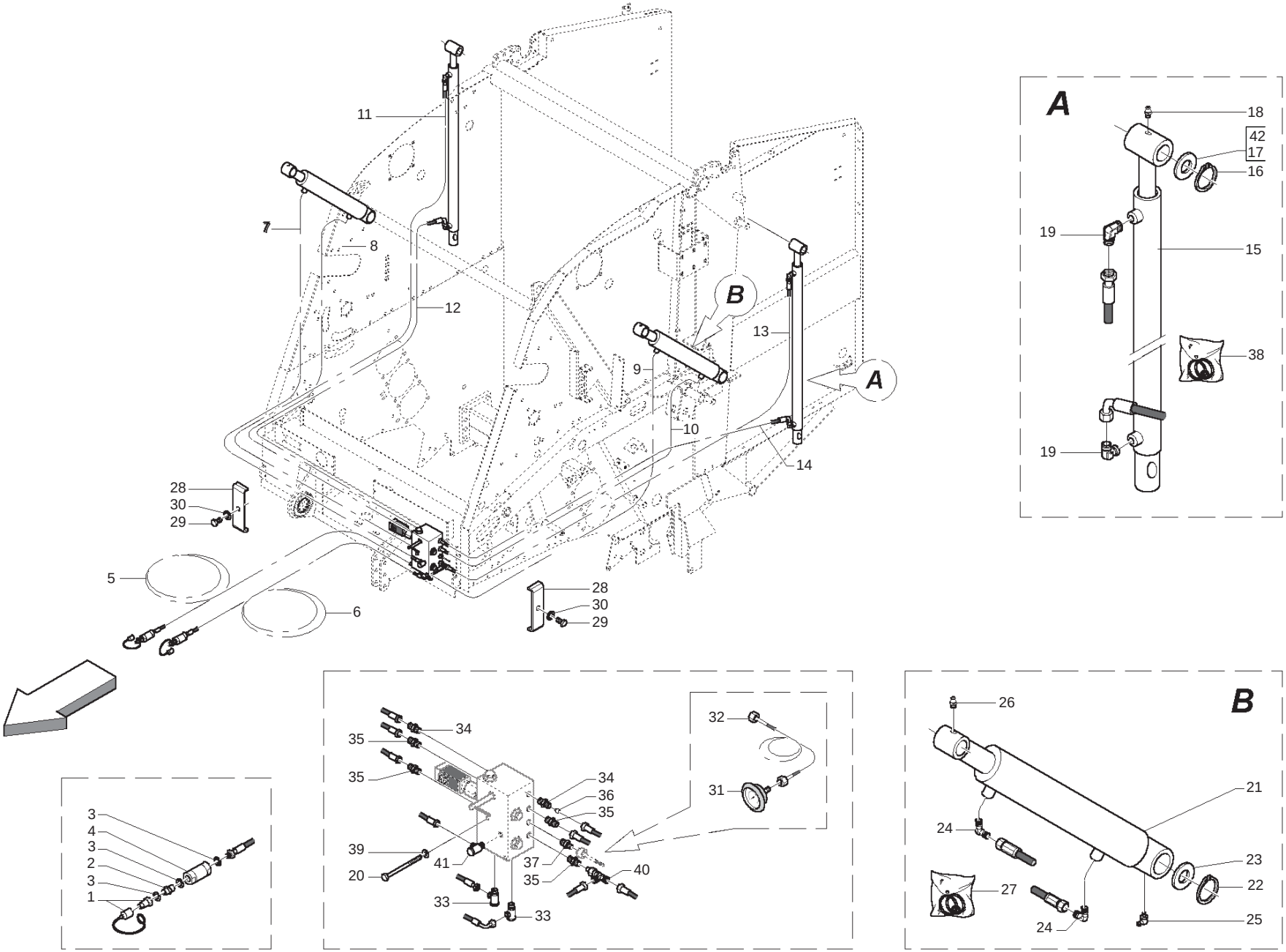
11
7
8
12
B
13
9
A
10
14
28
30
29
5
6
28
30
29
A
18
42
17
16
19
15
38
19
B
26
21
24
23
22
27
24
25
3
4
3
2
3
1
34
35
35
32
31
34
36
35
39
20
41
37
35
40
33
33

IMPIANTO IDRAULICO MACCHINA
MACHINE HYDRAULIC SYSTEM

TAV_210

Pos.	Cod.	Descrizione	Description	Description	Benennung	Descripcion
1	B0H6000A0	INNESTO RAP.NV 12GAS-M	QUICK CLUTCH	EMBRAYAGE	SCHNELLKUPPLUNG	
2	B0H6000AX	NIPPLO 1 2	NIPPLE 1 2	NIPPLE 1 2	NIPPEL 1 2	
3	B01442015	ROS. 21 X27X1,5 RAME -1 2	WASHER	RONDELLE	BEILAGSCHEIBE 1 2	
4	B0H000040	FILTRO IN LINEA 92400126X	FILTER IL12 60 R 94001261	FILTRE EN LIGNE IL12 60 R94001	FILTER IL12 60 R 94001261	
5	B0H000253	TUBO IDRAUL.	HYDRAULIC HOSE	TUYAU HYDRAULIQUE	HYDRAULIKSCHLAUCH	
6	B0H000254	TUBO IDRAUL.	HYDRAULIC HOSE	TUYAU HYDRAULIQUE	HYDRAULIKSCHLAUCH	
7	B0H000248	TUBO IDRAUL. AZZURRO	BLUE HYDRAULIC HOSE	TUYAU HYDRAULIQUE BLEU	BLAUER HYDRAULIKSCHLAUCH	
8	B0H000247	TUBO IDRAUL. GIALLO	YELLOW HYDRAULIC HOSE	TUYAU HYDRAULIQUE JAUNE	GELBER HYDRAULIKSCHLAUCH	
9	B0H000249	TUBO IDRAUL. AZZURRO	BLUE HYDRAULIC HOSE	TUYAU HYDRAULIQUE BLEU	BLAUER HYDRAULIKSCHLAUCH	
10	B0H000246	TUBO IDRAUL. GIALLO	YELLOW HYDRAULIC HOSE	TUYAU HYDRAULIQUE JAUNE	GELBER HYDRAULIKSCHLAUCH	
11	B0H000243	TUBO IDRAUL. NEUTRO	HYDRAULIC HOSE	TUYAU HYDRAULIQUE NEUTRE	HYDRAULIKSCHLAUCH	
12	B0H000244	TUBO IDRAUL. ROSSO	RED HYDRAULIC HOSE	TUYAU HYDRAULIQUE ROUGE	ROTER HYDRAULIKSCHLAUCH	
13	B0H000242	TUBO IDRAUL. NEUTRO	HYDRAULIC HOSE	TUYAU HYDRAULIQUE NEUTRE	HYDRAULIKSCHLAUCH	
14	B0H000245	TUBO IDRAUL. ROSSO	RED HYDRAULIC HOSE	TUYAU HYDRAULIQUE ROUGE	ROTER HYDRAULIKSCHLAUCH	
15	B0H400130	MARTINETTO PORTELLONE 265	REAR DOOR JACK 265	VERIN PORTE ARRIERE 265	ZYLINDER TUER 265	
16	F02050112	ANEL. D ARR. ALB. 30-E UNI3653	SEEGER RING	BAGUE SEEGER	SEEGERRING 30-E	
17	B01300101	SPES. 30,3 40 1 ZINCATO	SHIM GALV	ENTRETOISE GALV	DISTANZSTUECK 30,3 40 1	
18	B04200610	INGRASS.A SFERE M6X1 LUNGO	GREASE NIPPLE	GRAISSEUR HYDRAULIQUE	GERADER SCHMIERNIPPEL M6X1	
19	B0H000009	RACC. L 10 SOLO COR RASTELLI	UNION ELBOW 10	RACCORD L 10 SEULEMENT CORP	ANSCHLUSSSTUECK L 10	
20	F01020051	VITE M6X1X90 U5737 8.8ZN	SCR. M6X1X90 U5737 8.8ZN	VIS M6X 1X 90 U5737 8.8 ZN	SCHRAUBE M6X 1X90 U5737 8.8 ZN	TORNILLO M6X 1X90 U5737 8.8 ZN
21	B0H400128	MARTINETTO PRESSIONE 265	PRESSURE JACK 265	VERIN PRESSION 265	PRESSZYLINDER 265	
22	B01700035	ANEL. D ARR. ALB. 35-E UNI3653	SEEGER RING	BAGUE SEEGER	SEEGERRING 35-E	
23	B01519696	SPES. 35 47 1	SHIM	ENTRETOISE	DISTANZSTUCK 35 50 1	
24	B0H000009	RACC. L 10 SOLO COR RASTELLI	UNION ELBOW 10	RACCORD L 10 SEULEMENT CORP	ANSCHLUSSSTUECK L 10	
25	F01100013	INGRAS HYDR M 6X1 90	GREASE NIPPLE	GRAISSEUR HYDRAULIQUE	SCHMIERNIPPEL M6X1 90	
26	B04200610	INGRASS.A SFERE M6X1 LUNGO	GREASE NIPPLE	GRAISSEUR HYDRAULIQUE	GERADER SCHMIERNIPPEL M6X1	
27	B0H400146	KIT GUAR. MARTIN H400128-129-	SEAL KIT FOR H400128-129-134	KIT JOINTS POUR H400128-129-13	DICHTUNGSSATZ FUER H400128-129	
28	B0C005132	CAVALLOTTO DI FISSAGGIO	FIXING U BOLT	BOULON DE FIXAGE	U-BUEGEL	
29	F01020450	VITE M8X1,25X40 U5739 8.8ZN	SCR. M8X1,25X40 U5739 8.8ZN	VIS M8X1,25X40 U5739 8.8ZN	SCHRA. M8X1,25X40 U5739 8.8ZN	TORN. M8X1,25X40 U5739 8.8ZN
30	F01410051	ROS.M8 8,4X 17X1,6 U6592 ZN	WASHER M8 8,4X17X1,6 U6592 ZN	RONDELLE	SCHEIBE	
31	B0H000256	MANOMETRO HT	GAUGE HT	MANOMETRE HT	MANOMETER HT	
32	B0H000120	MICROTUBO FD1 4 RACC.MANOMETRO	PIPE	TUYAU CAPILLAIRE MINITEST	VERBINDUNGSSCHLAUCH VERTEILERB	
33	B0H000103	RACCORDO O 12 TN131-12LR	FILLET 0 12	RACCORD O 12	HOHLKEHLEN ANSCHLUSSSTUECK 0	
34	B0H000182	RACCORDO PER RIDUTT. DI FLUSSO	OIL FLOW REDUCER PIPE FITTING	RACCORD POUR REDUCTEUR DE FLUX	ANSCHLUSS FUER REDUKTIONS	
35	B0H000139	RACCORDO I 10 RASTELLI	UNION I 10	RACCORD I SEULEMENT CORPS	VERBINDUNGSTUECK I 10	
36	B00500070	GRANO M8 CON FORO 1,75MM	DOWEL M8 WITH HOLE 1.75MM	TOURILLON M8 AVEC TROU 1,75 MM	KORN MIT LOCH 1.75 MM	
37	B0H000140	NIPPLO GIUNZ GAS CILIN.1 4-1 4	NIPPLE 1 4-1 4	NIPPLE JONCTION	NIPPEL 1 4-1 4	
38	B0H400147	KIT GUAR. MARTIN H400130-131-	SEAL KIT FOR H400130-131-135	KIT JOINTS POUR H400130-131-13	DICHTUNGSSATZ FUER H400130-131	
39	F01420035	ROS.M6 6,4X 18X1,6 U6593 ZN	WASHER	RONDELLE	SCHEIBE	
40	B0H000252	RACC. T 10 RASTELLI TN121-10L	FITTING T 10	RACCORD T 10	ANSCHLUSSSTUECK T 10	
41	B0H000232	RACCORDO O 10 RASTELLI TN111-1	FITTING 0 10			
42	B01300100	SPES. 30,3 40 0,5 ZINCATO	SHIM GALV	ENTRETOISE GALV	DISTANZSTUECK 30,3 40 0,5	

TAV_215

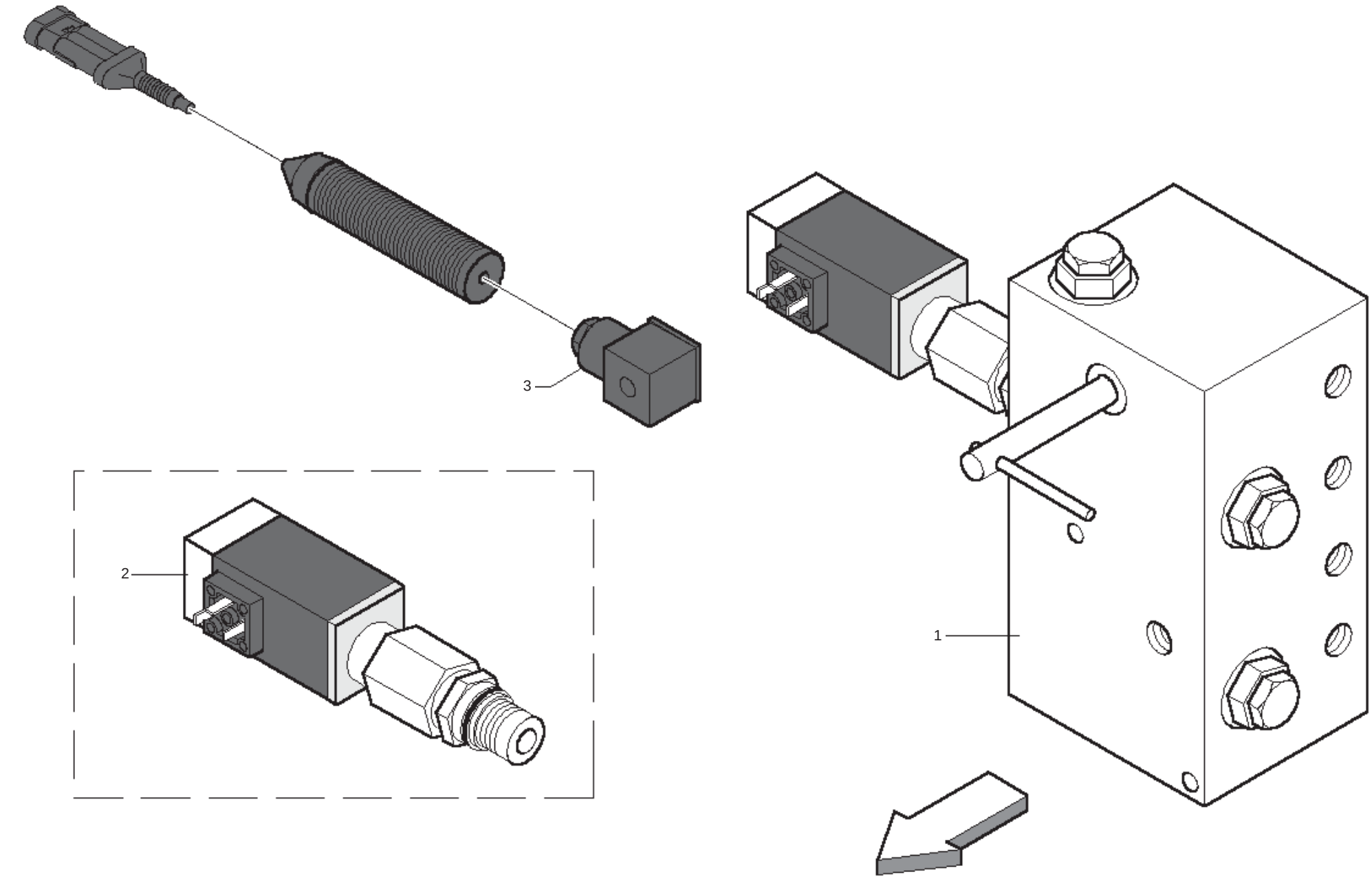

VALVOLA PRESSIONE ELETTRONICA
ELECTRONIC PRESSURE VALVE

TAV_215

Pos.	Cod.	Descrizione	Description	Description	Benennung	Descripcion
1	B0H0P0003	BLOCCO VALV. PRESSIONE LT	VALVE FRB12 E-B	SOUPAPE	VETIL FRB13 E-B	
2	B0H000288	VALVOLA PRESSIONE LAVORO	VALVE	SOUPAPE	HYDRAULISCHES VENTIL	
3	B0E0P0006	MODULO PRESSIONE	PRESSURE MODULE	MODULE PRESSION	MODULE DRUCK	

TAV_219

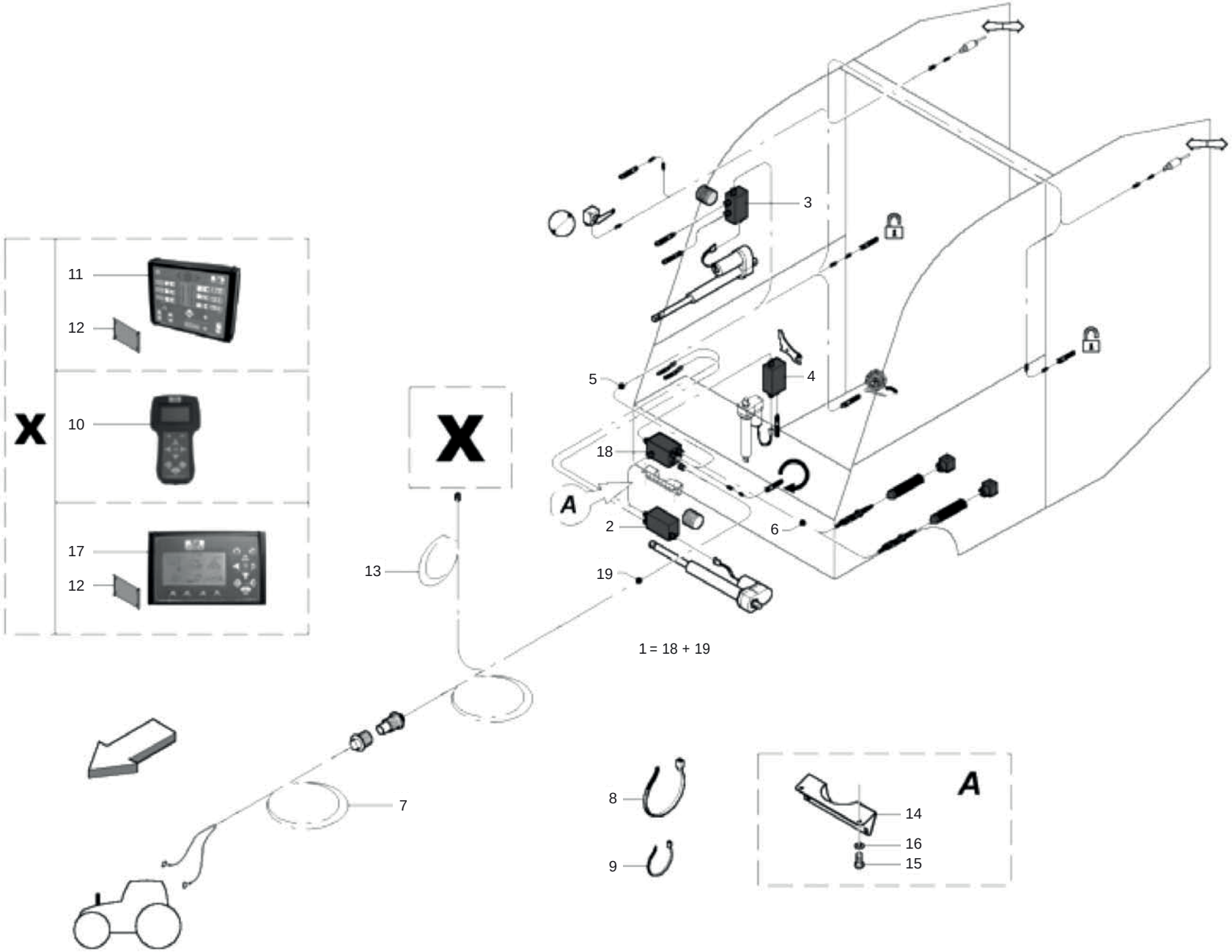

CABLAGGIO
CONTROL SYSTEM

TAV_219

Pos.	Cod.	Descrizione	Description	Description	Benennung	Descripcion
1	B0E0P0002	MOD.POW.BOX CON CAVI	POWER BOX MODULE WITH CONNECTI	MODULE POWER BOX AVEC ATTEL. C	MODULE KONTROLLBOX	
2	B0E0P0003	MOD.FILO COMPL.DI SENSORI M8	TWINE MODULE COMPLETE WITH SEN	MODULE FICELLE COMPLET AVEC CA	MODULE GARN	
3	B0E0P0004	MODULO RETE	NET MODULE WITH CONNECTION C6P	MODULE FILET AVEC ATTELAGE C6P	MODULE NETZ MIT ANSCHLUSS	
4	B0E0P0005	MODULO CUT CON ATTACCO C6P0085	CUT MODULE WITH CONNECTION C6P	MODULE CUT AVEC ATTELAGE C6P00	MODULE CUT MIT ASCHLUSS	
5	B0E0P0072	CABLAGGIO MACCHINA	BUS	BUS	BUS FUER HALL EFFEKT	
6	B0E0P0009	CABLAGGIO BUS AUSILIARIO	AUXILIARY BUS	BUS AUXILIAIRE	BUS	
7	B0E0P0010	CAVO TRATTORE	TRACTOR CABLE	CABLE TRACTEUR	KABEL SCHLEPPER	
8	B0E600001	FASCETTA SERRAC 8X2 L250MM MIN	CLAMP 8X2	BANDE 8X2	MANSCHETTE 8X2	
9	B0E600021	FASCETTA LUMEFIX 3,6X180	CLAMP LUMEFIX	BANDE LUMEFIX	MANSCHETTE LUMEFIX	
10	B0E0P0011	CENTRALINA MACCH.EASY TRONIC	MACH.CONTROL UNIT EASY TRONIC	MODULE DISPLAY LT EASY TRONIC	MODULE EASY TRONIC	
11	B0E0P0058	MODULO QUICK TRONIC	QUICK TRONIC MOD.	MODULE DISPLAY QUICK TRONIC	MODULE QUICK TRONIC	
12	B0E0P0059	CODA DI RONDINE FEMMINA D D	D&D FEMALE DOVETAIL	QUEUE D ARONDE FEMELLE	SCHWALBENSCHWANZ	
13	B0E0P0065	CABLAGGIO MACCHINA	TRACTOR MACHINE WIRING FOR POW	CABLAGE TRACTEUR	KABLE FUER TRAKTOR	
14	B0C6P0360	SOSTEGNO MODULO A FILO	SUPPORT FORM WIRE			
15	B00470820	VITE TTEI M 8X 20-10,9 UMBRAKO	SCREW	VIS	SCHRAUBE TTEI M 8X 20-10.9	
16	B01420820	ROS.M8 8,4X 17X1,6 U6592 ZN	WASHER M8 8,4X17X1,6 U6592 ZN	RONDELLE	SCHEIBE	
17	B0E0P0012	MODULO TOP TRONIC	TOP TRONIC MODULE	MODULE TOP TRONIC	MODULE TOP TRONIC	
18	B0E0P0066	MOD.POW.BOX SENCA CAVI	DISPLAY WITH CARD SPRINTER EXT	DISPLAY WITH FICHE SPRINTER EX	KONTROLLBOX OHNE KABEL	
19	B0E0P0065	CABLAGGIO MACCHINA	TRACTOR MACHINE WIRING FOR POW	CABLAGE TRACTEUR	KABLE FUER TRAKTOR	

TAV_225

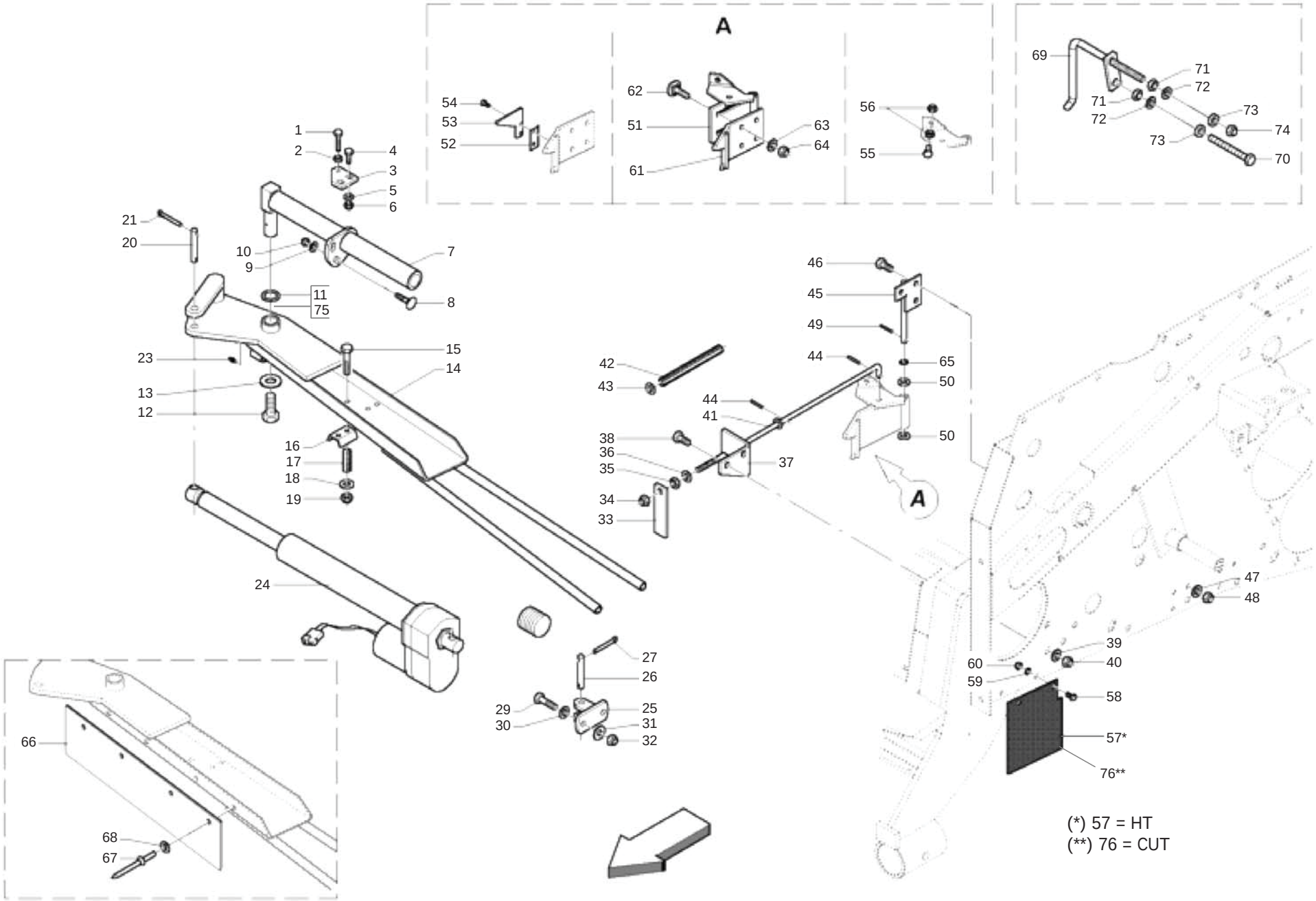

(*) 57 = HT
(**) 76 = CUT

MASCHIO

cod. B0D5P0108

LEGATORE FILO
TWINE BINDER

TAV_225

Pos.	Cod.	Descrizione	Description	Description	Benennung	Descripcion
1	F01020485	VITE M10X1,5X50 U5739 8.8ZN	SCR. M10X1,5X50 U5739 8.8ZN	VIS M 10X50	SCHRAUBE M 10X50	TORNILLO M 10X50
2	B00710310	DADO M10X1,25 U5588 6S ZN	NUT	ECROU	MUTTER M10-6S	
3	B0C005031	FERMO DI POSIZIONE	LOCK	ARRET	ARRETIERUNG	
4	B00181030	VITE M10X1,5 X 30 U5739 8.8ZN	SCREW	VIS	SCHRAUBE	
5	F01410062	ROS.M10 10,5X 18X 2 U6592 ZN	WASHER M10 10,5X 18X 2 U6592	RONDELLE M10 10,5X18X2 ZN	DICHTUNGSRING M10 10,5X18X2 ZN	RONDANA M10 10,5X18X2 ZN
6	F01230202	DADO M10X1,25 D985 8 ZN	SELF-LOCKING NUT	ECROU NYLSTOP	SELBSTSICHERNDE MUTTER M10-5S	
7	B07S01524	TRAVERSA	CROSS BAR	TRAVERSE	QUERTRAEGER	
8	B00523421	VITE SPECIALE TTQST M12X35-8.8	SPECIAL SCREW	VIS SPCIALE	SCHRAUBE TTQST M12X 35-8.8	
9	F01410076	ROS.M12 13X 20X2,0 U1749 ZN	WASHER	RONDELLE	SCHEIBE	
10	B00920412	DADO M12X1,75 D985 8 ZN	NUT	ECROU	SELBSTSICHERNDE MUTTER M12-5S	
11	B01300135	SPES. 28 44 0,5	SHIM	ENTRETOISE	DISTANZSTUECK 28 44 0,5	
12	F01020562	VITE M16X2X30 U5739 8.8ZN	SCR. M16X2X30 U5739 8.8ZN	VIS M16X2X30 U5739 8.8 ZN	SCHRAUBE M16X2X30 U5739 8.8 ZN	TORNILLO M16X2X30 U5739 8.8 ZN
13	B01519319	RALLA 16X38X5	FIFTH WHEEL	BUTEE	SCREIBE	
14	B07S01805	BRACCIO LEGATORE FILO	TWINE WRAPPING ARM	BRAS LIAGE FICELLE	GARNDINDINGUNSARM	
15	F01020068	VITE M8X1,25X40 U5737 8.8ZN	SCR. M8X1,25X40 U5737 8.8ZN	VIS M 8X1,25X40 U5737 8.8 ZN	SCHRA. M8X1,25X40 U5737 8.8 ZN	TORNIL.M8X1,25X40 U5737 8.8 ZN
16	B0C630434	FRENA SPAGO	TWINE BRAKE	PINCE FICELLE	GARNBREMSE	
17	B01821993	MOLLA	SPRING	RESSORT	FEDER	
18	F01410051	ROS.M8 8,4X 17X1,6 U6592 ZN	WASHER M8 8,4X17X1,6 U6592 ZN	RONDELLE	SCHEIBE	
19	B00920208	DADO M8X1 D985 8ZN	NUT M8X1 D985 8ZN	ECROU	SELBSTSICHERNDE MUTTER M8-5S	
20	B01A29508	SPINA MARTINETTO	CYLINDER PIN	GOUPILLE VERIN	STIFT	
21	B01150430	COPIGLIA 4X 30 U1336 ZN	GALV PIN	GOUPILLE GALV	SPLINT	
23	B04200610	INGRASS.A SFERE M6X1 LUNGO	GREASE NIPPLE	GRAISSEUR HYDRAULIQUE	GERADER SCHMIERNIPPEL M6X1	
24	B0E0P0087	ATTUAT. LEGATORE FILO	ACTUATOR LINEAR	ACTIONNEUR	AKTUATOR	
25	B07S01525	ATTACCO ATTUATORE	ACTUATOR ATTACHMENT	ATTELAGE ACTIONNEUR	HALTERUNG	
26	B01A29508	SPINA MARTINETTO	CYLINDER PIN	GOUPILLE VERIN	STIFT	
27	B01150430	COPIGLIA 4X 30 U1336 ZN	GALV PIN	GOUPILLE GALV	SPLINT	
29	F01020516	VITE M12X1,75X45 U5739 8.8ZN	SCR. M12X1,75X45 U5739 8.8ZN	VIS M12X1,75X45 U5739 8.8 ZN	SCHARAUBE M12X1,75X45 U5739 ZN	TORNIL.M12X1,75X45 U5739 8.8ZN
30	F01410076	ROS.M12 13X 20X2,0 U1749 ZN	WASHER	RONDELLE	SCHEIBE	
31	F01420120	ROS.M12 13X 36X2,5 U6593 ZN	WASHER	RONDELLE	SCHEIBE	
32	B00920412	DADO M12X1,75 D985 8 ZN	NUT	ECROU	SELBSTSICHERNDE MUTTER M12-5S	
33	B0C003115	AGGANCIO TAGLIO	COUPLER	ACCROCHAGE COUPE	ANKOPPELUNGSVORRICHTUNG	
34	B00920208	DADO M8X1 D985 8ZN	NUT M8X1 D985 8ZN	ECROU	SELBSTSICHERNDE MUTTER M8-5S	
35	B00710208	DADO M 8X1,25 U5588 6.8 ZN	NUT	ECROU	MUTTER M8-6S	
36	F01410051	ROS.M8 8,4X 17X1,6 U6592 ZN	WASHER M8 8,4X17X1,6 U6592 ZN	RONDELLE	SCHEIBE	
37	B0C005034	SOSTEGNO ASTA	ROD SUPPORT	SUPPORT BARRE	STANGENSTUETZE	
38	F01020514	VITE M12X1,75X40 U5739 8.8ZN	SCR. M12X1,75X40 U5739 8.8ZN	VIS M12X1,75X40 U5739 8.8ZN	SCHRA. M12X1,75X40 U5739 8.8ZN	TORN. M12X1,75X40 U5739 8,8ZN
39	F01410076	ROS.M12 13X 20X2,0 U1749 ZN	WASHER	RONDELLE	SCHEIBE	
40	B00920412	DADO M12X1,75 D985 8 ZN	NUT	ECROU	SELBSTSICHERNDE MUTTER M12-5S	
41	B00500098	ASTA REGOLATRICE	ADJUSTMENT BAR	BARRE DE REGLAGE	REGELSTANGE	
42	B01800036	MOLLA C FILO 1 L=203,5ZINCATA	C-SPRING	RESSORT C	C-FEDER	
43	F01410051	ROS.M8 8,4X 17X1,6 U6592 ZN	WASHER M8 8,4X17X1,6 U6592 ZN	RONDELLE	SCHEIBE	
44	B01110320	SPINA ELAST. 3X 20 SS DIN 1481	PIN	GOUPILLE	STIFT	
45	B07S00987	FULCRO LAMA	BLADE FULCRUM	POINT D APPUI LAME	KLINGENSCHWENKPUNKT	
46	F01020440	VITE M8X1,25X25 U5739 8.8ZN	SCR. M8X1,25X25 U5739 8.8ZN	VIS M8X1,25X25 U5739 8.8 ZN	SCHRAUBE M8X1,25X25U5739 8.8ZN	TORNIL.M8X1,25X25 U5739 8.8 ZN
47	F01410051	ROS.M8 8,4X 17X1,6 U6592 ZN	WASHER M8 8,4X17X1,6 U6592 ZN	RONDELLE	SCHEIBE	
48	B00920208	DADO M8X1 D985 8ZN	NUT M8X1 D985 8ZN	ECROU	SELBSTSICHERNDE MUTTER M8-5S	
49	B01110320	SPINA ELAST. 3X 20 SS DIN 1481	PIN	GOUPILLE	STIFT	
50	F01410062	ROS.M10 10,5X 18X 2 U6592 ZN	WASHER M10 10,5X 18X 2 U6592	RONDELLE M10 10,5X18X2 ZN	DICHTUNGSRING M10 10,5X18X2 ZN	RONDANA M10 10,5X18X2 ZN
51	B07SP0044	FULCRO DI TAGLIO	CUTTING FULCRUM	POINT D APPUI COUPE	SCHNEIDFULCRUM	
52	B07U00011	LAMA FILO	BLADE BY MARTOR ART. 37	LAME ETS. MARTOR ART. 37	KLINGE MARTOR ART. 37 ABB. 533	
53	B0C002765	FISSAGGIO LAMA	BLADE FASTERNER	FIXAGE LAME	KLINGENHALTERUNG	
54	F01020378	VITE M5X0,8X16 U5739 8.8ZN	SCR. M5X0,8X16 U5739 8.8ZN	VIS M5X0,8X16 U5739 8.8ZN	SCHRAUBE M5X0,8X16 U5739 8.8ZN	TORNILLO M5X0,8X16 U5739 8.8ZN
55	F01020440	VITE M8X1,25X25 U5739 8.8ZN	SCR. M8X1,25X25 U5739 8.8ZN	VIS M8X1,25X25 U5739 8.8 ZN	SCHRAUBE M8X1,25X25U5739 8.8ZN	TORNIL.M8X1,25X25 U5739 8.8 ZN
56	B00710208	DADO M 8X1,25 U5588 6.8 ZN	NUT	ECROU	MUTTER M8-6S	
57	B07V00080	PROTEZ.LEG.FILO SPRINTER NEW	TWINE TYING KIT PROTECTION	PROTECTION LIAGE FICELLE SPRIN	GARNBINDUNGSSCHUTZ	
58	F01020436	VITE M8X1,25X20 U5739 8.8ZN	SCR. M8X1,25X20 U5739 8.8ZN	VIS M8X1,25X 20 U5739 8.8 ZN	SCHRAUBE M8X1,25X20U5739 8.8ZN	TORN. M8X1,25X20 U5739 8.8 ZN
59	F01420048	ROS.M8 8,4X 24X 2 U6593 ZN	WASHER	RONDELLE	SCHEIBE	

TAV_225

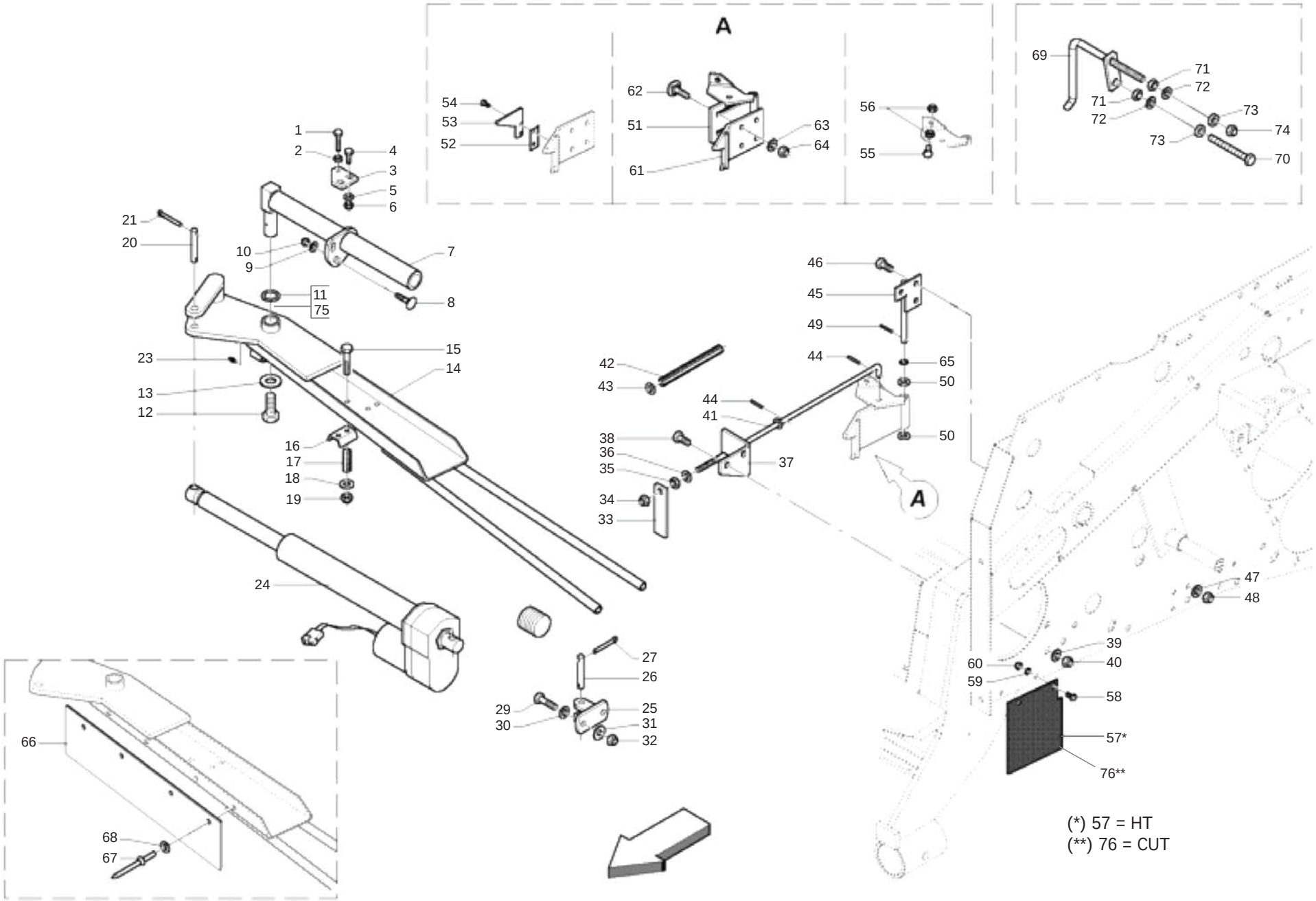

(*) 57 = HT
(**) 76 = CUT

MASCHIO

cod. B0D5P0108

LEGATORE FILO
TWINE BINDER

TAV_225

Pos.	Cod.	Descrizione	Description	Description	Benennung	Descripcion
60	B00920208	DADO M8X1 D985 8ZN	NUT M8X1 D985 8ZN	ECROU	SELBSTSICHERNDE MUTTER M8-5S	
61	B07SP0045	PORTA LAMA	BLADE HOLDER	ATTELAGE LAME	KLINGEHALTER	
62	F01060202	VITE M8X1,25X25 U5731 4.6ZN	SCR. M8X1,25X25 U5731 4.6ZN	VIS M8X1,25X25 U5731 4.6	DUEBEL M8X1,25X25 U5731 4.6 ZN	TORNILLO M8X1,25X25 U5731 4.6
63	F01410051	ROS.M8 8,4X 17X1,6 U6592 ZN	WASHER M8 8,4X17X1,6 U6592 ZN	RONDELLE	SCHEIBE	
64	B00920208	DADO M8X1 D985 8ZN	NUT M8X1 D985 8ZN	ECROU	SELBSTSICHERNDE MUTTER M8-5S	
65	B04313037	ANELLO TORICO OR 3037	TORIC RING	BAGUE TORIQUE OR 3037	RING	
66	B07VP0004	PROT. BRACCIO LEG.A FILO	TWINE WRAP ARM PROTECTION	PROTECTION BRAS	SCHUTZARM	
67	F02250137	RIVETTO STR. 5 X20 U9200A AL	RIVET 5 X20 U9200A AL			
68	F01420023	ROS.M5 5,3X 15X1,5 U6593 ZN	WASHER M5 5,3X 15X1,5 U6593			
69	B07S01238	DITO PRENDI FILO	TWINE GRASPER	DOIGT PRISE FICELLE	FINGEL FUER GARN	
70	F01020524	VITE M12X1,75X90 U5739 8.8ZN	SCR. M12X1,75X90 U5739 8.8ZN			
71	F01200293	DADO M12X1,75 U5588 CL8 ZN	NUT M12X1,75 U5588 6S ZN	ECROU M12X1,75 U5588 6S ZN	MUTTER M12X1,75 U5588 6S ZN	TUERCA M12X1,75 U5588 6S ZN
72	F01410076	ROS.M12 13X 20X2,0 U1749 ZN	WASHER	RONDELLE	SCHEIBE	
73	B01516038	RALLA 13 32 5	FIFTH WHEEL	BUTEE	SCHEIBE	
74	B00920412	DADO M12X1,75 D985 8 ZN	NUT	ECROU	SELBSTSICHERNDE MUTTER M12-5S	
75	B01300134	SPESSORE 28 44 0.2	SHIM 28 44 0.2			
76	B07V00072	PROT. IN GOMMA LAT.	SIDE RUBBERED PROTECTIONS	PROTECTION LATERALE EN CAOUT.	SEITER GUMMISCHUTZ	

TAV_230

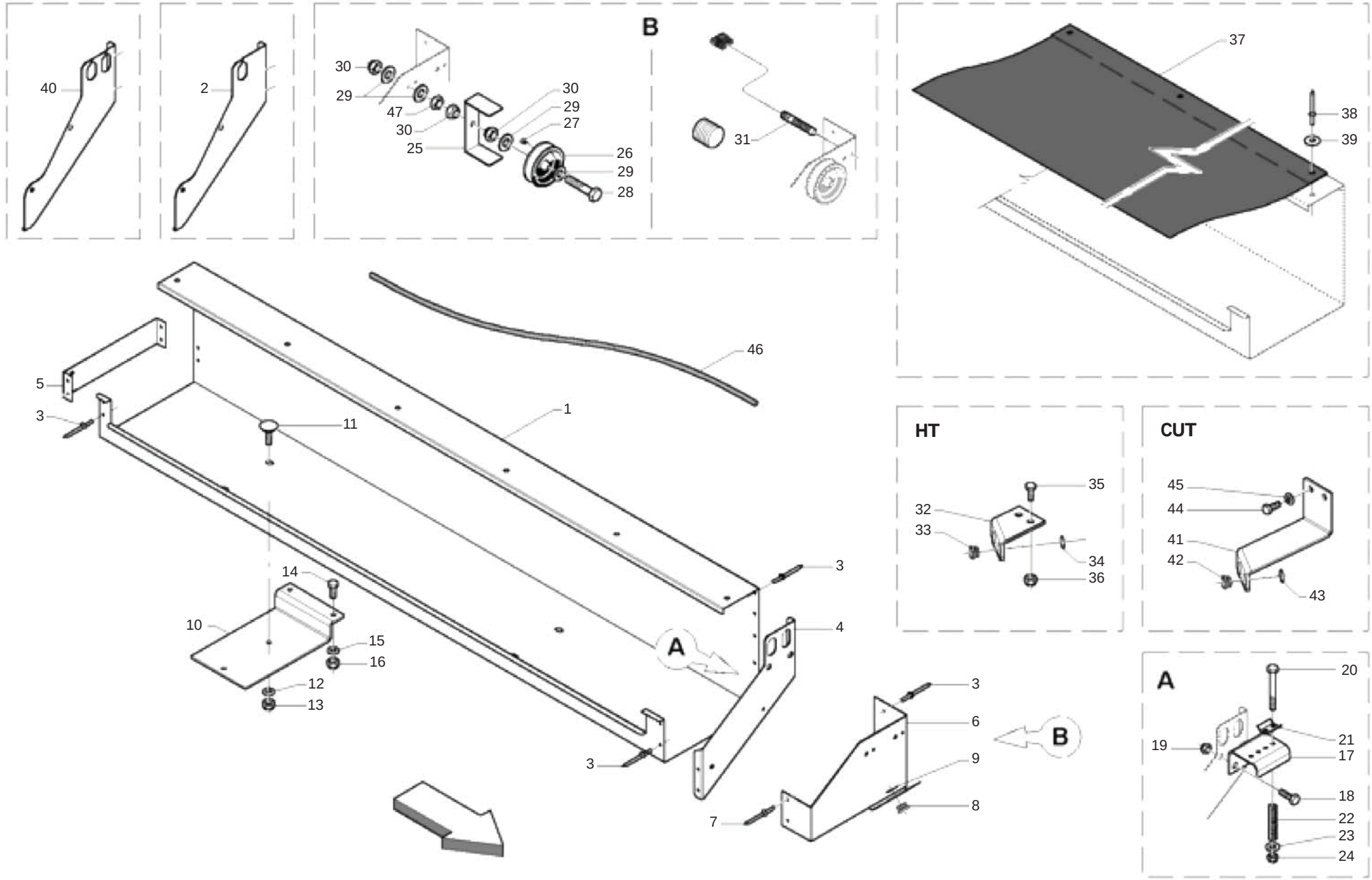

MASCHIO

cod. B0D5P0108

LEGATORE FILO: CASSONETTO
TWINE BINDER: TWINE BOX

TAV_230

Pos.	Cod.	Descrizione	Description	Description	Benennung	Descripcion
1	B0C3P0037	CORPO CASSONE SPAGO	TWINE HOLDER BODY	CORPS BOITE A FICELLE	GEHAUSE DER BINDENGARNAUFBEWAH	
2	BC4P0038L	DIVISORE	SEPARATOR			
3	B01000010	RIVETTO STR. 6X12 U9200A AL	RIVET	RIVET	ABREISSNIETEN 6X10	
4	B0C4P0036	DIVISORE	DIVIDER			
5	B0C3P0036	FERMO TERMINALE	STOP TERMINAL			
6	B0C005016	ATTACCO CARRUCOLE	PULLEY ATTACHMENT	ATTELAGE POULIE	ROLLEN BEFESTIGUNG	
7	B01000011	RIVETTO STR. 6X12 U9200A AL	RIVET 6X12 U9200A AL	RIVET	ABREISSNIETEN 6X15	
8	B03500097	BUSSOLA PASSAGGIO SPAGO	TWINE GUIDE BUSH	DOUILLE PASSAGE FICELLE	SCHNURFUEHRUNGSBUCHSE	
9	F02050101	ANEL. D ARR. ALB. 25-E UNI3653	SEEGER RING	BAGUE SEEGER	SEEGERRING 25-E	
10	B0C004685	SOSTEGNO CASSONE SPAGO	TWINE BOX HOLDER	SUPPORT RESERVOIR FICELLE	SCHNURKASTENHALTERUNG	
11	B00321020	VITE M10X1,5 X 30 U5731 4.6ZN	SCREW	VIS	SCHRAUBE VERZINKT TTQST M10X20	
12	F01420060	ROS.M10 10,5X 30X2,5 U6593 ZN	WASHER	RONDELLE	SCHEIBE	
13	F01230202	DADO M10X1,25 D985 8 ZN	SELF-LOCKING NUT	ECROU NYLSTOP	SELBSTSICHERNDE MUTTER M10-5S	
14	B00181030	VITE M10X1,5 X 30 U5739 8.8ZN	SCREW	VIS	SCHRAUBE	
15	F01410062	ROS.M10 10,5X 18X 2 U6592 ZN	WASHER M10 10,5X 18X 2 U6592	RONDELLE M10 10,5X18X2 ZN	DICHTUNGSRING M10 10,5X18X2 ZN	RONDANA M10 10,5X18X2 ZN
16	F01230202	DADO M10X1,25 D985 8 ZN	SELF-LOCKING NUT	ECROU NYLSTOP	SELBSTSICHERNDE MUTTER M10-5S	
17	B0C005012	BASE FRENASPAGO	TWINE BRAKE BASE	BASE ARRET FICELLE	SCHNURBREMSENAUFLAGE	
18	F01020506	VITE M12X1,75X20 U5739 8.8ZN	SCR. M12X1,75X20 U5739 8.8ZN	VIS M 12X20	SCHRAUBE M 12X20	TORNILLO M 12X20
19	B00920412	DADO M12X1,75 D985 8 ZN	NUT	ECROU	SELBSTSICHERNDE MUTTER M12-5S	
20	F01020068	VITE M8X1,25X40 U5737 8.8ZN	SCR. M8X1,25X40 U5737 8.8ZN	VIS M 8X1,25X40 U5737 8.8 ZN	SCHRA. M8X1,25X40 U5737 8.8 ZN	TORNIL.M8X1,25X40 U5737 8.8 ZN
21	B0C630434	FRENA SPAGO	TWINE BRAKE	PINCE FICELLE	GARNBREMSE	
22	B01821993	MOLLA	SPRING	RESSORT	FEDER	
23	F01410051	ROS.M8 8,4X 17X1,6 U6592 ZN	WASHER M8 8,4X17X1,6 U6592 ZN	RONDELLE	SCHEIBE	
24	B00920208	DADO M8X1 D985 8ZN	NUT M8X1 D985 8ZN	ECROU	SELBSTSICHERNDE MUTTER M8-5S	
25	B0C230438	FERMO	LOCK	ARRET	HALTER	
26	B03730455	CARRUCOLA FILO RIF.333 60	PULLEY	POULIE	LAUFROLLE	
27	B003F4813	VITE AUTOF.T. 4,8X13 DIN798	SCREW	VIS	SCHRAUBE	
28	B00180655	VITE M6X1X 55 U5739 8.8ZN	SCREW	VIS	ZINKSCHRAUBE TE M6X55-8.8 UNI	
29	F01410037	ROS.M6 6,4X12,5X1,6 U6592 ZN	WASHER	RONDELLE	BEILAGSCHEIBE 6	
30	B00920106	DADO M6X1 D985 8ZN	NUT	ECROU	SELBSTSICHERNDE MUTTER M6-5S	
31	B0E000102	SENS. DI PROSSIMITA FILO	PROXIMITY SENSORS M8	SENSEUR DE PROXIMITE	ABSTANDSMELDER	
32	B0C005385	ATTACCO BOCCOLE PASSAFILO HT	BUSH COUPLING HT	ATTELAGE DOUILLES PASSE-FICELL	HUELSEANSCHLUSS	
33	B03500097	BUSSOLA PASSAGGIO SPAGO	TWINE GUIDE BUSH	DOUILLE PASSAGE FICELLE	SCHNURFUEHRUNGSBUCHSE	
34	F02050101	ANEL. D ARR. ALB. 25-E UNI3653	SEEGER RING	BAGUE SEEGER	SEEGERRING 25-E	
35	F01020512	VITE M12X1,75X35 U5739 8.8ZN	SCR. M12X1,75X35 U5739 8.8ZN	VIS M12X1,75X35 5739 8.8 ZN	SCHR. M12X1,75X35 5739 8.8 ZN	TORN. M12X1,75X35 5739 8.8 ZN
36	B00920412	DADO M12X1,75 D985 8 ZN	NUT	ECROU	SELBSTSICHERNDE MUTTER M12-5S	
37	B07VP0002	COPERT CASSONE SPAGO 265-280	TWINE BOX COVER 265-280	COUVERTURE GRANDE CAISSE 265-2	DECKEL GARNGEHAUSE	
38	B01000010	RIVETTO STR. 6X12 U9200A AL	RIVET	RIVET	ABREISSNIETEN 6X10	
39	F01420035	ROS.M6 6,4X 18X1,6 U6593 ZN	WASHER	RONDELLE	SCHEIBE	
40	BC4P0037L	DIVISORE	SEPARATOR			
41	B0C005002	ATT. BOCCOLE PASSAFILO HTC-HTU	BUSH ATTACHMENT	ATTELAGE DOUILLE	BUCHSENBEFESTIGUNG	
42	B03500097	BUSSOLA PASSAGGIO SPAGO	TWINE GUIDE BUSH	DOUILLE PASSAGE FICELLE	SCHNURFUEHRUNGSBUCHSE	
43	F02050101	ANEL. D ARR. ALB. 25-E UNI3653	SEEGER RING	BAGUE SEEGER	SEEGERRING 25-E	
44	F01020516	VITE M12X1,75X45 U5739 8.8ZN	SCR. M12X1,75X45 U5739 8.8ZN	VIS M12X1,75X45 U5739 8.8 ZN	SCHARAUBE M12X1,75X45 U5739 ZN	TORNIL.M12X1,75X45 U5739 8.8ZN
45	F01410076	ROS.M12 13X 20X2,0 U1749 ZN	WASHER	RONDELLE	SCHEIBE	
46	B07VP0012	FUNE ELASTICA DIAM.6 - L=1720	ROPE ELASTIC 6 L=1720			
47	F01200232	DADO M6X1 U5588 CL8 ZN	NUT M6X1 U5588 6.8ZN	ECROU 6 UNI 5588 6.8 ZN	MUTTER 6 UNI 5588 6.8 ZN	TUERCA 6 UNI 5588 6.8 ZN

TAV_235

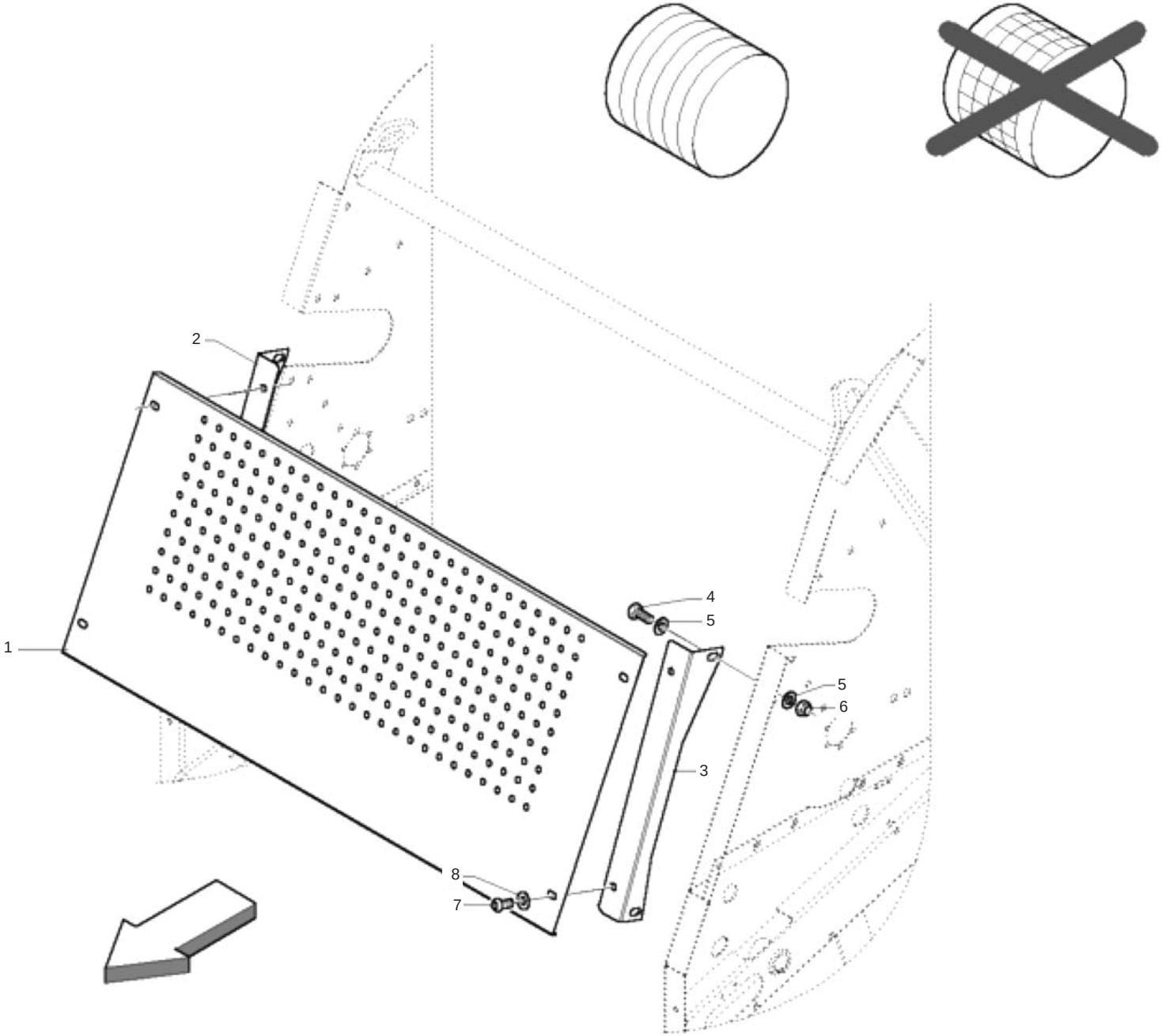

CARTER ANTERIORE (SOLO CON LEGATORE FILO)
FRONT CARTER (ONLY WITH TWINE BINDER)

TAV_235

Pos.	Cod.	Descrizione	Description	Description	Benennung	Descripcion
1	B0C3P0009	PROTEZIONE SOLO FILO	ONLY TWINE PROTECTION	PROTECTION SEULEMENT FICELLE	SCHUETZ NUR GARN	
2	B0C3P0007	ATTACCO DX PROTEZIONE FILO	TWINE RIGHT PROTECTION ATTACHM	ATTELAGE DROIT PROTECTION FICE	ANSCHLUSS RECHT GARNSCHUETZ	
3	B0C3P0008	ATTACCO SX PROTEZIONE FILO	TWINE LEFT PROTECTION ATTACHME	ATTELAGE GAUCHE PROTECTION FIC	ANSCHLUSS LINKS GARNSCHUETZ	
4	F01020508	VITE M12X1,75X 25 U5739 8.8ZN	SCREW	VIS	SCHRAUBE	
5	F01410076	ROS.M12 13X 20X2,0 U1749 ZN	WASHER	RONDELLE	SCHEIBE	
6	B00920412	DADO M12X1,75 D985 8 ZN	NUT	ECROU	SELBSTSICHERNDE MUTTER M12-5S	
7	B00470825	VITE TTEI M 8X 25-10,9 UNBRA	SCREW	VIS	SCHRAUBE TTEI M 8X25-10,9 UNBR	
8	F01420048	ROS.M8 8,4X 24X 2 U6593 ZN	WASHER	RONDELLE	SCHEIBE	

TAV_240

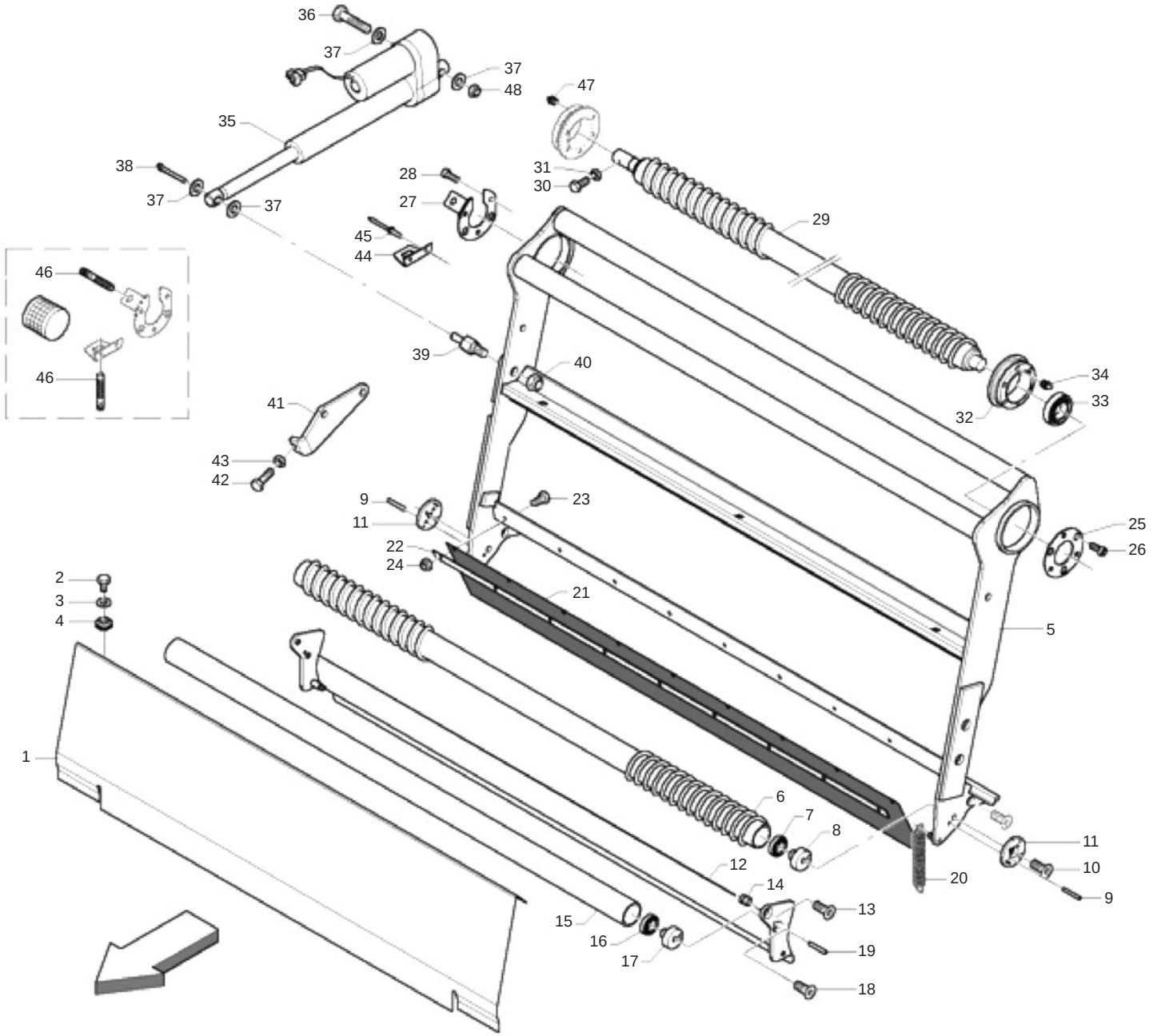

MASCHIO

cod. B0D5P0108

LEGATORE RETE (PARTE 1)
NET BINDER (PART 1)

TAV_240

Pos.	Cod.	Descrizione	Description	Description	Benennung	Descripcion
1	B0C3P0035	PROT. PORTARETE	NET HOLDER PROTECTION	PROTECTION PORTE FILET	SCHUETZ NETZHALTER	
2	F01020432	VITE M8X1,25X16 U5739 8.8ZN	SCR. M8X1,25X16 U5739 8.8ZN	VIS M8 X1,25X16 U5739 8.8 ZN	SCHRAUBE M8X1,25X16U5739 8.8ZN	TORNILLO M8X1,25X16U5739 8.8ZN
3	F01410051	ROS.M8 8,4X 17X1,6 U6592 ZN	WASHER M8 8,4X17X1,6 U6592 ZN	RONDELLE	SCHEIBE	
4	B00990003	DADO TIPO C 4808-BM8X1,25	NUT	ECROU	MUTTER	
5	B07SP0090	BRACCIO PORTARETE	NET HOLDER ARM	BRAS PORTE FILET	NETZHALTERARM	
6	B07S00648	RULLO FOLLE RETE	IDLE ROLLER	ROULEAU FOU	UMLENKWALZE	
7	B02301716	CUSC. 2203 E-2RS1TN9 RIF.SKF	BEARING	ROULEMENT	LAGER 2203 E-2RS1TN9 RIF. SKF	
8	B035P0008	PERNO RULLO FOLLE NEW	NEW IDLE ROLLER PIN	TOURILLON ROULEAU FOU NEW	BOLZEN UMLENKWALZE	
9	F02100079	SPINA E.P. 5X 20 U6873 C70 BR	PIN EL. 5X 20 U6873 C70 BR			
10	B00441025	VITE TSPEI M10X 25-10.9 UNI59	SCREW	VIS	SCHRAUBE VERZINKT TSPEI M10X25	
11	B013P0128	RALLA DI FERMO	STOP FIFTH WHEEL	EXCENTRIQUES	DISTANZSCHEIBE	
12	B07SP0286	PINZA RETE	NET CLAMP	ETRIER FILET	NETZZANGE	
13	B00441020	VITE TSPEI M10X 20-10.9 UNI 5	SCREW	VIS	SCHRAUBE TSPEI M10X 20-10.9	
14	B01300401	BUSSOLA FILETTATA	PIN WITHOUT NET	DOUILLE FILETEE	NETZAUFNAHMEZANGENBOLZEN	
15	B07SP0100	CORPO RULLO FOLLE LISCIO	SMOOTH IDLE ROLLER BODY	CORPS ROULEAU FOU LISSE	GEHAUSE DER GLATTLOSWALZE	
16	B02301716	CUSC. 2203 E-2RS1TN9 RIF.SKF	BEARING	ROULEMENT	LAGER 2203 E-2RS1TN9 RIF. SKF	
17	B035P0008	PERNO RULLO FOLLE NEW	NEW IDLE ROLLER PIN	TOURILLON ROULEAU FOU NEW	BOLZEN UMLENKWALZE	
18	B00441020	VITE TSPEI M10X 20-10.9 UNI 5	SCREW	VIS	SCHRAUBE TSPEI M10X 20-10.9	
19	B01110612	SPINA ELAST. 6X 12 SS DIN 1481	PIN	GOUPILLE	STIFT	
20	B01800025	MOLLA 2 13 98T GRUPPO RETE	SPRING	RESSORT	FEDER	
21	B07VP0001	BANDELLA DI SOSTEGNO	SUPPORT BAND	BANDE DE SUPPORT	HALTERBANDE	
22	B0C2P0020	PREMIGOMMA	RUBBER HOLDER	PRESSE-CAOUTCHOUC	GUMMIDRUCKER	
23	B00180620	VITE M6X1X20 U5739 8.8ZN	SCREW	VIS	SCHRAUBE	
24	B00920106	DADO M6X1 D985 8ZN	NUT	ECROU	SELBSTSICHERNDE MUTTER M6-5S	
25	B01300389	FLANGIA DI CONTEGNO	FLANGE	FLASQUE	DICHTUNGSFLANSCH	
26	B00400825	VITE M8X1,25X25 U5931 10.9ZD	SCREW	VIS	SCHRAUBE	
27	B0C004932	PIASTRA RITEGNO	PLATE	PLAQUE	PLATTE	
28	B00400825	VITE M8X1,25X25 U5931 10.9ZD	SCREW	VIS	SCHRAUBE	
29	B07S00649	RULLO CONTARETE	NET COUNTER ROLLER	ROULEAU COMPTE-FILET	NETZZAHLERWALZE	
30	F01020380	VITE M5X0,8X20 U5739 8.8ZN	SCR. M5X0,8X20 U5739 8.8ZN	VIS M5X0,8X20 U5739 8.8ZN	SCHRAUBE M5X0,8X20 U5739 8.8ZN	TORNILLO M5X0,8X20 U5739 8.8ZN
31	F01200220	DADO M5X0,8 U5588 CL8 ZN	NUT M5X0,8 U5588 6.8ZN	ECROU 5 UNI 5588 6.8 ZN	MUTTER 5 UNI 5588 6.8 ZN	TUERCA 5 UNI 5588 6.8 ZN
32	B02700044	SUPP BRAC PORTA RETE E RULLO	NET AND ROLLER ARM SUPPORT	SUPPORT BRAS PORTE-FILET ET RO	LAGER DES NETZTRAGERARMS UND W	
33	B02042517	CUSC 6305-2RS CAT.B-ST004	BEARING	ROULEMENT	LAGER 6305-2RS	
34	B04200820	INGRAS HYDR M 8X1,25 DRIT	GREASE NIPPLE	GRAISSEUR HYDRAULIQUE	HYDRAUL. FETTBUECHSER M10X1,2	
35	B0E000045	ATTUATORE RETE	NET ACTUATOR	ACTIONNEUR WARNER D13-05B5-06	AKTUATOR WARNER D13 05B506111	
36	F01020164	VITE M12X1,75X70 U5737 8.8ZN	SCREW M12X1,75X70 U5737 8.8ZN	VIS M12X1,75X70 U5737 8.8 ZN	SCHR. M12X1,75X70 U5737 8.8 ZN	TORN. M12X1,75X70 U5737 8.8 ZN
37	F01410076	ROS.M12 13X 20X2,0 U1749 ZN	WASHER	RONDELLE	SCHEIBE	
38	F02200164	COPIGLIA 3X 30 U1336 ZN	SPLIT PIN 3X 30 U1336 ZN			
39	B03500063	PERNO ECCENTRICO	ECCENTRIC PIN	TOURILLON EXCENTRE	EXZENTERZAPFEN	
40	B00920516	DADO M16X 1,5 D985 6S ZN	NUT M16X1,5 D985 6S ZN	ECROU	SELBSTSICHERNDE MUTTER M16-5S	
41	B0C4P0009	FERMO	LOCK	ARRET	BLOCK	
42	F01020517	VITE M12X1,75X 50 U5739 8.8ZN	SCREW	VIS	SCHRAUBE	
43	F01200293	DADO M12X1,75 U5588 CL8 ZN	NUT M12X1,75 U5588 6S ZN	ECROU M12X1,75 U5588 6S ZN	MUTTER M12X1,75 U5588 6S ZN	TUERCA M12X1,75 U5588 6S ZN
44	B0C005200	ATTACCO SENSORE RETE	NET SENSOR COUPLING	ATTELAGE CAPTEUR FILET	SENSORANSCHLUSS	
45	B01000013	RIVETTO STR. 5X18 U9200A AL	RIVET	RIVET	ABREISSNIETEN 6X18	
46	B0E000056	SENSORE PROSSIMITA BALLA M12	PROXIMITY SENSOR	CAPTEUR DE PROXIMITE	ABSTANDSMELDER	
47	B04200820	INGRAS HYDR M 8X1,25 DRIT	GREASE NIPPLE	GRAISSEUR HYDRAULIQUE	HYDRAUL. FETTBUECHSER M10X1,2	
48	B00920412	DADO M12X1,75 D985 8 ZN	NUT	ECROU	SELBSTSICHERNDE MUTTER M12-5S	

TAV_245

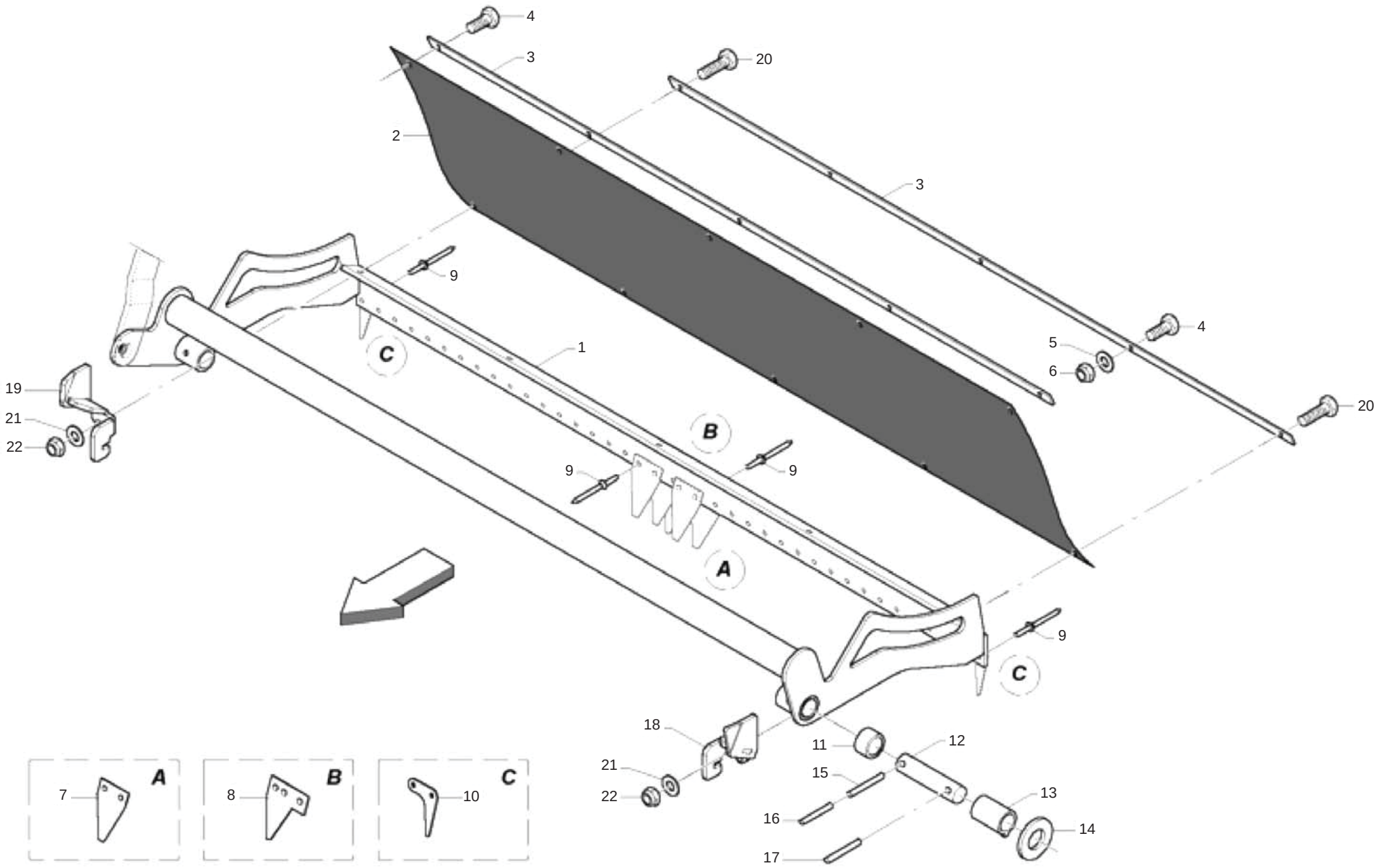

MASCHIO

cod. B0D5P0108

LEGATORE RETE (PARTE 2)
NET BINDER (PART 2)

TAV_245

Pos.	Cod.	Descrizione	Description	Description	Benennung	Descripcion
1	B07SP0279	BRACCIO LAMA	KNIVE HARM	BRAS COUTEAUX	KLINGEARM	
2	B07VP0010	CHIUSURA IN TELA PER LAMA	CLOTH CLOSURE FOR BLADE	FERMETURE EN TOILE POUR LAME	VERSCHLUSS AUS TUCH FUER KLING	
3	B0C002398	PREMIGOMMA	RUBBERHOLDER	PRESSE-PNEU	GUMMIHALTERLEISTE	
4	B00180620	VITE M6X1X20 U5739 8.8ZN	SCREW	VIS	SCHRAUBE	
5	F01410037	ROS.M6 6,4X12,5X1,6 U6592 ZN	WASHER	RONDELLE	BEILAGSCHEIBE 6	
6	B00920106	DADO M6X1 D985 8ZN	NUT	ECROU	SELBSTSICHERNDE MUTTER M6-5S	
7	B07U00012	LAMINO RASSPE D200 LISCIA	PLATE RASPE D200			
8	B0C6P0334	COMPENSO LAMINI SU BRACCIO LAM	SHIM	EPAISSEUR	DICHTUNG	
9	B01000013	RIVETTO STR. 5X18 U9200A AL	RIVET	RIVET	ABREISSNIETEN 6X18	
10	B0C6P0532	TERMINALE LAMA	TERMINALE LAMA.			
11	B013C0012	DISTANZIALE 25.5X33.7X20	SPACER	ENTRETOISE	DISTANZSTUECK	
12	B01300390	SPINA SX BRACCIO TAGLIA RETE	ARM LEFT PIN	EPINE GAUCHE BRAS COUPE-FILET	LINKER NETZSCHNEIDEVORRICHTUNG	
13	B02526852	BUSSOLA NYLON	NYLON BUSH	GALET	BUCHSE	
14	B01522663	SPES. 25 45	SHIM	ENTRETOISE	SCHEIBE	
15	F02100090	SPINA E.P. 5X 40 U6873 C70 BR	ELASTIC PIN 5X40	GOUJON ELASTIQUE 5X40	SPANNHUELSE 5X40	ESPINA ELASTICA 5X40
16	F02100142	SPINA E.P. 8X 40 U6873 C70 BR	ELASTIC PIN 8X40	GOUJON ELASTIQUE 8X40	SPANNHUELSE 8X40	ESPINA ELASTICA 8X40
17	F02100142	SPINA E.P. 8X 40 U6873 C70 BR	ELASTIC PIN 8X40	GOUJON ELASTIQUE 8X40	SPANNHUELSE 8X40	ESPINA ELASTICA 8X40
18	B07SP0245	FERMO DESTRO ALZO	RIGH STOP	ARRET DROIT	BLOCK RECHTS	
19	B07SP0246	FERMO SINISTRO ALZO	LEFT STOP	ARRET GAUCHE	BLOCK LINKS	
20	F01020408	VITE M6X1X30 U5739 8.8ZN	SCR. M6X1X30 U5739 8.8ZN	VIS M 6X1X30	SCHRAUBE M 6X1X30	TORNILLO M 6X1X30
21	F01410037	ROS.M6 6,4X12,5X1,6 U6592 ZN	WASHER	RONDELLE	BEILAGSCHEIBE 6	
22	B00920106	DADO M6X1 D985 8ZN	NUT	ECROU	SELBSTSICHERNDE MUTTER M6-5S	

TAV_250

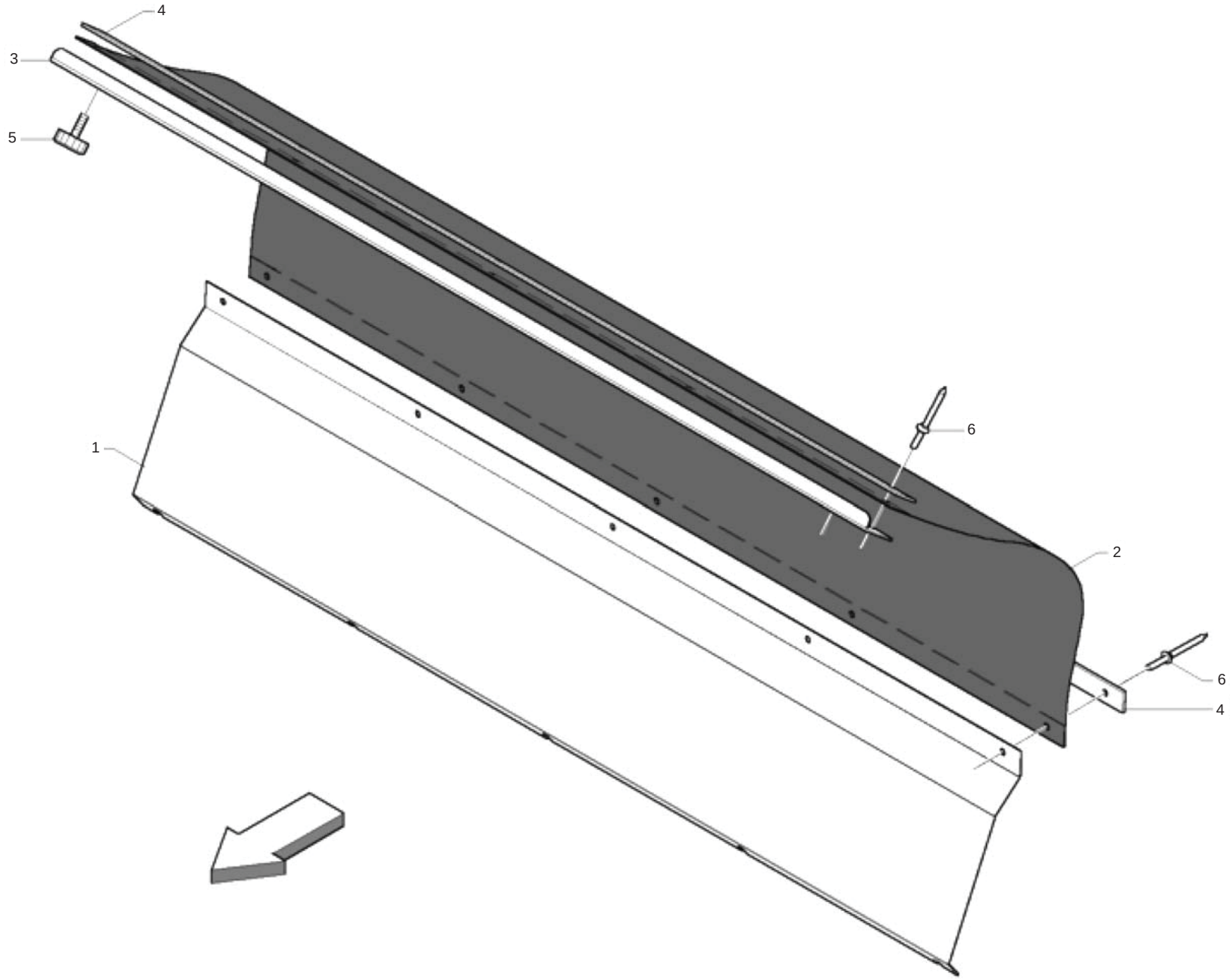

LEGATORE RETE (PARTE 3)
NET BINDER (PART 3)

TAV_250

Pos.	Cod.	Descrizione	Description	Description	Benennung	Descripcion
1	B0C2P0030	PROT. INFERIORE	LOWER PROTECTION	PROTECTION INFERIEURE	SCHUETZ UNTEN	
2	B07V00062	CHIUSURA IN GOMMA	RUBBER CLOSING	FERMETURE EN CAOUTCHOUC	GUMMIVERSCHLUSS	
3	B07MP0017	SOSTEGNO PROT.	PROTECTION SUPPORT	SUPPORT PROTECTION	SCHTZHALTER	
4	B0C002398	PREMIGOMMA	RUBBERHOLDER	PRESSE-PNEU	GUMMIHALTERLEISTE	
5	B07V00106	VOLANTINO M8X15 DIAM. 30	KNOB WHEEL	VOLAN M 8 DIAM. 30X19	HANDRAD	
6	B01000010	RIVETTO STR. 6X12 U9200A AL	RIVET	RIVET	ABREISSNIETEN 6X10	

TAV_255

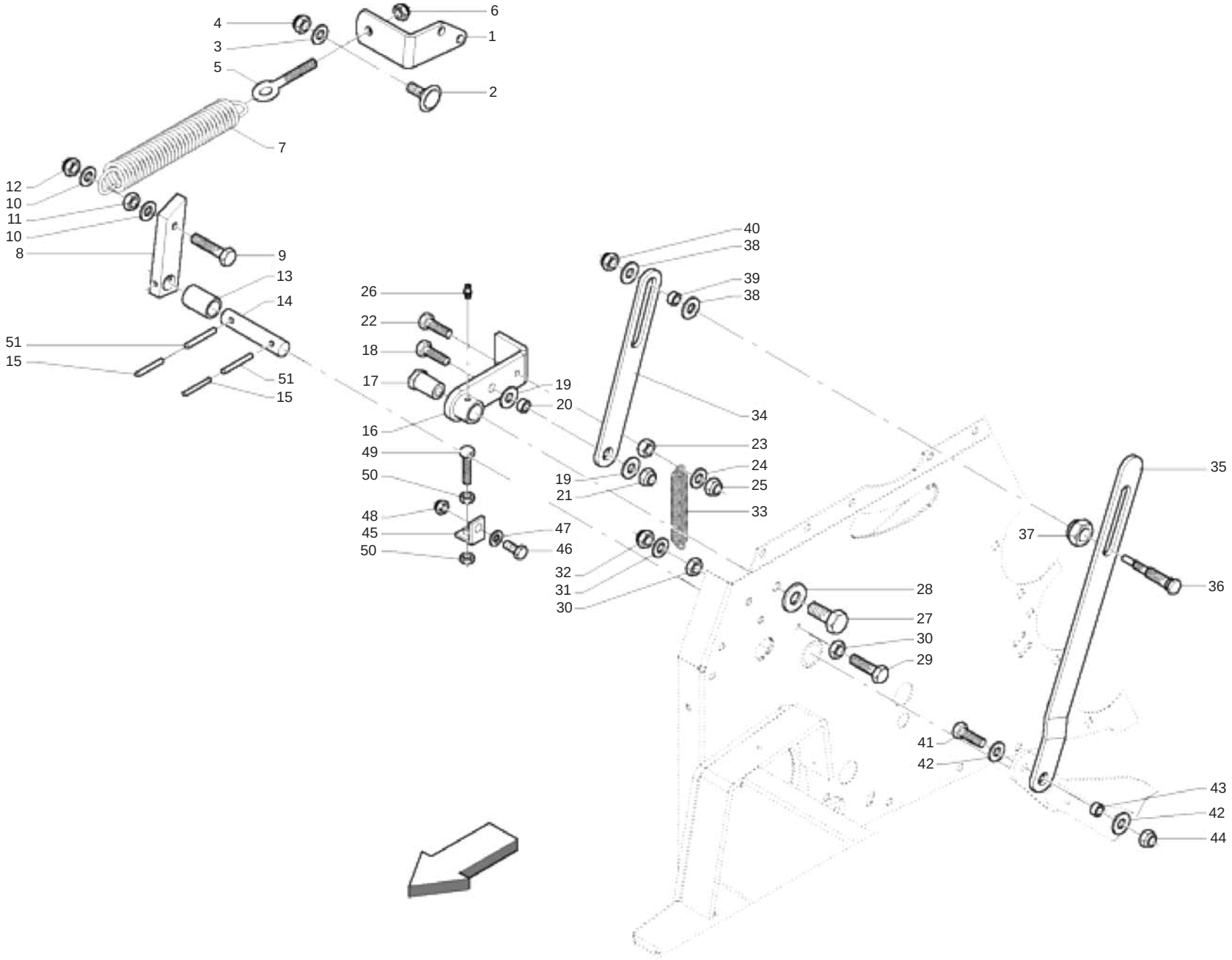

MASCHIO

cod. B0D5P0108

LEGATORE RETE (PARTE 4)
NET BINDER (PART 4)

TAV_255

Pos.	Cod.	Descrizione	Description	Description	Benennung	Descripcion
1	B0C6P0045	ATTACCO MOLLA SGANCIO	SPRING ATTACK RELEASE			
2	B005C0003	VITE TTQST 12X45-8.8 TORNITA	SCREW TTQST 12X45-8.8			
3	F01410076	ROS.M12 13X 20X2,0 U1749 ZN	WASHER	RONDELLE	SCHEIBE	
4	B00920412	DADO M12X1,75 D985 8 ZN	NUT	ECROU	SELBSTSICHERNDE MUTTER M12-5S	
5	B00545168	OCCHIOLO PER TENDITORI M12-DX	EYELET M12	OEIL M12	OSE M12	
6	B00920412	DADO M12X1,75 D985 8 ZN	NUT	ECROU	SELBSTSICHERNDE MUTTER M12-5S	
7	B01822744	MOLLA 49,5 SPIRE	SPRING 49,5 SPIRAL	RESSORT	FEDER	
8	B0C002073	SGANCIO LAMA FFPRO	BLADE UNLOCK	DECROCHET LAME	KLINGENAUSLOSER	
9	F01020519	VITE M12X1,75X 60 U5739 8.8ZN	SCREW M12X1,75X 60 U5739 8.8ZN			
10	F01410076	ROS.M12 13X 20X2,0 U1749 ZN	WASHER	RONDELLE	SCHEIBE	
11	F01200293	DADO M12X1,75 U5588 CL8 ZN	NUT M12X1,75 U5588 6S ZN	ECROU M12X1,75 U5588 6S ZN	MUTTER M12X1,75 U5588 6S ZN	TUERCA M12X1,75 U5588 6S ZN
12	B00920412	DADO M12X1,75 D985 8 ZN	NUT	ECROU	SELBSTSICHERNDE MUTTER M12-5S	
13	B02526852	BUSSOLA NYLON	NYLON BUSH	GALET	BUCHSE	
14	B01301055	SPINA TAGLIA RETE LATO COM.	PIN	GOUPILLE	STECKSTIFT	
15	F02100090	SPINA E.P. 5X 40 U6873 C70 BR	ELASTIC PIN 5X40	GOUJON ELASTIQUE 5X40	SPANNHUELSE 5X40	ESPINA ELASTICA 5X40
16	B07T00026	SGANCIO	RELEASE	DECROCHAGE	AUSLOESUNG	
17	B00500093	PERNO FILETTATO	THREADED PIN	PIVOT FILETE	GEWINDEBOLZEN	
18	F01020514	VITE M12X1,75X40 U5739 8.8ZN	SCR. M12X1,75X40 U5739 8.8ZN	VIS M12X1,75X40 U5739 8.8ZN	SCHRA. M12X1,75X40 U5739 8.8ZN	TORN. M12X1,75X40 U5739 8,8ZN
19	F01420120	ROS.M12 13X 36X2,5 U6593 ZN	WASHER	RONDELLE	SCHEIBE	
20	B01300463	BUSSOLA 12.5X20X10	BUSH	DOUILLE	KOMPASS	
21	B00920412	DADO M12X1,75 D985 8 ZN	NUT	ECROU	SELBSTSICHERNDE MUTTER M12-5S	
22	F01020445	VITE M8X1,25X30 U5739 8.8ZN	SCR. M8X1,25X30 U5739 8.8ZN	VIS M 8X1,25X30 U5739 8.8 ZN	SCHRAU, M8X1,25X30 U5739 8.8ZN	TORN. M8X1,25X30 U5739 8.8 ZN
23	B00710208	DADO M 8X1,25 U5588 6.8 ZN	NUT	ECROU	MUTTER M8-6S	
24	F01410051	ROS.M8 8,4X 17X1,6 U6592 ZN	WASHER M8 8,4X17X1,6 U6592 ZN	RONDELLE	SCHEIBE	
25	B00920208	DADO M8X1 D985 8ZN	NUT M8X1 D985 8ZN	ECROU	SELBSTSICHERNDE MUTTER M8-5S	
26	B04200610	INGRASS.A SFERE M6X1 LUNGO	GREASE NIPPLE	GRAISSEUR HYDRAULIQUE	GERADER SCHMIERNIPPEL M6X1	
27	F01020562	VITE M16X2X30 U5739 8.8ZN	SCR. M16X2X30 U5739 8.8ZN	VIS M16X2X30 U5739 8.8 ZN	SCHRAUBE M16X2X30 U5739 8.8 ZN	TORNILLO M16X2X30 U5739 8.8 ZN
28	B01519319	RALLA 16X38X5	FIFTH WHEEL	BUTEE	SCREIBE	
29	F01020440	VITE M8X1,25X25 U5739 8.8ZN	SCR. M8X1,25X25 U5739 8.8ZN	VIS M8X1,25X25 U5739 8.8 ZN	SCHRAUBE M8X1,25X25U5739 8.8ZN	TORNIL.M8X1,25X25 U5739 8.8 ZN
30	B00710208	DADO M 8X1,25 U5588 6.8 ZN	NUT	ECROU	MUTTER M8-6S	
31	F01410051	ROS.M8 8,4X 17X1,6 U6592 ZN	WASHER M8 8,4X17X1,6 U6592 ZN	RONDELLE	SCHEIBE	
32	B00920208	DADO M8X1 D985 8ZN	NUT M8X1 D985 8ZN	ECROU	SELBSTSICHERNDE MUTTER M8-5S	
33	B01800025	MOLLA 2 13 98T GRUPPO RETE	SPRING	RESSORT	FEDER	
34	B0C002081	LEVA SGANCIO LAMA	BLADE UNLOCK LEVER	LEVIER DECROCHET LAME	KLINGENAUSLOESERHEBEL	
35	B0C2P0150	COLLEGAMENTO LAMA	CONNECTION	CONNEXION	KLINGEKUPPLUNG	
36	B01301103	PERNO CARICA LAMA	BLADE PIN	TOURILLON LAME	ZAPFEN	
37	B00920516	DADO M16X 1,5 D985 6S ZN	NUT M16X1,5 D985 6S ZN	ECROU	SELBSTSICHERNDE MUTTER M16-5S	
38	F01420120	ROS.M12 13X 36X2,5 U6593 ZN	WASHER	RONDELLE	SCHEIBE	
39	B01300463	BUSSOLA 12.5X20X10	BUSH	DOUILLE	KOMPASS	
40	B00920412	DADO M12X1,75 D985 8 ZN	NUT	ECROU	SELBSTSICHERNDE MUTTER M12-5S	
41	F01020512	VITE M12X1,75X35 U5739 8.8ZN	SCR. M12X1,75X35 U5739 8.8ZN	VIS M12X1,75X35 5739 8.8 ZN	SCHR. M12X1,75X35 5739 8.8 ZN	TORN. M12X1,75X35 5739 8.8 ZN
42	F01420120	ROS.M12 13X 36X2,5 U6593 ZN	WASHER	RONDELLE	SCHEIBE	
43	B01300463	BUSSOLA 12.5X20X10	BUSH	DOUILLE	KOMPASS	
44	B00920412	DADO M12X1,75 D985 8 ZN	NUT	ECROU	SELBSTSICHERNDE MUTTER M12-5S	
45	B0C000053	FERMO COLT.	KNIVES STOP	ARRET COUTEAUX	MESSERANSCHLAG	
46	F01020510	VITE M12X1,75X30 U5739 8.8ZN	SCR. M12X1,75X30 U5739 8.8ZN	VIS M12X1,75X30 U5739 8.8ZN	SCHRAU.M12X1,75X30 U5739 8.8ZN	TORN. M12X1,75X30 U5739 8.8ZN
47	F01410076	ROS.M12 13X 20X2,0 U1749 ZN	WASHER	RONDELLE	SCHEIBE	
48	B00920412	DADO M12X1,75 D985 8 ZN	NUT	ECROU	SELBSTSICHERNDE MUTTER M12-5S	
49	F01020487	VITE M10X1,5X60 U5739 8.8ZN	SCR. M10X1,5X60 U5739 8.8ZN	VIS 10X60 5739 8.G ZN	SCHRAUBE 10X60 5739 8.G ZN	TORNILLO 10X60 5739 8.G ZN
50	B00710310	DADO M10X1,25 U5588 6S ZN	NUT	ECROU	MUTTER M10-6S	
51	F02100142	SPINA E.P. 8X 40 U6873 C70 BR	ELASTIC PIN 8X40	GOUJON ELASTIQUE 8X40	SPANNHUELSE 8X40	ESPINA ELASTICA 8X40

TAV_260

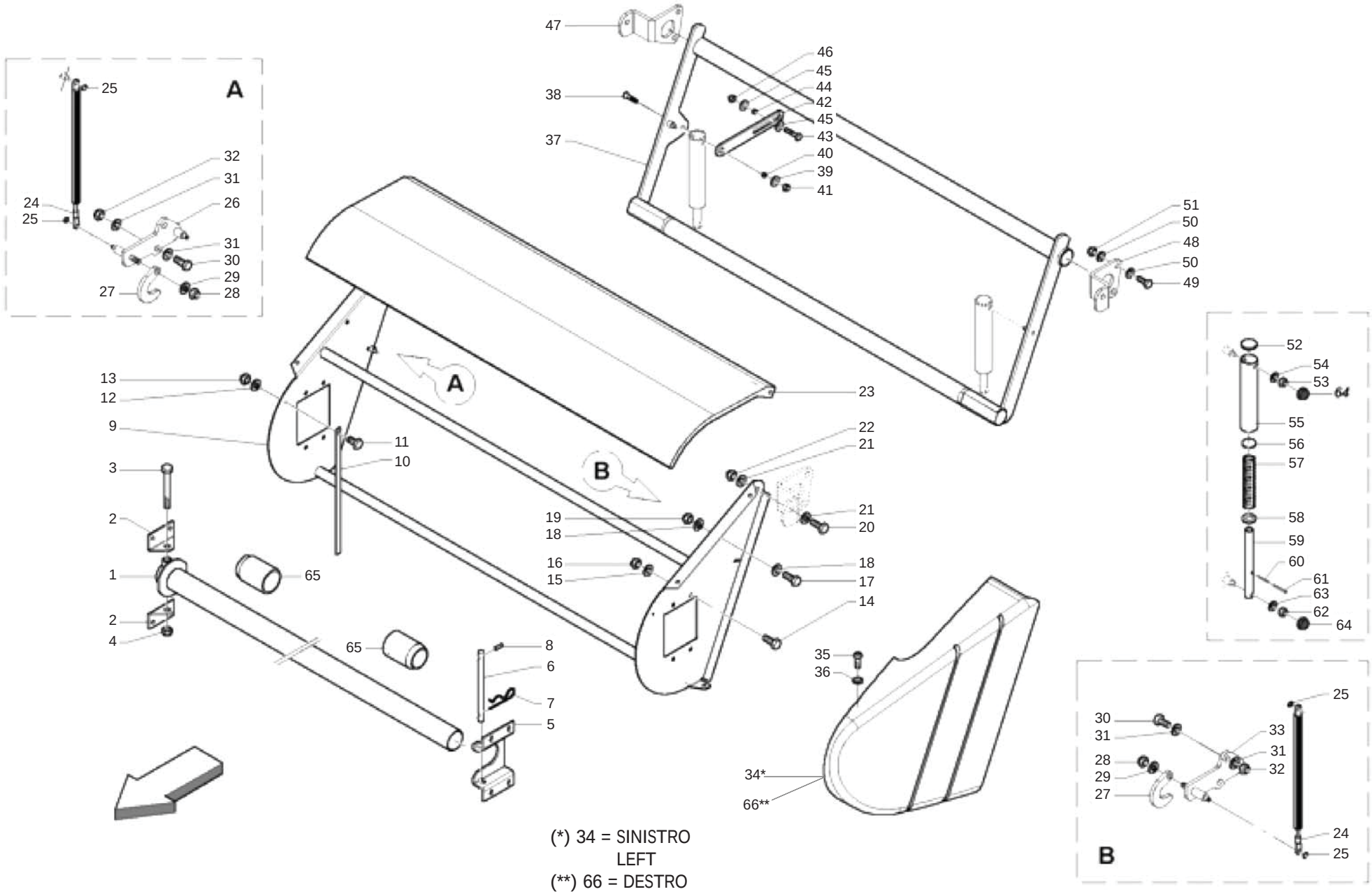

(*) 34 = SINISTRO
LEFT
(**) 66 = DESTRO
RIGHT

LEGATORE RETE (PARTE 5)
NET BINDER (PART 5)

TAV_260

Pos.	Cod.	Descrizione	Description	Description	Benennung	Descripcion
1	B07SP0240	TUBO PORTA ROTOLO	ROLL CARRYING TUBE	TUYAU PORTE-ROULEAU	ROHR ROLLEHALTER	
2	B0C100035	ATTACCO FULCRO	FULCRUM ATTACHMENT	ATTELAGE POINT D APPUI	SCHWENKPUNKTBEFESTIGUNG	
3	F01020268	VITE M16X2X130 U5737 8.8ZN	SCR. M16X2X130 U5737 8.8ZN	VIS M16X2X130 U5737 8.8 ZN	SCHRA. M16X2X130 U5737 8.8 ZN	TORN. M16X2X130 U5737 8.8 ZN
4	B00920516	DADO M16X 1,5 D985 6S ZN	NUT M16X1,5 D985 6S ZN	ECROU	SELBSTSICHERNDE MUTTER M16-5S	
5	B0C100036	ALLOGGIAMENTO TUBO	TUBE SEAT	LOGEMENT TUBE	ROHRSITZ	
6	B01300373	SPINA FERMO TUBO PORTA ROTOLO	PIPE PIN	EPINE ARRET	ARRETIERBOLZEN FUER NETZROLLEN	
7	B01170377	SPINA MOLLA 3 OCCH.SEMPL.ZINC.	PIN	GOUPILLE CLIPS	STIFT	
8	F02100066	SPINA EL.4 X36 DIN 1481 INOX	PIN	GOUPILLE	STIFT	
9	B07T00001	CASSONE RETE	NET STORAGE BOX	RESERVE FILET	NETZROLLENKASTEN	
10	B0C005257	SOSTEGNO COPERCHIO	COVER SUPPORT	SUPPORT COUVERCLE	DECKELHALTER	
11	B00180620	VITE M6X1X20 U5739 8.8ZN	SCREW	VIS	SCHRAUBE	
12	F01410037	ROS.M6 6,4X12,5X1,6 U6592 ZN	WASHER	RONDELLE	BEILAGSCHEIBE 6	
13	B00920106	DADO M6X1 D985 8ZN	NUT	ECROU	SELBSTSICHERNDE MUTTER M6-5S	
14	F01020472	VITE M10X1,5X25 U5739 8.8ZN	SCR. M10X1,5X25 U5739 8.8ZN	VIS M10X1,5X25 U5739 8.8 ZN	SCHRAUBE M10X1,5X25 U5739 8.8	TORNILLO 10X25 U5739 8.8 ZN
15	F01410062	ROS.M10 10,5X 18X 2 U6592 ZN	WASHER M10 10,5X 18X 2 U6592	RONDELLE M10 10,5X18X2 ZN	DICHTUNGSRING M10 10,5X18X2 ZN	RONDANA M10 10,5X18X2 ZN
16	F01230202	DADO M10X1,25 D985 8 ZN	SELF-LOCKING NUT	ECROU NYLSTOP	SELBSTSICHERNDE MUTTER M10-5S	
17	B00181030	VITE M10X1,5 X 30 U5739 8.8ZN	SCREW	VIS	SCHRAUBE	
18	F01410062	ROS.M10 10,5X 18X 2 U6592 ZN	WASHER M10 10,5X 18X 2 U6592	RONDELLE M10 10,5X18X2 ZN	DICHTUNGSRING M10 10,5X18X2 ZN	RONDANA M10 10,5X18X2 ZN
19	F01230202	DADO M10X1,25 D985 8 ZN	SELF-LOCKING NUT	ECROU NYLSTOP	SELBSTSICHERNDE MUTTER M10-5S	
20	B00181030	VITE M10X1,5 X 30 U5739 8.8ZN	SCREW	VIS	SCHRAUBE	
21	F01410062	ROS.M10 10,5X 18X 2 U6592 ZN	WASHER M10 10,5X 18X 2 U6592	RONDELLE M10 10,5X18X2 ZN	DICHTUNGSRING M10 10,5X18X2 ZN	RONDANA M10 10,5X18X2 ZN
22	F01230202	DADO M10X1,25 D985 8 ZN	SELF-LOCKING NUT	ECROU NYLSTOP	SELBSTSICHERNDE MUTTER M10-5S	
23	B07T00005	COPERCHIO	CAP	COUVERCLE	DECKEL	
24	B0H100001	MOLLA A GAS PER RETE L500-750N	GAS SPRING FOR NET L=500-750N	RESSORT GAS POUR FILET L=500-6	GAS GETRIEBENE FEDER L=500-750	
25	B01700008	ANEL. D ARR. ALB. 8-E UNI3653	SEEGER RING	BAGUE SEEGER	SEEGERRING E 8	
26	B07T00011	ATTACCO FRENO DX	RIGHT BRAKE ATTACHMENT	ATTELAGE FREIN DROIT	RECHTE BREMSHALTERUNG	
27	B0C004911	GANCIO	HOOK			
28	F01230202	DADO M10X1,25 D985 8 ZN	SELF-LOCKING NUT	ECROU NYLSTOP	SELBSTSICHERNDE MUTTER M10-5S	
29	F01410062	ROS.M10 10,5X 18X 2 U6592 ZN	WASHER M10 10,5X 18X 2 U6592	RONDELLE M10 10,5X18X2 ZN	DICHTUNGSRING M10 10,5X18X2 ZN	RONDANA M10 10,5X18X2 ZN
30	F01020510	VITE M12X1,75X30 U5739 8.8ZN	SCR. M12X1,75X30 U5739 8.8ZN	VIS M12X1,75X30 U5739 8.8ZN	SCHRAU.M12X1,75X30 U5739 8.8ZN	TORN. M12X1,75X30 U5739 8.8ZN
31	F01410076	ROS.M12 13X 20X2,0 U1749 ZN	WASHER	RONDELLE	SCHEIBE	
32	B00920412	DADO M12X1,75 D985 8 ZN	NUT	ECROU	SELBSTSICHERNDE MUTTER M12-5S	
33	B07T00010	ATTACCO FRENO SX	LEFT BRAKE ATTACHMENT	ATTELAGE FREIN GAUCHE	LINKE BREMSHALTERUNG	
34	B07V00110	BOX RETE SX	LEFT NET BOX	BOITE FILET GAUCHE	LINKER NETZKASTEN	
35	B004N0820	VITE NERA TTEI M 8X 20-10,9	SCREW	VIS	SCHRAUBE TTEI M 8X20-10,9	
36	B07V00119	RONDELLA SOTTOVITE HD 8,5X24X2	WASHER HD 8,5X24X2	RONDELLE	STIFT	
37	B07T00012	BRACCIO FRENA RETE	NET BRAKE ARM	BRAS FREINAGE FILET	NETZBREMSENARM	
38	F01030111	VITE M12X1,75X40 U5933 10.9ZD	SCR. M12X1,75X40 U5933 10.9ZD	VIS 12X40 5933 8.8 ZN	SCHRAUBE 12X40 5933 8.8 ZN	TORNILLO 12X40 5933 8.8 ZN
39	F01420120	ROS.M12 13X 36X2,5 U6593 ZN	WASHER	RONDELLE	SCHEIBE	
40	B01300463	BUSSOLA 12.5X20X10	BUSH	DOUILLE	KOMPASS	
41	B00920412	DADO M12X1,75 D985 8 ZN	NUT	ECROU	SELBSTSICHERNDE MUTTER M12-5S	
42	B0C100051	COLLEGAMENTO FRENO	BRAKE CONNECTON	CONNEXION FREIN	BREMSENKUPPLUNG	
43	F01020519	VITE M12X1,75X 60 U5739 8.8ZN	SCREW M12X1,75X 60 U5739 8.8ZN			
44	B01300463	BUSSOLA 12.5X20X10	BUSH	DOUILLE	KOMPASS	
45	F01420120	ROS.M12 13X 36X2,5 U6593 ZN	WASHER	RONDELLE	SCHEIBE	
46	B00920412	DADO M12X1,75 D985 8 ZN	NUT	ECROU	SELBSTSICHERNDE MUTTER M12-5S	
47	B0C100047	FULCRO FRENO CASSONE DX	BRAKE FULCRUM RIGHT BOX	POINT D APPUI FREIN BOITE DR	BREMSENSCHENKPUNKT RECHTES GEH	
48	B0C100048	FULCRO FRENO CASSONE SX	BRAKE FULCRUM LEFT BOX	POINT D APPUI FREIN BOITE GA	BREMSENSCHENKPUNKT LINKES GEHA	
49	F01020508	VITE M12X1,75X 25 U5739 8.8ZN	SCREW	VIS	SCHRAUBE	
50	F01410076	ROS.M12 13X 20X2,0 U1749 ZN	WASHER	RONDELLE	SCHEIBE	
51	B00920412	DADO M12X1,75 D985 8 ZN	NUT	ECROU	SELBSTSICHERNDE MUTTER M12-5S	
52	B07V00118	TAPPO COPRITUBO 45 X 1-3 01IL	COVER PIPE			
53	B00920412	DADO M12X1,75 D985 8 ZN	NUT	ECROU	SELBSTSICHERNDE MUTTER M12-5S	
54	F01410076	ROS.M12 13X 20X2,0 U1749 ZN	WASHER	RONDELLE	SCHEIBE	
55	B01301079	GUIDA ESTERNA	EXTERNAL GUIDE	GUIDE EXTERIEURE	AEUSSERE FUEHRUNG	
56	B01301081	DISCO 36X5	DISC 36X5	DISQUE 36X5	SCHEIBE 36X5	
57	B01800046	MOLLA 6 30 180C	SPRING	RESSORT	FEDER	

TAV_260

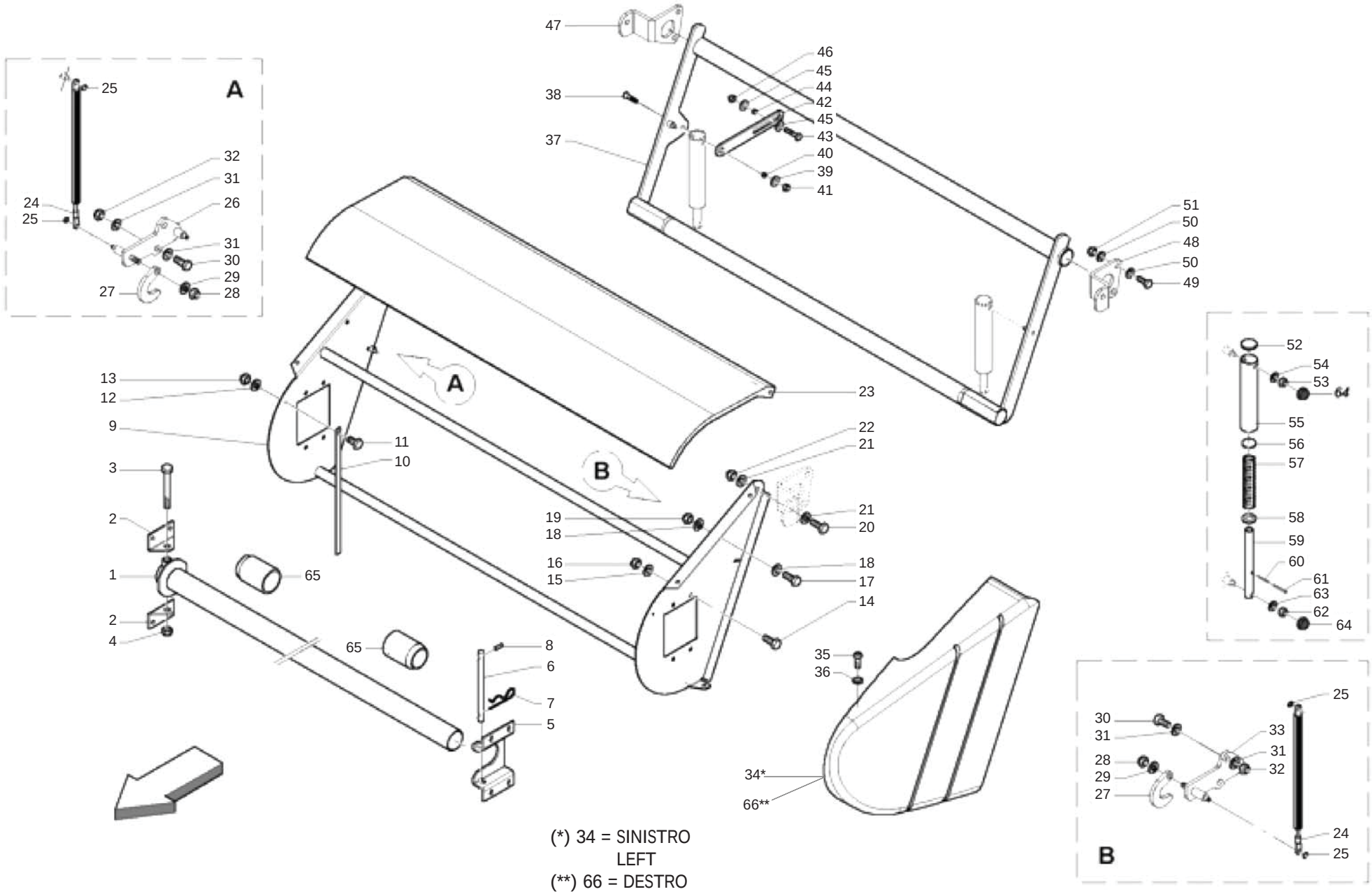

(*) 34 = SINISTRO
LEFT
(**) 66 = DESTRO
RIGHT

LEGATORE RETE (PARTE 5)
NET BINDER (PART 5)

TAV_260

Pos.	Cod.	Descrizione	Description	Description	Benennung	Descripcion
58	B01301082	RALLA 22 36 5	FIFTH WHEEL	BUTEE	DISTANZSCHEIBE 22 36 5	
59	B01301078	GUIDA INFERIORE	LOWER GUIDE	GUIDE INFERIEURE	UNTERE FUEHRUNG	
60	B01110535	SPINA ELAST. 5X 36 SS DIN 1481	PIN	GOUPILLE	STIFT	
61	B01110835	SPINA ELAST. 8X 36 SS DIN 1481	PIN	GOUPILLE	STIFT	
62	B00920412	DADO M12X1,75 D985 8 ZN	NUT	ECROU	SELBSTSICHERNDE MUTTER M12-5S	
63	F01410076	ROS.M12 13X 20X2,0 U1749 ZN	WASHER	RONDELLE	SCHEIBE	
64	B07VC0016	CAP. PROT. DADO M12	GUARD CAP	CHAPEAU DE PROTECTION	SCHUTZDECKEL	
65	B025P0011	TAMPONE ROTOLO RETE	BUSH FOR NET ROLL	BAGUES	SCHLEGEL	
66	B07V00111	BOX RETE DX	RIGHT NET BOX	BOITE FILET DROIT	RECHTE NETZROLLENGEHAEUSE	

TAV_265

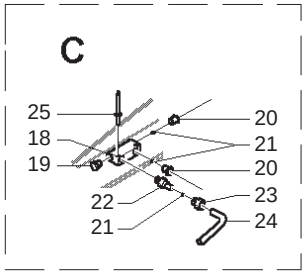
C
25
18
19
20
21
20
22
23
21
24

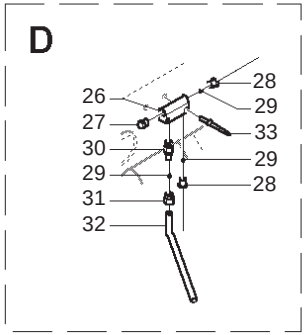
D
26
27
30
29
31
32
28
29
33
29
28

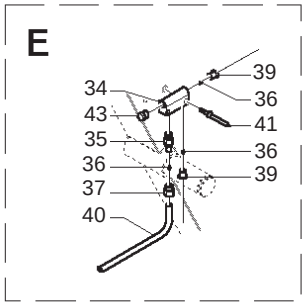
E
34
43
35
36
37
40
39
36
41
36
39

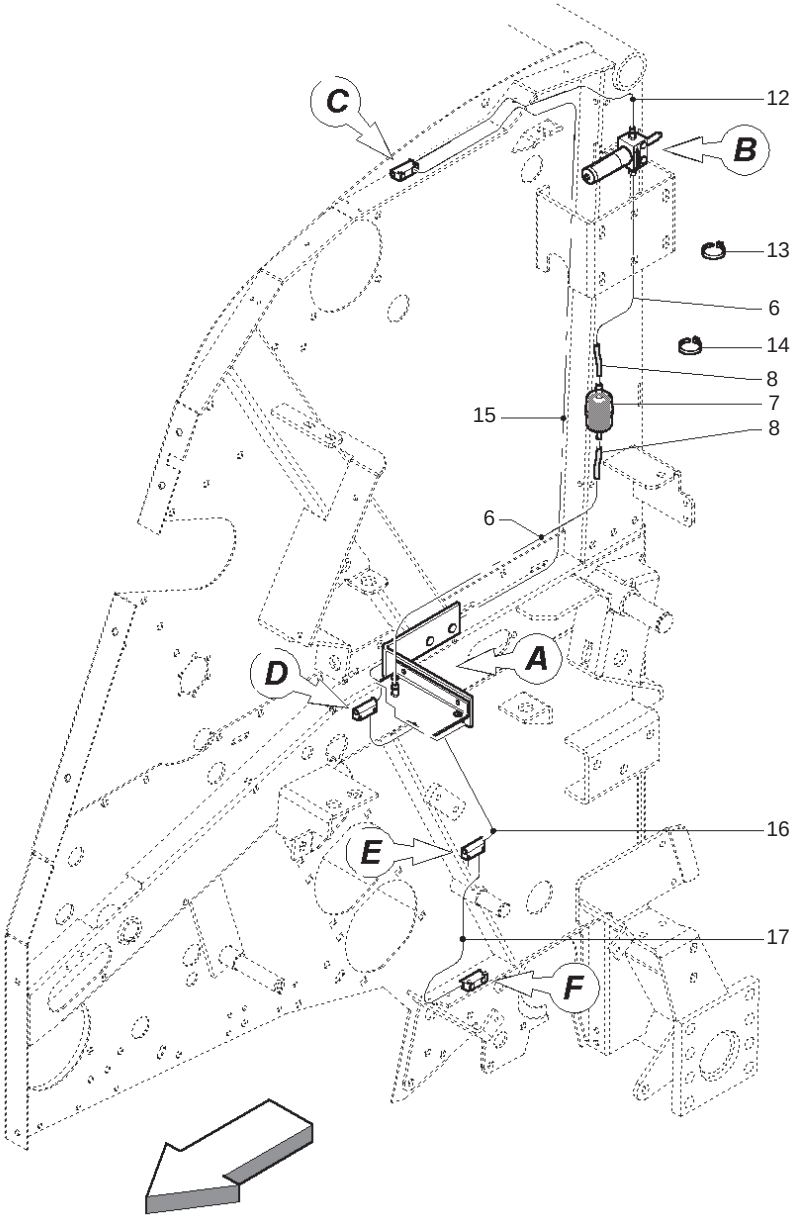
C
B
D
A
E
F
12
13
6
14
8
7
8
15
6
16
17

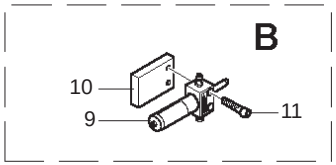
B
10
9
11

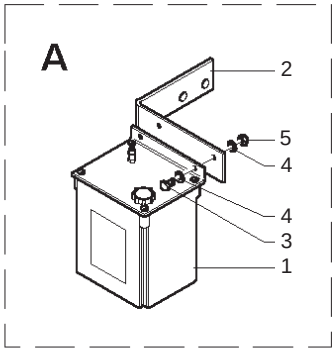
A
2
5
4
4
3
1

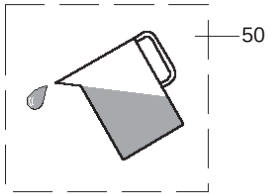
50

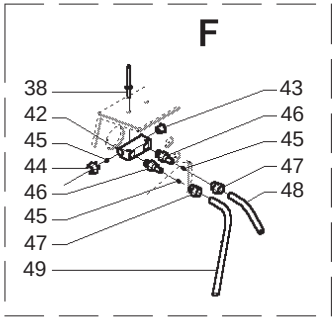
F
38
42
45
44
46
45
47
49
43
46
45
47
48

IMPIANTO OLIATURA AUTOMATICA
AUTOMATIC OILING SYSTEM

TAV_265

Pos.	Cod.	Descrizione	Description	Description	Benennung	Descripcion
1	B04800000	SERB.NYLON PER POMPA PISTONERI	NYLON TANK PUMP PISTONERI	RESERVOIR	OELBEHAELTER	
2	B0C004684	ATTACCO SERBATOIO	TANK ATTACHMENT	ATTELAGE RESERVOIR	OLTANKBEFESTIGUNG	
3	B00180620	VITE M6X1X20 U5739 8.8ZN	SCREW	VIS	SCHRAUBE	
4	F01410037	ROS.M6 6,4X12,5X1,6 U6592 ZN	WASHER	RONDELLE	BEILAGSCHEIBE 6	
5	B00920106	DADO M6X1 D985 8ZN	NUT	ECROU	SELBSTSICHERNDE MUTTER M6-5S	
6	B0H000239	TUBETTO IN NYLON 6 L=500	NYLON HOSE	TUYAU EN NYLON DIAM 6 L=500	NYLON ROEHRCHEN	
7	B0H000022	FILTRO VASCHETTA OLIO	FILTER MAXIFIS	FILTRE ESSENCE	BENZINFILTER MAXIFIS	
8	B0H000023	TUBETTO COLLEGAMENTO FILTRO	CONNECTION PIPE	PETIT TUBE JONCTION FILTRE	VERBINDUNGSSCHLAUCH	
9	B0H400007	POMPA PIST PORT.6CCX10MM CORSA	PISTON PUMPT	POMPE PISTON	KOLBENPUMPE	
10	B0C003928	ATTACCO OLIATORE	LUBRICATION ATTACHMENT	ATTELAGE GRAISSEUR	SCHMIERVORRICHTUNGSBEFESTIGUNG	
11	B00400850	VITE M8X1,25X50 U5931 8.8BR	SCREW	VIS	SCHRAUBE M8X50.8.8	
12	B0H000132	TUBETTO IN NYLON 4 L=750	NYLON PIPE 4 L=750	PETIT TUYAU EN NYLON DIAM 4 L=	KLEINE ROEHRE AUS NYLON J4 L=7	
13	F05150055	FASCETTA LUMEFIX 3,6X180	CLAMP LUMEFIX	BANDE LUMEFIX	MANSCHETTE LUMEFIX	
14	B0E600026	FASCETTA 10,4X 10,7 CE09 NORMA	CLAMP 8,8X9,3 HLS A HILLS	BANDE 8,8X9,3	MANSCHETTE 8,8X9,3 HLS A HILLS	
15	B0H000240	TUBETTO IN NYLON 4 L=1200	NYLON HOSE	TUYAU EN NYLON DIAM 4 L=1200	NYLON ROEHRCHEN	
16	B0H000134	TUBETTO IN NYLON 4 L=650	NYLON PIPE 4 L=550	PETIT TUYAU EN NYLON DIAM 4 L=	NYLONROEHRCHEN 4 L=550	
17	B0H000133	TUBETTO IN NYLON 4 L=420	NYLON PIPE 4 L=420	PETIT TUYAU EN NYLON DIAM 4 L=	NYLONROEHRCHEN 4 L=420	
18	B0H000102	DISTRIBUTORE UNILAT. 4 VIE	UNILATERAL DISTRIBUTOR	DISTRIBUTEUR UNILATERAL 4 VOIE	EINSEITIGER VERTEILER	
19	B0H600015	TAPPORIF.ILC 05.001.0	PLUG	BOUCHON	STOEPSEL	
20	B0H600016	RACC. X TUBO 4RIF.ILC 04.102.	UNION FOR PIPE 4RI	RACCORD POUR TUYAU DIAM 4	VERBINDUNGSTUECK FUR SCHLAUCH	
21	B0H600013	DOPPI CONI PER TUBO 4	DOUBLE CONE FOR PIPE	DOUBLE CONES POUR TUYAU DIAM 4	DOPPELTER KEGEL FUER SCHLAUCH	
22	B0HE00003	INIETTORE TIPO E	TYPE E INJECTOR	GICLEUR TYPE E	SPRITZDUESE	
23	B0H600014	RACCORDO INIETTORE PER TUBO 4	INJECTOR UNION FOR PIPE	RACCORD INJECTEUR POUR TUYAU D	EINSPRITZDUESENANSCHLUSS	
24	B0H000128	TUBETTO IN RAME 4 L=120	COPPER PIPE 4 L=1	PETIT TUYAU EN CUIVRE DIAM. 4	KUPFER ROEHRCHEN 04 L=1	
25	B01000012	RIVETTO STR. 6,4X22 ACCIAIO	RIVET	RIVET	ABREISSNIETEN 6X26	
26	B0H000102	DISTRIBUTORE UNILAT. 4 VIE	UNILATERAL DISTRIBUTOR	DISTRIBUTEUR UNILATERAL 4 VOIE	EINSEITIGER VERTEILER	
27	B0H600015	TAPPORIF.ILC 05.001.0	PLUG	BOUCHON	STOEPSEL	
28	B0H600016	RACC. X TUBO 4RIF.ILC 04.102.	UNION FOR PIPE 4RI	RACCORD POUR TUYAU DIAM 4	VERBINDUNGSTUECK FUR SCHLAUCH	
29	B0H600013	DOPPI CONI PER TUBO 4	DOUBLE CONE FOR PIPE	DOUBLE CONES POUR TUYAU DIAM 4	DOPPELTER KEGEL FUER SCHLAUCH	
30	B0HE00003	INIETTORE TIPO E	TYPE E INJECTOR	GICLEUR TYPE E	SPRITZDUESE	
31	B0H600014	RACCORDO INIETTORE PER TUBO 4	INJECTOR UNION FOR PIPE	RACCORD INJECTEUR POUR TUYAU D	EINSPRITZDUESENANSCHLUSS	
32	B0H000129	TUBETTO IN RAME 4 L=90	COPPER PIPE 4 L=9	PETIT TUYAU EN CUIVRE DIAM. 4	KUPFER ROEHRCHEN 4 L=9	
33	B01000012	RIVETTO STR. 6,4X22 ACCIAIO	RIVET	RIVET	ABREISSNIETEN 6X26	
34	B0H000102	DISTRIBUTORE UNILAT. 4 VIE	UNILATERAL DISTRIBUTOR	DISTRIBUTEUR UNILATERAL 4 VOIE	EINSEITIGER VERTEILER	
35	B0HE00003	INIETTORE TIPO E	TYPE E INJECTOR	GICLEUR TYPE E	SPRITZDUESE	
36	B0H600013	DOPPI CONI PER TUBO 4	DOUBLE CONE FOR PIPE	DOUBLE CONES POUR TUYAU DIAM 4	DOPPELTER KEGEL FUER SCHLAUCH	
37	B0H600014	RACCORDO INIETTORE PER TUBO 4	INJECTOR UNION FOR PIPE	RACCORD INJECTEUR POUR TUYAU D	EINSPRITZDUESENANSCHLUSS	
38	B01000012	RIVETTO STR. 6,4X22 ACCIAIO	RIVET	RIVET	ABREISSNIETEN 6X26	
39	B0H600016	RACC. X TUBO 4RIF.ILC 04.102.	UNION FOR PIPE 4RI	RACCORD POUR TUYAU DIAM 4	VERBINDUNGSTUECK FUR SCHLAUCH	
40	B0H000129	TUBETTO IN RAME 4 L=90	COPPER PIPE 4 L=9	PETIT TUYAU EN CUIVRE DIAM. 4	KUPFER ROEHRCHEN 4 L=9	
41	B01000012	RIVETTO STR. 6,4X22 ACCIAIO	RIVET	RIVET	ABREISSNIETEN 6X26	
42	B0H000102	DISTRIBUTORE UNILAT. 4 VIE	UNILATERAL DISTRIBUTOR	DISTRIBUTEUR UNILATERAL 4 VOIE	EINSEITIGER VERTEILER	
43	B0H600015	TAPPORIF.ILC 05.001.0	PLUG	BOUCHON	STOEPSEL	
44	B0H600016	RACC. X TUBO 4RIF.ILC 04.102.	UNION FOR PIPE 4RI	RACCORD POUR TUYAU DIAM 4	VERBINDUNGSTUECK FUR SCHLAUCH	
45	B0H600013	DOPPI CONI PER TUBO 4	DOUBLE CONE FOR PIPE	DOUBLE CONES POUR TUYAU DIAM 4	DOPPELTER KEGEL FUER SCHLAUCH	
46	B0HE00003	INIETTORE TIPO E	TYPE E INJECTOR	GICLEUR TYPE E	SPRITZDUESE	
47	B0H600014	RACCORDO INIETTORE PER TUBO 4	INJECTOR UNION FOR PIPE	RACCORD INJECTEUR POUR TUYAU D	EINSPRITZDUESENANSCHLUSS	
48	B0H000129	TUBETTO IN RAME 4 L=90	COPPER PIPE 4 L=9	PETIT TUYAU EN CUIVRE DIAM. 4	KUPFER ROEHRCHEN 4 L=9	
49	B0H000131	TUBETTO IN RAME 4 L=190	COPPER PIPE 4 L=1	PETIT TUYAU EN CUIVRE DIAM 4 L	KUPFER ROEHRCHEN 4 L=1	
50	F03260093	OLIO AGIP OSO 100 ISO-L-KM	OIL AGIP OSO 100 ISO-L-KM			

TAV_275

(*) 17, 18 = SINISTRO
LEFT
(**) 16, 49 = DESTRO
RIGHT

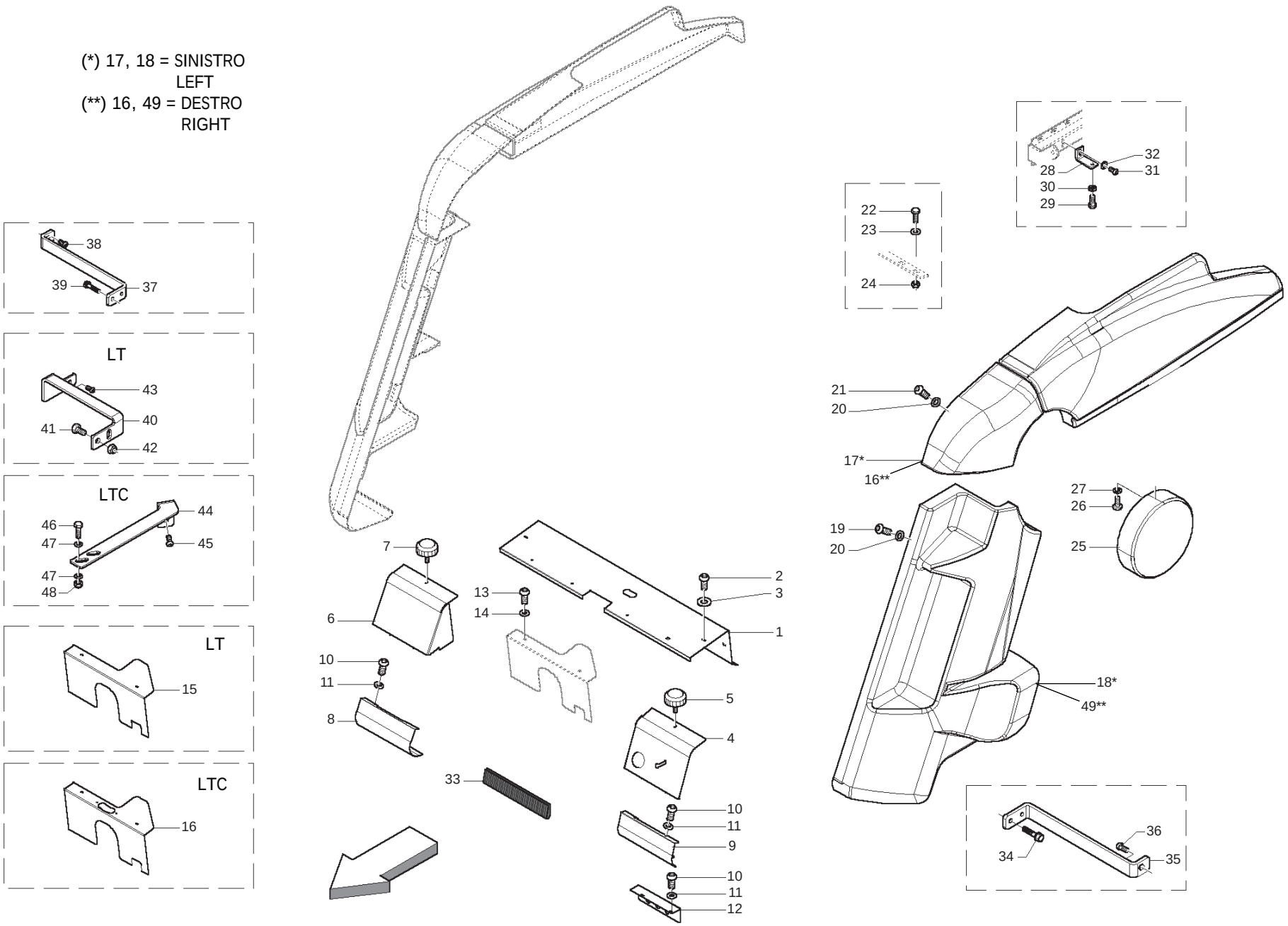

MASCHIO

cod. B0D5P0108

CARTER ANTERIORI
FRONT CARTER

TAV_275

Pos.	Cod.	Descrizione	Description	Description	Benennung	Descripcion
1	B0C004454	PROT. SUPERIORE	HIGHER PROTECTION	PROTECTION SUPERIEURE	SCHUETZ OBEN	
2	F01030208	VITE TTEI M 8X 20-10,9 UMBRAKO	SCREW	VIS	SCHRAUBE TTEI M 8X 20-10.9	
3	F01420048	ROS.M8 8,4X 24X 2 U6593 ZN	WASHER	RONDELLE	SCHEIBE	
4	B0C3P0026	SPORTELLO LT	LT DOOR	GUICHET LT	FENSTER LT	
5	B07V00106	VOLANTINO M8X15 DIAM. 30	KNOB WHEEL	VOLAN M 8 DIAM. 30X19	HANDRAD	
6	B0C005160	SPORTELLO DX SZA FORO MANOMET	RIGHT DOOR WITHOUT HOLE	GUICHET DROIT SANS TROU	FENSTER RECHTS	
7	B07V00106	VOLANTINO M8X15 DIAM. 30	KNOB WHEEL	VOLAN M 8 DIAM. 30X19	HANDRAD	
8	B0C004622	CHIUSURA INFERIORE DX	RIGHT LOWER CLOSURE	FERMETURE INFERIEURE DROITE	VERSCHLUSS RECHTS	
9	B0C005254	CHIUSURA INFERIORE SX	LEFT LOWER CLOSURE	FERMETURE INFERIEURE GAUCHE	VERSCHLUSS UNTEN	
10	B00470620	VITE TTEI M 6X 20-8.8 UNBRA	SCREW	VIS	SCHRAUBE TTEI M6X20-10.9	
11	F01410037	ROS.M6 6,4X12,5X1,6 U6592 ZN	WASHER	RONDELLE	BEILAGSCHEIBE 6	
12	B0C004370	TERMINALE CHIUSURA INF.SX	TERMINALE CHIUSURA INF.SX .			
13	B00470815	VITE TTEI M 8X 15-8.8 UNBRA	SCREW	VIS	SCHRAUBE VERZINKT TTEI M8X15 8	
14	F01410037	ROS.M6 6,4X12,5X1,6 U6592 ZN	WASHER	RONDELLE	BEILAGSCHEIBE 6	
15	B0C004952	CARTER CENTRALE	CENTRAL GUARD	CARTER CENTRALE	ZENTRAL ABDECKPLATTE	
16	B07VP0005	CAPPELLO DX LT	RIGHT CAP LT	CHAPEAU DROIT LT	DECKEL RECHTS LT	
17	B07VP0006	CAPPELLO SX LT	LEFT CAP LT	CHAPEAU GAUCHE LT	DECKEL LINKS LT	
18	B07VP0008	SPIGOLO ANT. SX LT	LEFT FRONT COIN LT	COIN ANTERIEUR GAUCHE LT	KANTE VORN LINKS LT	
19	B004N0820	VITE NERA TTEI M 8X 20-10,9	SCREW	VIS	SCHRAUBE TTEI M 8X20-10,9	
20	B07V00119	RONDELLA SOTTOVITE HD 8,5X24X2	WASHER HD 8,5X24X2	RONDELLE	STIFT	
21	B004N0820	VITE NERA TTEI M 8X 20-10,9	SCREW	VIS	SCHRAUBE TTEI M 8X20-10,9	
22	F01020063	VITE M8X1,25X35 U5737 8.8ZN	SCR. M8X1,25X35 U5737 8.8ZN	VIS M8X1,25X35 U5737 8.8ZN	SCHRAU. M8X1,25X35 U5737 8.8ZN	TORN. M8X1,25X35 U5737 8.8ZN
23	F01410051	ROS.M8 8,4X 17X1,6 U6592 ZN	WASHER M8 8,4X17X1,6 U6592 ZN	RONDELLE	SCHEIBE	
24	B00920208	DADO M8X1 D985 8ZN	NUT M8X1 D985 8ZN	ECROU	SELBSTSICHERNDE MUTTER M8-5S	
25	B07V00104	BOTTONE	BUTTON	BOUTON	KNOPF	
26	F01020380	VITE M5X0,8X20 U5739 8.8ZN	SCR. M5X0,8X20 U5739 8.8ZN	VIS M5X0,8X20 U5739 8.8ZN	SCHRAUBE M5X0,8X20 U5739 8.8ZN	TORNILLO M5X0,8X20 U5739 8.8ZN
27	F01420023	ROS.M5 5,3X 15X1,5 U6593 ZN	WASHER M5 5,3X 15X1,5 U6593			
28	B0C005196	SOSTEGNO CARTER SUPERIORI	SUPPORT TOP CARTER			
29	B004N0820	VITE NERA TTEI M 8X 20-10,9	SCREW	VIS	SCHRAUBE TTEI M 8X20-10,9	
30	F01410051	ROS.M8 8,4X 17X1,6 U6592 ZN	WASHER M8 8,4X17X1,6 U6592 ZN	RONDELLE	SCHEIBE	
31	B004N0820	VITE NERA TTEI M 8X 20-10,9	SCREW	VIS	SCHRAUBE TTEI M 8X20-10,9	
32	F01410051	ROS.M8 8,4X 17X1,6 U6592 ZN	WASHER M8 8,4X17X1,6 U6592 ZN	RONDELLE	SCHEIBE	
33	B07VP0011	PROT. ASOLA	HOLE PROTECTION	PROTECTION FENTE	LOCHSCHUTZ	
34	B00370001	VITE TE M 8X16 A SEZ.TRILOBATA	SCREW TRE M 8X16 SEZ TROUBLED	VIS	SCHRAUBE M 8X15	
35	B0C005197	SOSTEGNO LAT. DX CARTER	GUARD RIGHT SIDE SUPPORT	SUPPORT LATERAL DROIT CARTER	SEITENANSCHLUSS	
36	B004N0820	VITE NERA TTEI M 8X 20-10,9	SCREW	VIS	SCHRAUBE TTEI M 8X20-10,9	
37	B0C005197	SOSTEGNO LAT. DX CARTER	GUARD RIGHT SIDE SUPPORT	SUPPORT LATERAL DROIT CARTER	SEITENANSCHLUSS	
38	B004N0820	VITE NERA TTEI M 8X 20-10,9	SCREW	VIS	SCHRAUBE TTEI M 8X20-10,9	
39	B00370001	VITE TE M 8X16 A SEZ.TRILOBATA	SCREW TRE M 8X16 SEZ TROUBLED	VIS	SCHRAUBE M 8X15	
40	B0C4P0003	SOSTEGNO SPIGOLO INFERIORE DX	RIGHT LOWER EDGE SUPPORT	SUPPORT COIN INFERIEUR DROIT	KANTEHALTER	
41	B00181255	VITE M12X 55-8.8 UNI 5739	SCREW	VIS	VERZINKTE SCHRAUBE	
42	B00920412	DADO M12X1,75 D985 8 ZN	NUT	ECROU	SELBSTSICHERNDE MUTTER M12-5S	
43	B004N0820	VITE NERA TTEI M 8X 20-10,9	SCREW	VIS	SCHRAUBE TTEI M 8X20-10,9	
44	B0C4P0004	SOSTEGNO SPIGOLO INFERIORE DX	CUT RIGHT LOWER EDGE SUPPORT			
45	B004N0820	VITE NERA TTEI M 8X 20-10,9	SCREW	VIS	SCHRAUBE TTEI M 8X20-10,9	
46	F01020510	VITE M12X1,75X30 U5739 8.8ZN	SCR. M12X1,75X30 U5739 8.8ZN	VIS M12X1,75X30 U5739 8.8ZN	SCHRAU.M12X1,75X30 U5739 8.8ZN	TORN. M12X1,75X30 U5739 8.8ZN
47	F01410076	ROS.M12 13X 20X2,0 U1749 ZN	WASHER	RONDELLE	SCHEIBE	
48	B00920412	DADO M12X1,75 D985 8 ZN	NUT	ECROU	SELBSTSICHERNDE MUTTER M12-5S	
49	B07VP0007	SPIGOLO ANT. DX LT	RIGHT FRONT COIN LT	COIN ANTERIEUR DROIT LT	KANTE VORN RECHTS LT	

TAV_280

(*) 1, 3, 8, 9, 13, 41 = SINISTRO
LEFT
(**) 45, 46, 47, 48, 49, 50 = DESTRO
RIGHT

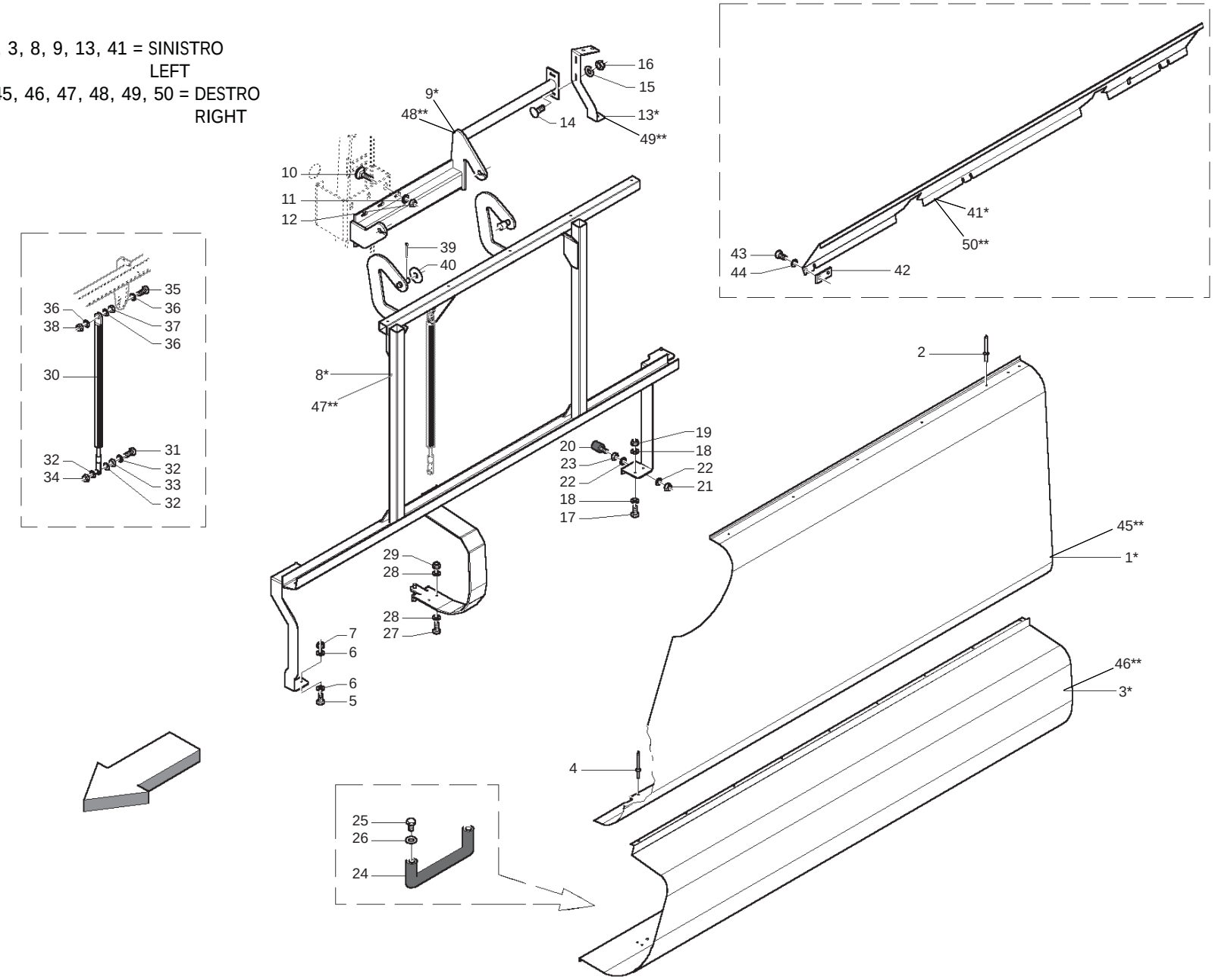

CARTER LATERALI
SIDE CARTER

TAV_280

Pos.	Cod.	Descrizione	Description	Description	Benennung	Descripcion
1	B0C004649	CORPO CARTER SX 265	LEFT CARDER BODY 265	CORPS CARTER GAUCHE 265	KOERPER CARTER LINKS 265	
2	B01000010	RIVETTO STR. 6X12 U9200A AL	RIVET	RIVET	ABREISSNIETEN 6X10	
3	B0C004694	CASSONE ROTOLO SX 265	LEFT ROLLER BOX 265	RESERVE ROULEAU GAUCHE 265	ROLLEHALTER LINKS 265	
4	B01000011	RIVETTO STR. 6X12 U9200A AL	RIVET 6X12 U9200A AL	RIVET	ABREISSNIETEN 6X15	
5	B00180620	VITE M6X1X20 U5739 8.8ZN	SCREW	VIS	SCHRAUBE	
6	F01410037	ROS.M6 6,4X12,5X1,6 U6592 ZN	WASHER	RONDELLE	BEILAGSCHEIBE 6	
7	B00920106	DADO M6X1 D985 8ZN	NUT	ECROU	SELBSTSICHERNDE MUTTER M6-5S	
8	B07SP0070	TELAIO CARTER SX LT	LT LEFT GUARD FRAME	CHASSIS CARTER GAUCHE LT	RAHMEN CARTER LINKS LT	
9	B07SP0068	ATTACCO CERNIERA CARTER SX LT	LT LEFT GAURD ATTACHMENT	ATTELAGE CHARNIERE CARTER GAUC	SCHARNIERANSCHLUSS CARTER LINK	
10	B00523421	VITE SPECIALE TTQST M12X35-8.8	SPECIAL SCREW	VIS SPCIALE	SCHRAUBE TTQST M12X 35-8.8	
11	F01410076	ROS.M12 13X 20X2,0 U1749 ZN	WASHER	RONDELLE	SCHEIBE	
12	B00920412	DADO M12X1,75 D985 8 ZN	NUT	ECROU	SELBSTSICHERNDE MUTTER M12-5S	
13	B0C005039	SOSTEGNO SX CAPPELLO	CAP LEFT SUPPORT	SUPPORT GAUCHE CHAPEAU	HALTER LINKS DECKEL	
14	F01060202	VITE M8X1,25X25 U5731 4.6ZN	SCR. M8X1,25X25 U5731 4.6ZN	VIS M8X1,25X25 U5731 4.6	DUEBEL M8X1,25X25 U5731 4.6 ZN	TORNILLO M8X1,25X25 U5731 4.6
15	F01420048	ROS.M8 8,4X 24X 2 U6593 ZN	WASHER	RONDELLE	SCHEIBE	
16	B00920208	DADO M8X1 D985 8ZN	NUT M8X1 D985 8ZN	ECROU	SELBSTSICHERNDE MUTTER M8-5S	
17	B00180620	VITE M6X1X20 U5739 8.8ZN	SCREW	VIS	SCHRAUBE	
18	F01410037	ROS.M6 6,4X12,5X1,6 U6592 ZN	WASHER	RONDELLE	BEILAGSCHEIBE 6	
19	B00920106	DADO M6X1 D985 8ZN	NUT	ECROU	SELBSTSICHERNDE MUTTER M6-5S	
20	B01800082	SILENT BLOCK 30X30-M8X25	SILENT BLOCK 30X30-M8X20	SILENT BLOCK 30X30-M8X20	SILENTBLOCK 30X30-M8X20	
21	B00920208	DADO M8X1 D985 8ZN	NUT M8X1 D985 8ZN	ECROU	SELBSTSICHERNDE MUTTER M8-5S	
22	F01410051	ROS.M8 8,4X 17X1,6 U6592 ZN	WASHER M8 8,4X17X1,6 U6592 ZN	RONDELLE	SCHEIBE	
23	B00710208	DADO M 8X1,25 U5588 6.8 ZN	NUT	ECROU	MUTTER M8-6S	
24	B07V00117	MANIGL.01M20120D DITTA THENAR	HANDLE 01M20120D FROM THENAR	POIGNEE 01M20120D	GRIFF	
25	F01020432	VITE M8X1,25X16 U5739 8.8ZN	SCR. M8X1,25X16 U5739 8.8ZN	VIS M8 X1,25X16 U5739 8.8 ZN	SCHRAUBE M8X1,25X16U5739 8.8ZN	TORNILLO M8X1,25X16U5739 8.8ZN
26	F01410051	ROS.M8 8,4X 17X1,6 U6592 ZN	WASHER M8 8,4X17X1,6 U6592 ZN	RONDELLE	SCHEIBE	
27	B00180620	VITE M6X1X20 U5739 8.8ZN	SCREW	VIS	SCHRAUBE	
28	F01410037	ROS.M6 6,4X12,5X1,6 U6592 ZN	WASHER	RONDELLE	BEILAGSCHEIBE 6	
29	B00920106	DADO M6X1 D985 8ZN	NUT	ECROU	SELBSTSICHERNDE MUTTER M6-5S	
30	B0H100003	MOLLA A GAS 1900N	GAS SPRING 1900N	RESSORT GAS 1900 N	GASFEDER FUR NETZ	
31	F01020114	VITE M10X1,5X50 U5737 8.8ZN	SCR. M10X1,5X50 U5737 8.8ZN	VIS M10X 1,5X50 U5737 8.8 ZN	SCHRA.M10X 1,5X50 U5737 8.8 ZN	TORN. M10X 1,5X50 U5737 8.8 ZN
32	F01410062	ROS.M10 10,5X 18X 2 U6592 ZN	WASHER M10 10,5X 18X 2 U6592	RONDELLE M10 10,5X18X2 ZN	DICHTUNGSRING M10 10,5X18X2 ZN	RONDANA M10 10,5X18X2 ZN
33	B00710310	DADO M10X1,25 U5588 6S ZN	NUT	ECROU	MUTTER M10-6S	
34	F01230202	DADO M10X1,25 D985 8 ZN	SELF-LOCKING NUT	ECROU NYLSTOP	SELBSTSICHERNDE MUTTER M10-5S	
35	F01020114	VITE M10X1,5X50 U5737 8.8ZN	SCR. M10X1,5X50 U5737 8.8ZN	VIS M10X 1,5X50 U5737 8.8 ZN	SCHRA.M10X 1,5X50 U5737 8.8 ZN	TORN. M10X 1,5X50 U5737 8.8 ZN
36	F01410062	ROS.M10 10,5X 18X 2 U6592 ZN	WASHER M10 10,5X 18X 2 U6592	RONDELLE M10 10,5X18X2 ZN	DICHTUNGSRING M10 10,5X18X2 ZN	RONDANA M10 10,5X18X2 ZN
37	B00710310	DADO M10X1,25 U5588 6S ZN	NUT	ECROU	MUTTER M10-6S	
38	F01020114	VITE M10X1,5X50 U5737 8.8ZN	SCR. M10X1,5X50 U5737 8.8ZN	VIS M10X 1,5X50 U5737 8.8 ZN	SCHRA.M10X 1,5X50 U5737 8.8 ZN	TORN. M10X 1,5X50 U5737 8.8 ZN
39	F02200164	COPIGLIA 3X 30 U1336 ZN	SPLIT PIN 3X 30 U1336 ZN			
40	F01420096	ROS.M16 16,5X 42X 4 U6593 ZN	WASHER M16 17X48X4 U6593 ZN			
41	B0C3P0046	PROT.INTERNA SX CARTER-LT	GUARD LT LEFT INNER PROTECTION	PROTECTION INT. GAUCHE CARTER	SCHUETZ LINKS CARTER-LT	
42	B0C6P0112	SOSTEGNO PROT. INTERNA	INNER PROTECTION SUPPORT	SUPPORT PROTECTION INTERIEURE	SCHUETZHALTER	
43	B00180625	VITE M6X1X 25 U5739 8.8ZN	SCREW	VIS	SCHRAUBE	
44	F01410037	ROS.M6 6,4X12,5X1,6 U6592 ZN	WASHER	RONDELLE	BEILAGSCHEIBE 6	
45	B0C004650	CORPO CARTER DX 265	RIGHT CARTER BODY 265	CORPS CARTER DROIT 265	KOERPER CARTER RECHTS 265	
46	B0C004695	CASSONE ROTOLO DX 265	RIGHT ROLLER BOX 265	RESERVE ROULEAU DROIT 265	ROLLEHALTER RECHTS 265	
47	B07SP0071	TELAIO CARTER DX LT	LT RIGHT GUARD FRAME	CHASSIS CARTER DROIT LT	RAHMEN CARTER RECHTS LT	
48	B07SP0069	ATTACCO CERNIERA CARTER DX LT	LT RIGHT GUARD ATTACHMENT	ATTELAGE CHARNIERE CARTER DROI	SCHARNIERANSCHLUSS CARTER RECH	
49	B0C005040	SOSTEGNO DX CAPPELLO	RIGHT CAP SUPPORT	SUPPORT DROIT CHAPEAU	HALTER RECHTS DECKEL	
50	B0C3P0047	PROT.INTERNA DX CARTER-LT	GUARD RIGHT INNER PROTECTION -	PROTECTION INT. DROIT CARTER L	SCHUETZ RECHTS CARTER -LT	

TAV_285

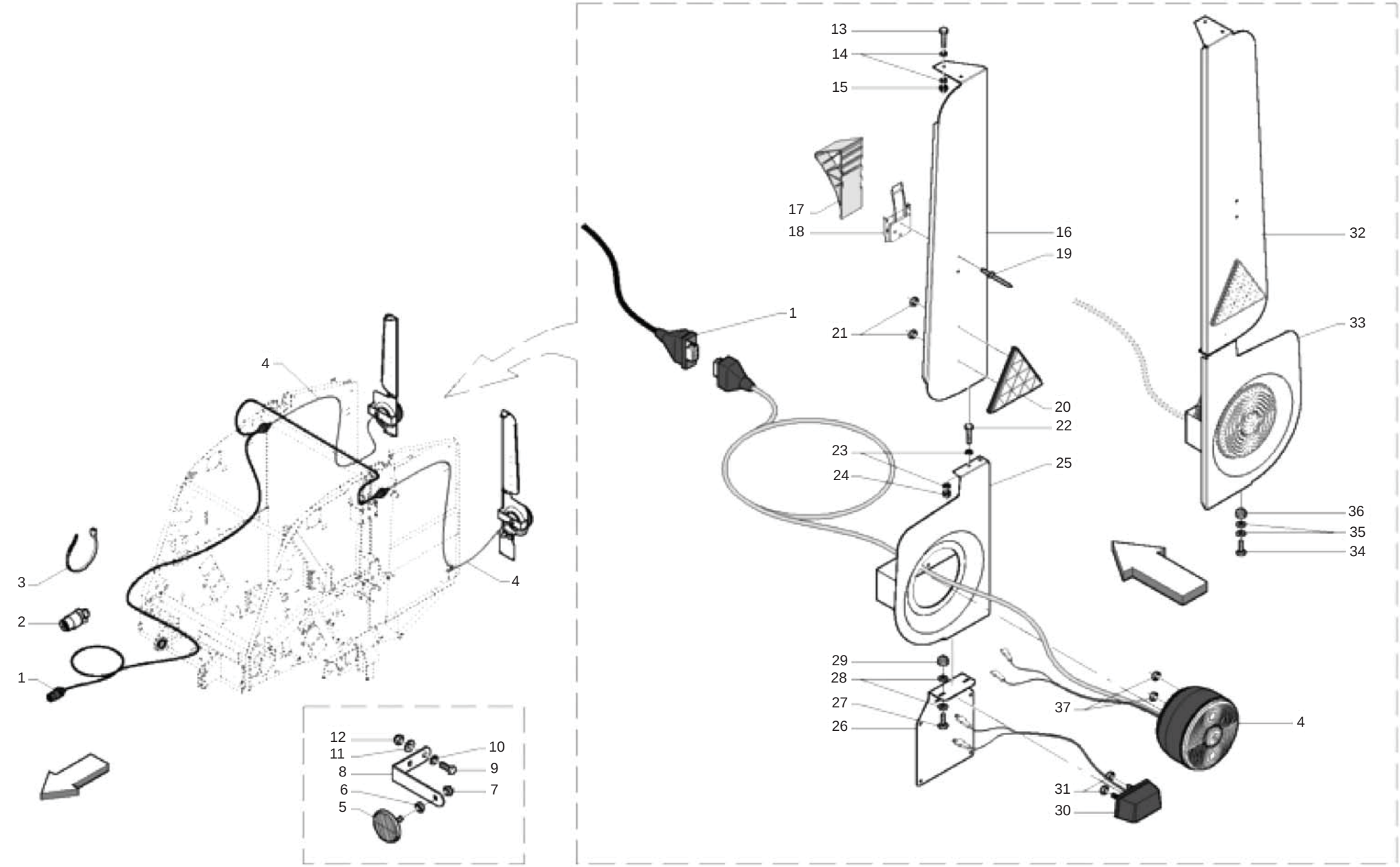

MASCHIO

cod. B0D5P0108

IMPIANTO LUCI + CUNEI
LIGHTS PLANT + CHOCKS

TAV_285

Pos.	Cod.	Descrizione	Description	Description	Benennung	Descripcion
1	B0E000137	SPINA 7 POLI E CABLAGGIO EXTRE	7-POLES PLUG AND WIRING HARNES			
2	B0E000011	SPINA 7 POL.12V VST_018 REMPA	7 POLE PLUG 12 V	GOUPILLE A 7 POLES 12V	7 POL-STECKER 12 V	
3	F05150055	FASCETTA LUMEFIX 3,6X180	CLAMP LUMEFIX	BANDE LUMEFIX	MANSCHETTE LUMEFIX	
4	B0E000136	FANALE POST. EXTREME	EXTREME BACK LAMP	FEU EN ARRIERE EXTREME	BELEUCHTUNG HINTEN EXTREME	
5	B0E000026	CATADIOTRO ROTONDO BIANCO	WHITE ROUND RETROREFLECTOR	CATADIOPTRE ROND BLANC	RUNDER WEISSER RUECKSTRAHLER	
6	F01200220	DADO M5X0,8 U5588 CL8 ZN	NUT M5X0,8 U5588 6.8ZN	ECROU 5 UNI 5588 6.8 ZN	MUTTER 5 UNI 5588 6.8 ZN	TUERCA 5 UNI 5588 6.8 ZN
7	B00920005	DADO AUTOB.BASSO M 5-5S DIN985	NUT	ECROU	SELBSTSICHERNDE MUTTER M5-5S	
8	B0C6P0034	SOSTEGNO CATARIFRANGENTE	REFLEX REFLECTO SUPPORT	SUPPORT CATADIOPTRE	HALTER RUECKSTRAHLER	
9	B00180620	VITE M6X1X20 U5739 8.8ZN	SCREW	VIS	SCHRAUBE	
10	F01410037	ROS.M6 6,4X12,5X1,6 U6592 ZN	WASHER	RONDELLE	BEILAGSCHEIBE 6	
11	F01420035	ROS.M6 6,4X 18X1,6 U6593 ZN	WASHER	RONDELLE	SCHEIBE	
12	B00920106	DADO M6X1 D985 8ZN	NUT	ECROU	SELBSTSICHERNDE MUTTER M6-5S	
13	B00180620	VITE M6X1X20 U5739 8.8ZN	SCREW	VIS	SCHRAUBE	
14	F01410037	ROS.M6 6,4X12,5X1,6 U6592 ZN	WASHER	RONDELLE	BEILAGSCHEIBE 6	
15	B00920106	DADO M6X1 D985 8ZN	NUT	ECROU	SELBSTSICHERNDE MUTTER M6-5S	
16	B0C004999	CHIUSURA SUPERIORE SX	LEFT UPPER LOCK	FERMETURE SUPERIEURE GAUCHE	LINKER OBERER VERSCHLUSS	
17	B07V00070	CUNEO D ARRESTO TIPO UK20K	WHEEL CHOCK	COIN D ARRET UK20K	UNTERLEGEKEIL	
18	B07V00071	SOSTEGNO CUNEO TIPO HA20K	CHOCK SUPPORT TYPE HA20K	SUPPORT COIN HA20K	KEILHALTERUNG HA20K	
19	B01000011	RIVETTO STR. 6X12 U9200A AL	RIVET 6X12 U9200A AL	RIVET	ABREISSNIETEN 6X15	
20	B0E000025	CATADIOTRO TRIANGOLARE ROSSO	RED TRIANGULAR RETROREFLECTOR	CATADIOPTRE TRIANGULAIRE ROUGE	DREIECKIGER ROTER RUECKSTRAHLE	
21	B00920106	DADO M6X1 D985 8ZN	NUT	ECROU	SELBSTSICHERNDE MUTTER M6-5S	
22	B00180625	VITE M6X1X 25 U5739 8.8ZN	SCREW	VIS	SCHRAUBE	
23	F01410037	ROS.M6 6,4X12,5X1,6 U6592 ZN	WASHER	RONDELLE	BEILAGSCHEIBE 6	
24	B00920106	DADO M6X1 D985 8ZN	NUT	ECROU	SELBSTSICHERNDE MUTTER M6-5S	
25	B07S01635	ATTACCO FANALE SX	LEFT LIGHT ATTACHMENT	ATTELAGE FANAL GAUCHE	LINKER LICHTANSCHLUSS	
26	B0C005037	PORTA TARGA	PLATE HOLDER	PORTE-PLAQUE	SCHILDTRAEGER	
27	B00180620	VITE M6X1X20 U5739 8.8ZN	SCREW	VIS	SCHRAUBE	
28	F01410037	ROS.M6 6,4X12,5X1,6 U6592 ZN	WASHER	RONDELLE	BEILAGSCHEIBE 6	
29	B00920106	DADO M6X1 D985 8ZN	NUT	ECROU	SELBSTSICHERNDE MUTTER M6-5S	
30	B0E000138	LUCE TARGA POST. EXTREME	EXTREME REAR PLATE LIGHT	LUMI RE PLAQUE EN ARRIERE	PLATTE BELEUCHTUNG EXTREME	
31	B00920005	DADO AUTOB.BASSO M 5-5S DIN985	NUT	ECROU	SELBSTSICHERNDE MUTTER M5-5S	
32	B0C005019	CHIUSURA SUPERIORE DX	RIGHT UPPER LOCK	FERMETURE SUPERIEURE DROITE	RECHTER OBERER VERSCHLUSS	
33	B07S01634	ATTACCO FANALE DX	RIGHT LIGHT ATTACHMENT	ATTELAGE FANAL DROIT	RECHTER LICHTANSCHLUSS	
34	B00180620	VITE M6X1X20 U5739 8.8ZN	SCREW	VIS	SCHRAUBE	
35	F01410037	ROS.M6 6,4X12,5X1,6 U6592 ZN	WASHER	RONDELLE	BEILAGSCHEIBE 6	
36	B00920106	DADO M6X1 D985 8ZN	NUT	ECROU	SELBSTSICHERNDE MUTTER M6-5S	
37	B00920005	DADO AUTOB.BASSO M 5-5S DIN985	NUT	ECROU	SELBSTSICHERNDE MUTTER M5-5S	

TAV_290

B0ZKPP0001 = B0ZK1P0001 + B0ZK1P0002

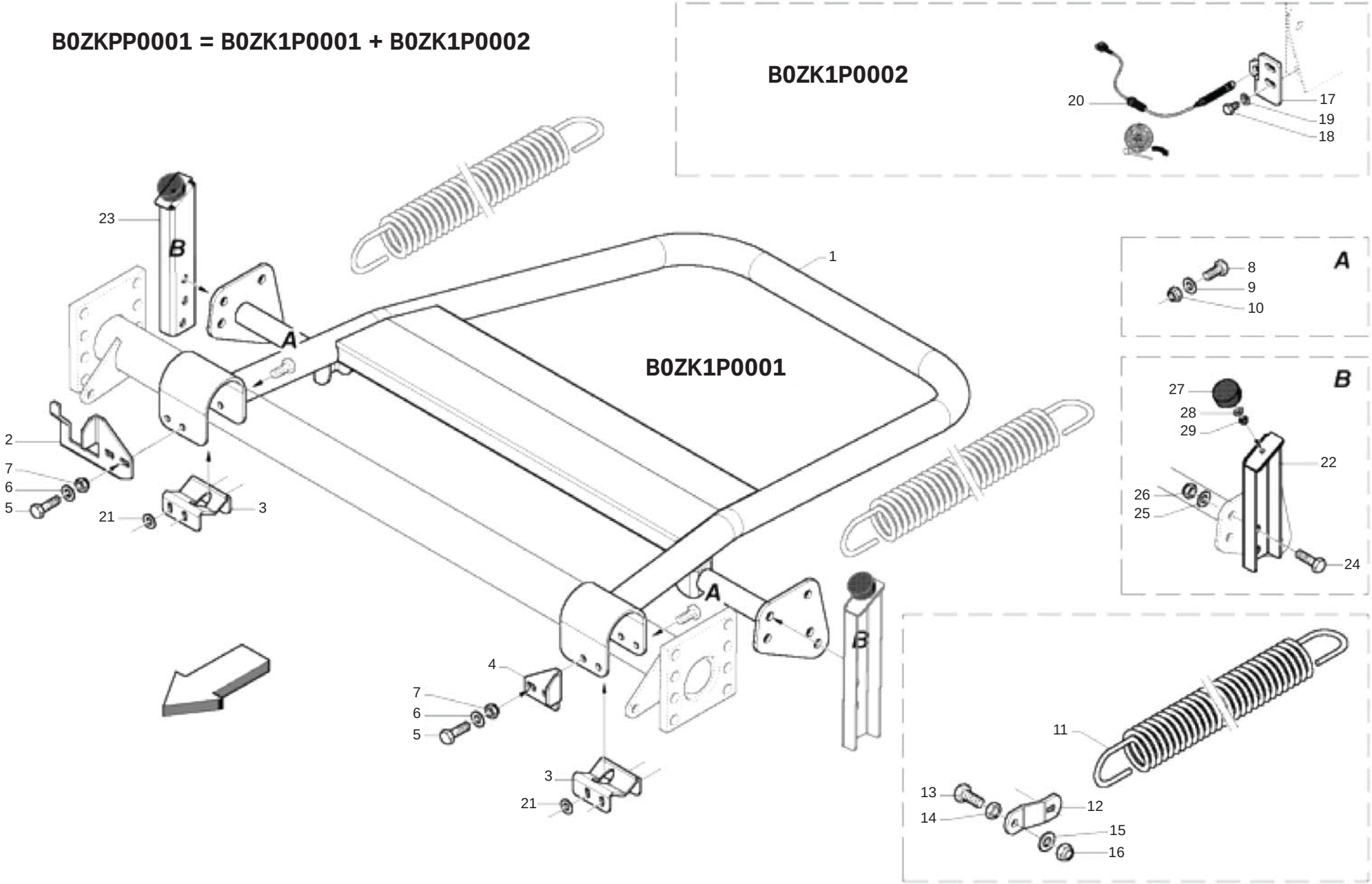

ESPULSORE
EJECTOR

TAV_290

Pos.	Cod.	Descrizione	Description	Description	Benennung	Descripcion
1	B07S01806	ESPULSORE	EJECTOR	EJECTEUR	BALLENAUSWERFER	
2	B0C6P0005	CONTROSENSORE	COUNTER SENSOR	CONTRE-CAPTEUR	GEGENSENSOR	
3	B0C6P0226	CAVALLOTTO	U BOLT	BOULON	U-BUEGEL	
4	B0C6P0006	REGOLATORE	REGULATOR	REGULATEUR	EINSTELLER	
5	F01020516	VITE M12X1,75X45 U5739 8.8ZN	SCR. M12X1,75X45 U5739 8.8ZN	VIS M12X1,75X45 U5739 8.8 ZN	SCHARAUBE M12X1,75X45 U5739 ZN	TORNIL.M12X1,75X45 U5739 8.8ZN
6	F01410076	ROS.M12 13X 20X2,0 U1749 ZN	WASHER	RONDELLE	SCHEIBE	
7	B00920412	DADO M12X1,75 D985 8 ZN	NUT	ECROU	SELBSTSICHERNDE MUTTER M12-5S	
8	F01020514	VITE M12X1,75X40 U5739 8.8ZN	SCR. M12X1,75X40 U5739 8.8ZN	VIS M12X1,75X40 U5739 8.8ZN	SCHRA. M12X1,75X40 U5739 8.8ZN	TORN. M12X1,75X40 U5739 8,8ZN
9	F01410076	ROS.M12 13X 20X2,0 U1749 ZN	WASHER	RONDELLE	SCHEIBE	
10	B00920412	DADO M12X1,75 D985 8 ZN	NUT	ECROU	SELBSTSICHERNDE MUTTER M12-5S	
11	B01800090	MOLLA TRAZ. 8 M=35 L=596	SPRING	RESSORT	FEDER	
12	B0C6P0374	ATTACCO MOLLA	SPRING ATTACHEMENT	ATTELAGE RESSORT	FEDERASCHLUSS	
13	F01020571	VITE M16X2X50 U5739 8.8ZN	SCR. M16X2X50 U5739 8.8ZN	VIS M16X2X50 U5739 8.8 ZN	SCHRAUBE M16 X2X50 U5739 8.8ZN	TORNIL.M16 X2X50 U5739 8.8 ZN
14	B00710516	DADO M16X 2 U5588 6.8 ZN	NUT M16X2 U5588 6.8 ZN	ECROU	MUTTER M16-6S	
15	F01410100	ROS.M16 17X 30X 3 U6592 ZN	WASHER	RONDELLE	SCHEIBE	
16	B00920516	DADO M16X 1,5 D985 6S ZN	NUT M16X1,5 D985 6S ZN	ECROU	SELBSTSICHERNDE MUTTER M16-5S	
17	B0C6P0004	ATTACCO SENSORE ESPULSORE	EJECTOR SENSOR COUPLING	ATTELAGE CAPTEUR EJECTEUR	ANSCHLUSS AUSFERWERSENSOR	
18	F01020436	VITE M8X1,25X20 U5739 8.8ZN	SCR. M8X1,25X20 U5739 8.8ZN	VIS M8X1,25X 20 U5739 8.8 ZN	SCHRAUBE M8X1,25X20U5739 8.8ZN	TORN. M8X1,25X20 U5739 8.8 ZN
19	F01410051	ROS.M8 8,4X 17X1,6 U6592 ZN	WASHER M8 8,4X17X1,6 U6592 ZN	RONDELLE	SCHEIBE	
20	B0E0P0128	SENSORE ESPULSORE	EJECTING SENSOR F_BUS	CAPTEUR JECTEUR F_BUS	SENSOR AUSWERFER LT	
21	F01420120	ROS.M12 13X 36X2,5 U6593 ZN	WASHER	RONDELLE	SCHEIBE	
22	B0C4P0185	APPOGGIO SX ESPULSORE	APPOGGIO SX ESPULSORE.			
23	B0C4P0186	APPOGGIO DX ESPULSORE	APPOGGIO DX ESPULSORE.			
24	F01020564	VITE M16X2X35 U5739 8.8ZN	SCR. M16X2X35 U5739 8.8ZN	VIS M 16X35	SCHRAUBE M 16X35	TORNILLO M 16X35
25	F01410100	ROS.M16 17X 30X 3 U6592 ZN	WASHER	RONDELLE	SCHEIBE	
26	B00920516	DADO M16X 1,5 D985 6S ZN	NUT M16X1,5 D985 6S ZN	ECROU	SELBSTSICHERNDE MUTTER M16-5S	
27	B07049749	TAMPONE 50X21 M10	BUMPER 50X21 M10	TAMPON 50X21 M10	PUFFER 50X21 M10	
28	F01410062	ROS.M10 10,5X 18X 2 U6592 ZN	WASHER M10 10,5X 18X 2 U6592	RONDELLE M10 10,5X18X2 ZN	DICHTUNGSRING M10 10,5X18X2 ZN	RONDANA M10 10,5X18X2 ZN
29	F01230202	DADO M10X1,25 D985 8 ZN	SELF-LOCKING NUT	ECROU NYLSTOP	SELBSTSICHERNDE MUTTER M10-5S	

TAV_295

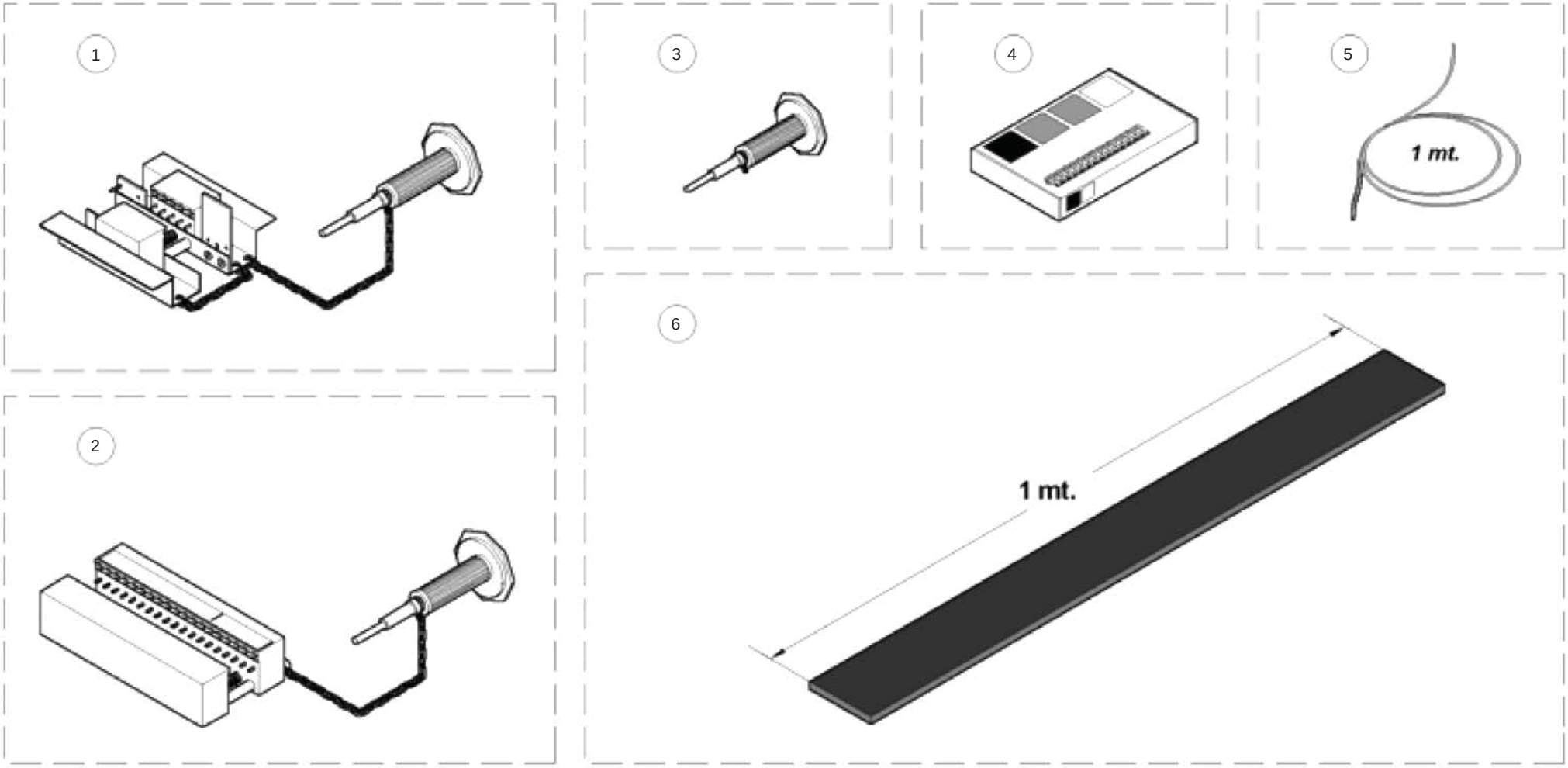

GRAFFATURA
STAPLING DEVICE

TAV_295

Pos.	Cod.	Descrizione	Description	Description	Benennung	Descripcion
1	B0ZAP0025	GRAFFATRICE MATO PROFI 5	GRAFFATRICE MATO PROFI 5 .			
2	B0ZAP0026	GRAFFATRICE MATO PROFI 19	STAPLER MATO PROFI 19 .		STAPLER MATO PROFI 19	
3	B07U00049	SEPAR.PUNCH H X VICE LACERS	PUNCH	POINCON	PUNZEN	
4	B09940018	SCAT. GRAFFE MATO U24BS-12 13	MATO LACINGS BOX	BOITE AGRAFFES MATO	SCHACHTEL MIT KLAMMERN MATO	
5	B09962005	CAVETTO GIUNZIONE MT.1	WIRE 2,5 PLAST.L.1MT	CABLE	KABEL 49 SCHNUREN	
6	B07600073	SPEZZONE CINGHIA MT 01	BELT PIECE L=1000	PIECE DE COURROIE	GURT TEILSTUCK L=1000	

TAV_300

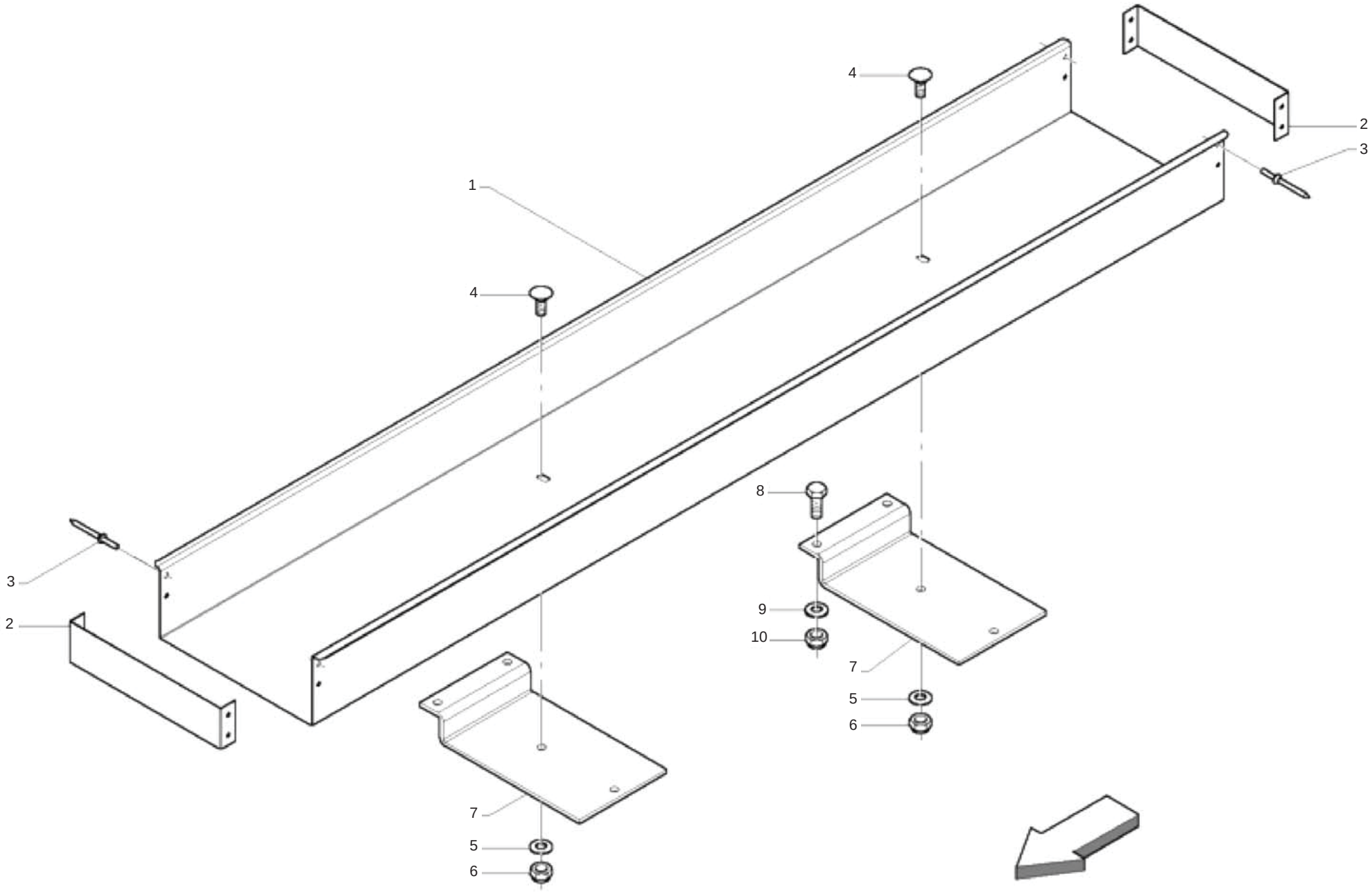

MASCHIO

cod. B0D5P0108

KIT CASSONETTO SUPPLEMENTARE PER BOBINE FILO
ADDITIONAL TWINE BOX KIT

TAV_300

Pos.	Cod.	Descrizione	Description	Description	Benennung	Descripcion
1	B0C005015	CORPO CASSONE SUPP. 265-280	ADDITIONAL BOX	CORPS BOITE SUPPLEMENTAIRE	ZUSATZKASTEN	
2	B0C005014	FERMO TERMINALE	TERMINAL LOCK	ARRET	ENDANSCHLAG	
3	B01000010	RIVETTO STR. 6X12 U9200A AL	RIVET	RIVET	ABREISSNIETEN 6X10	
4	B00321020	VITE M10X1,5 X 30 U5731 4.6ZN	SCREW	VIS	SCHRAUBE VERZINKT TTQST M10X20	
5	F01410062	ROS.M10 10,5X 18X 2 U6592 ZN	WASHER M10 10,5X 18X 2 U6592	RONDELLE M10 10,5X18X2 ZN	DICHTUNGSRING M10 10,5X18X2 ZN	RONDANA M10 10,5X18X2 ZN
6	F01230202	DADO M10X1,25 D985 8 ZN	SELF-LOCKING NUT	ECROU NYLSTOP	SELBSTSICHERNDE MUTTER M10-5S	
7	B0C004685	SOSTEGNO CASSONE SPAGO	TWINE BOX HOLDER	SUPPORT RESERVOIR FICELLE	SCHNURKASTENHALTERUNG	
8	B00181030	VITE M10X1,5 X 30 U5739 8.8ZN	SCREW	VIS	SCHRAUBE	
9	F01410062	ROS.M10 10,5X 18X 2 U6592 ZN	WASHER M10 10,5X 18X 2 U6592	RONDELLE M10 10,5X18X2 ZN	DICHTUNGSRING M10 10,5X18X2 ZN	RONDANA M10 10,5X18X2 ZN
10	F01230202	DADO M10X1,25 D985 8 ZN	SELF-LOCKING NUT	ECROU NYLSTOP	SELBSTSICHERNDE MUTTER M10-5S	

TAV_305

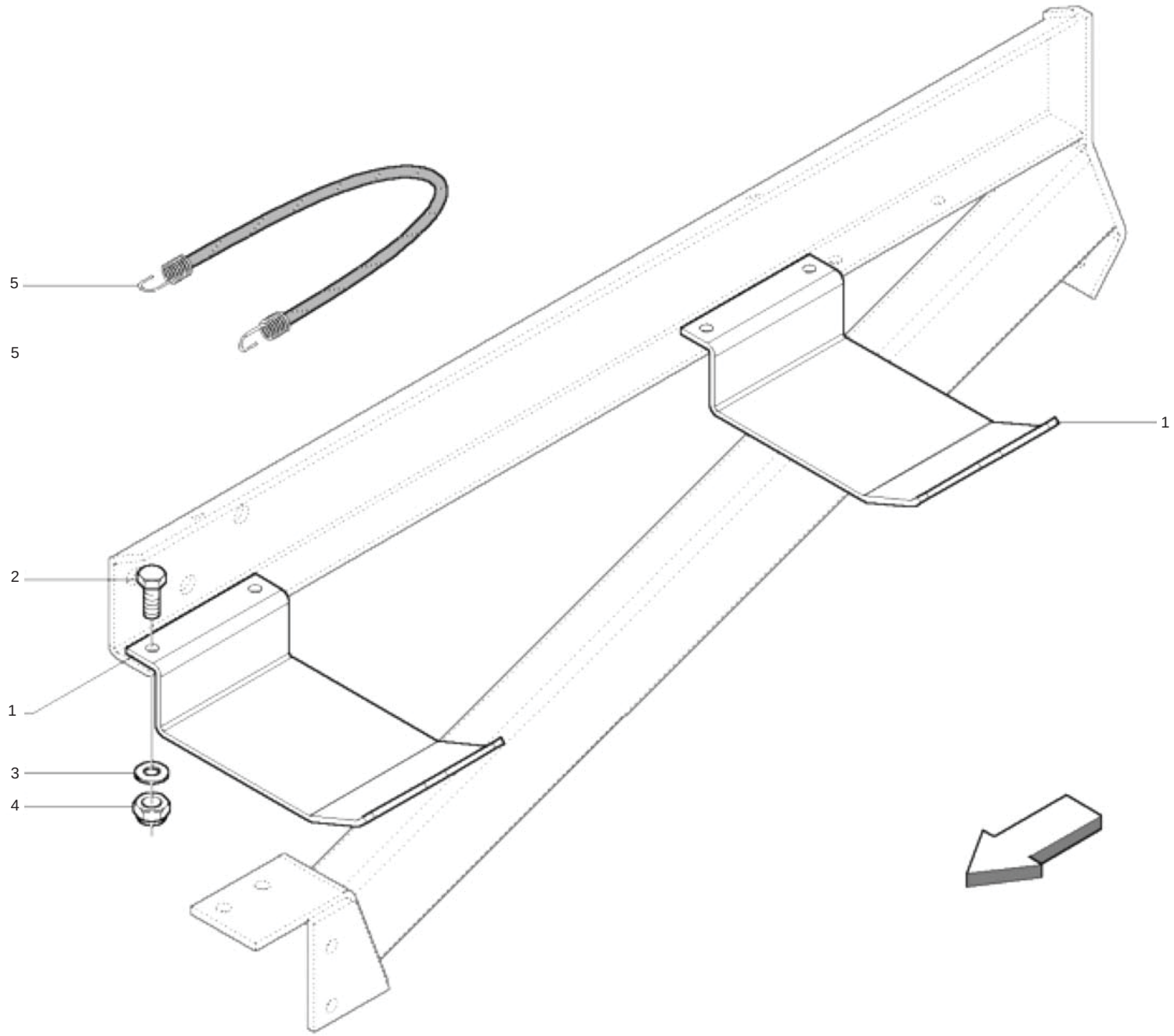

KIT STAFFE SUPPLEMENTARI PER ROTOLO RETE
ADDITIONAL NET SUPPORT KIT

TAV_305

Pos.	Cod.	Descrizione	Description	Description	Benennung	Descripcion
1	B0C100013	SOSTEGNO RETE	NET SUPPORT	SUPPORT FILET	NETZHALTER	
2	B00181030	VITE M10X1,5 X 30 U5739 8.8ZN	SCREW	VIS	SCHRAUBE	
3	F01410062	ROS.M10 10,5X 18X 2 U6592 ZN	WASHER M10 10,5X 18X 2 U6592	RONDELLE M10 10,5X18X2 ZN	DICHTUNGSRING M10 10,5X18X2 ZN	RONDANA M10 10,5X18X2 ZN
4	F01230202	DADO M10X1,25 D985 8 ZN	SELF-LOCKING NUT	ECROU NYLSTOP	SELBSTSICHERNDE MUTTER M10-5S	
5	B07V00107	FUNE ELASTICA CON GANCI	ELASTIC CABLE WITH HOOKS	CABLE ELASTIQUE AVEC CROCHETS	ELASTISCHES SEIL MIT HAKEN	

TAV_310

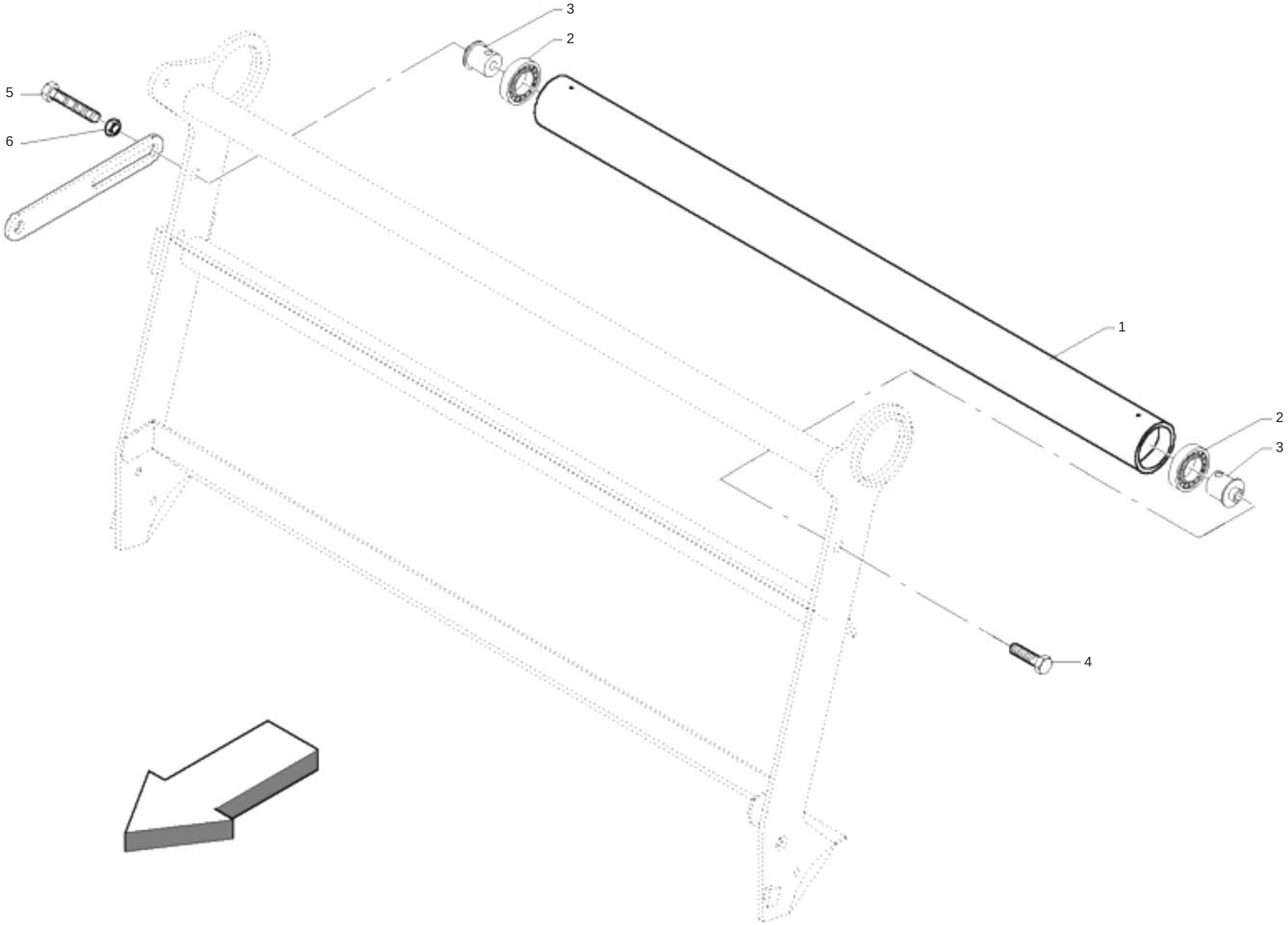

KIT FILM PLASTICO
PLASTIC FILM KIT

TAV_310

Pos.	Cod.	Descrizione	Description	Description	Benennung	Descripcion
1	B03500048	RULLO FOLLE	IDLE ROLLER	ROULEAU FOU	UMLENKWALZE	
2	B02040002	CUSCINETTO 6307-2RS CAT.KST004	BEARING	ROULEMENT	LAGER 6307-2RS	
3	B03500047	PERNO RULLO FOLLE	IDLE ROLLER GUDGEON	TOURILLON ROULEAU FOU	STIFT UMLENKWALZE	
4	F01020512	VITE M12X1,75X35 U5739 8.8ZN	SCR. M12X1,75X35 U5739 8.8ZN	VIS M12X1,75X35 5739 8.8 ZN	SCHR. M12X1,75X35 5739 8.8 ZN	TORN. M12X1,75X35 5739 8.8 ZN
5	F01020524	VITE M12X1,75X90 U5739 8.8ZN	SCR. M12X1,75X90 U5739 8.8ZN			
6	F01200293	DADO M12X1,75 U5588 CL8 ZN	NUT M12X1,75 U5588 6S ZN	ECROU M12X1,75 U5588 6S ZN	MUTTER M12X1,75 U5588 6S ZN	TUERCA M12X1,75 U5588 6S ZN

TAV_315

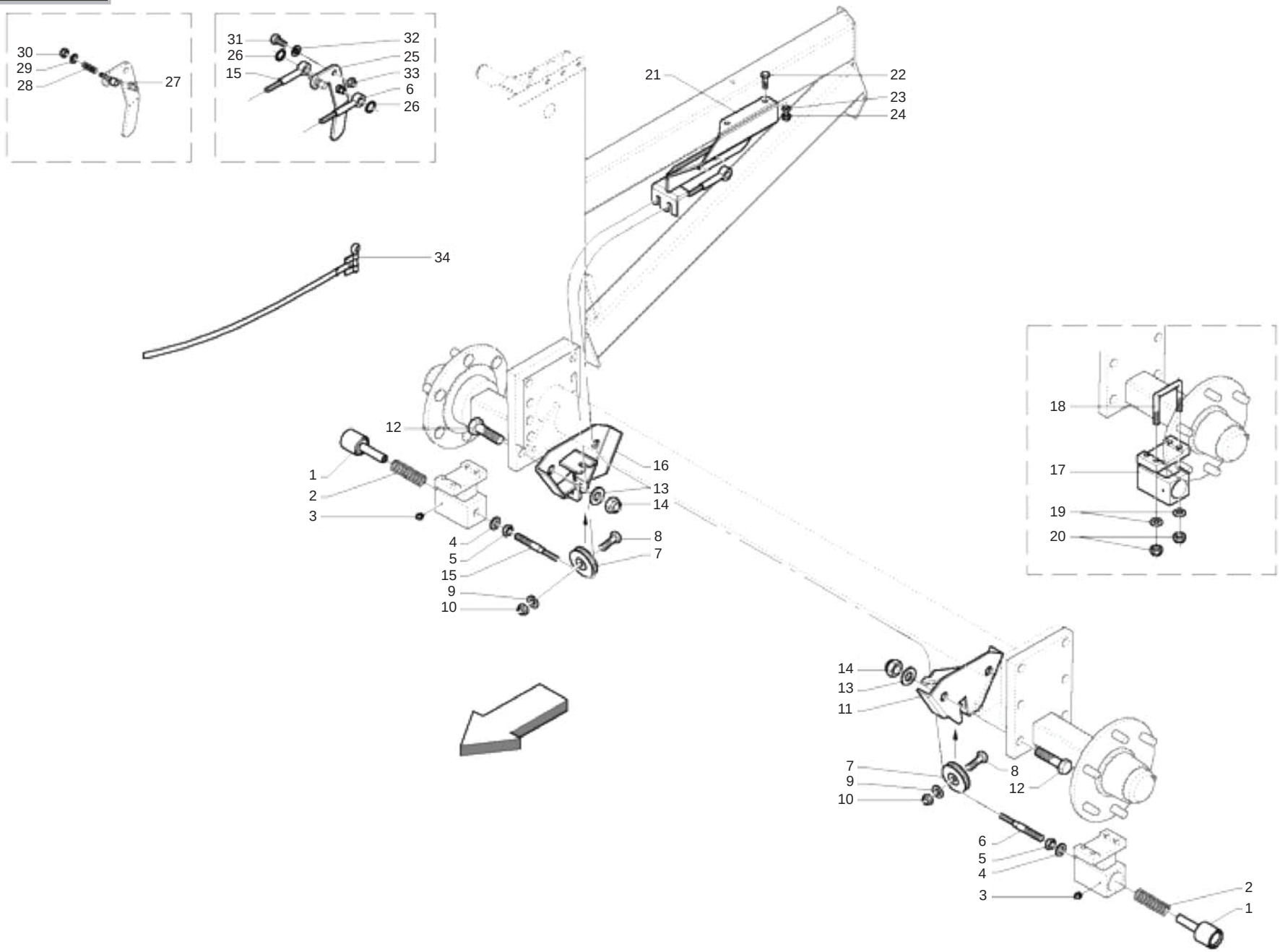

MASCHIO

cod. B0D5P0108

DISPOSITIVO DI STAZIONAMENTO MECCANICO
MECHANICAL PARKING DEVICE

TAV_315

Pos.	Cod.	Descrizione	Description	Description	Benennung	Descripcion
1	B013P0003	PERNO	PIN	TOURILLON	ZAPFEN	
2	B01830231	MOLLA	SPRING	RESSORT	FEDER	
3	B04200610	INGRASS.A SFERE M6X1 LUNGO	GREASE NIPPLE	GRAISSEUR HYDRAULIQUE	GERADER SCHMIERNIPPEL M6X1	
4	F01420060	ROS.M10 10,5X 30X2,5 U6593 ZN	WASHER	RONDELLE	SCHEIBE	
5	B00710310	DADO M10X1,25 U5588 6S ZN	NUT	ECROU	MUTTER M10-6S	
6	B07J00011	CAVO DI COM. 4	CONTROL CABLE DIAM. 4	CABLE DE COMMANDE DIAM. 4	STEUERUNGSKABEL	
7	B038P0001	CARRUCOLA PER FUNE	PULLEY FOR ROPE	POULIE	LAUFROLLE	
8	F01020114	VITE M10X1,5X50 U5737 8.8ZN	SCR. M10X1,5X50 U5737 8.8ZN	VIS M10X 1,5X50 U5737 8.8 ZN	SCHRA.M10X 1,5X50 U5737 8.8 ZN	TORN. M10X 1,5X50 U5737 8.8 ZN
9	F01410062	ROS.M10 10,5X 18X 2 U6592 ZN	WASHER M10 10,5X 18X 2 U6592	RONDELLE M10 10,5X18X2 ZN	DICHTUNGSRING M10 10,5X18X2 ZN	RONDANA M10 10,5X18X2 ZN
10	F01230202	DADO M10X1,25 D985 8 ZN	SELF-LOCKING NUT	ECROU NYLSTOP	SELBSTSICHERNDE MUTTER M10-5S	
11	B07SP0006	ATTACCO CARRUCOLA SX	LEFT PULLEY ATTACHMENT	ATTELAGE POULIE GAUCHE	ANSCHLUSS LAUFROLLE LINKS	
12	F01020986	VITE M20X2,5X60 U5737 8.8 ZN	SCREW M20X2,5X60 U5737 8.8 ZN	HELI. M20X2,5X60 U5737 8.8 ZN	SCHRA. M20X2,5X60 U5737 8.8 ZN	TORN. M20X2,5X60 U5737 8.8 ZN
13	F01410124	ROS.M20 21X 37X 3 U6592 ZN	WASHER M20 21X 37X 3 U6592 ZN	RONDEL.M20 21X 37X 3 U6592 ZN	MUTTER M20 21X 37X 3 U6592 ZN	ARANDELA M20 21X37X3 U6592 ZN
14	F01230259	DADO AUTOB.BASSO M20 8 D985 ZN	NUT	ECROU	SELBSTSICHERNDE MUTTER M20-5S	
15	B07J00010	CAVO D1 COM. 4	CONTROL CABLE DIAM. 4	CABLE DE COMMANDE DIAM.4	STEUERUNGSKABEL	
16	B07SP0005	ATTACCO CARRUCOLA DX	RIGHT PULLEY ATTACHMENT	ATTELAGE POULIE DROIT	ANSCHLUSS LAUFROLLE RECHTS	
17	B07SP0004	SOSTEGNO CORSOIO	SLIDER SUPPORT	SUPPORT COULISSE	HALTER	
18	B00500081	CAVALLOTTO 60X60 M12 ZINCATO	U-BOLT 60X60 M12	BOULON 60X60 M12	BUEGELBOLZEN 60X60 M12	
19	F01410076	ROS.M12 13X 20X2,0 U1749 ZN	WASHER	RONDELLE	SCHEIBE	
20	B00920412	DADO M12X1,75 D985 8 ZN	NUT	ECROU	SELBSTSICHERNDE MUTTER M12-5S	
21	B07SP0008	ATTACCO MANIGLIA	HANDLE ATTACHMENT			
22	B00191040	VITE M10X1,5 X 40 U5737 8.8ZN	SCREW	VIS	SCHRAUBE	
23	F01410062	ROS.M10 10,5X 18X 2 U6592 ZN	WASHER M10 10,5X 18X 2 U6592	RONDELLE M10 10,5X18X2 ZN	DICHTUNGSRING M10 10,5X18X2 ZN	RONDANA M10 10,5X18X2 ZN
24	F01230202	DADO M10X1,25 D985 8 ZN	SELF-LOCKING NUT	ECROU NYLSTOP	SELBSTSICHERNDE MUTTER M10-5S	
25	B07SP0007	MANIGLIA CON SPINA	HANDLE WITH PIN			
26	F02050651	ANELLO E. DE 10X 1 U7435 C70	SEEGER RING ARR.10 U7435-75	SEEGER ARR. 10 UNI 7435-75	SEEGERING ARR.10 UNI 7435-75	ANILLO ARR.10 UNI 7435-75
27	B005P0001	SPINA DI SICUREZZA	SAFETY PIN	EPINE DE SURETE	SICHERHEITSSTIFT	
28	B01821993	MOLLA	SPRING	RESSORT	FEDER	
29	F01420048	ROS.M8 8,4X 24X 2 U6593 ZN	WASHER	RONDELLE	SCHEIBE	
30	B00920208	DADO M8X1 D985 8ZN	NUT M8X1 D985 8ZN	ECROU	SELBSTSICHERNDE MUTTER M8-5S	
31	F01020152	VITE M12X1,75X40 U5737 8.8ZN	SCR. M12X1,75X40 U5737 8.8ZN	VIS M12X1,75X40 U5737 8.8 ZN	SCHRAUBE M12X1,75X40U57378.8ZN	TORNIL.M12X1,75X40 U5737 8.8ZN
32	F01410076	ROS.M12 13X 20X2,0 U1749 ZN	WASHER	RONDELLE	SCHEIBE	
33	B00920412	DADO M12X1,75 D985 8 ZN	NUT	ECROU	SELBSTSICHERNDE MUTTER M12-5S	
34	B0E000061	FASCETTA A COPPIGLIA	STEEL HOSE CLAMP			

TAV_320

SOLO ITALIA
ONLY ITALY

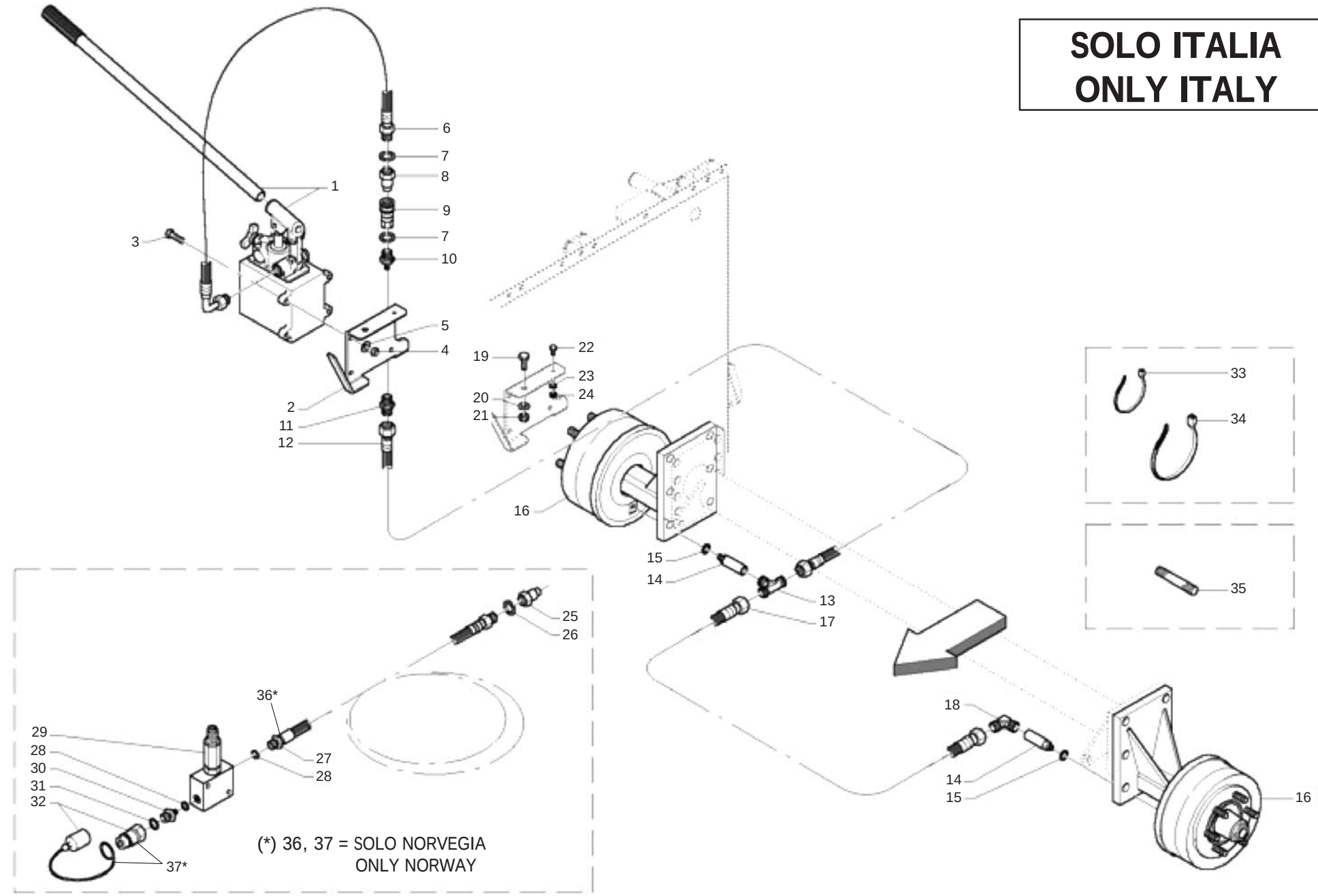

MASCHIO

cod. B0D5P0108

DISPOSITIVO DI STAZIONAMENTO IDRAULICO (CUT)
HYDRAULIC PARKING DEVICE (CUT)

TAV_320

Pos.	Cod.	Descrizione	Description	Description	Benennung	Descripcion
1	B0H400107	POM.MANO HPT 12 CAPACITA SERBA	HAND PUMP HPT12C	POMPE A MAIN HPT	HANDPUMPE HPT12C	
2	B0C4P0002	SOSTEGNO POMPA A MANO	MANUAL PUMP SUPPORT	SUPPORT POMPE A MAIN	EISENWINKEL	
3	F01020065	VITE M 8X1,25X 30 U5737 8.8ZN	SCREW M 8X1,25X 30 U5737 8.8Z			
4	F01410051	ROS.M8 8,4X 17X1,6 U6592 ZN	WASHER M8 8,4X17X1,6 U6592 ZN	RONDELLE	SCHEIBE	
5	B00920208	DADO M8X1 D985 8ZN	NUT M8X1 D985 8ZN	ECROU	SELBSTSICHERNDE MUTTER M8-5S	
6	B0H000206	TUBO R16 1 4 STRONGER 1 L410	HYDR HOSE WITH FITTING L=410	TUYAU HYDRAULIQUE AVEC RACCORD	HYDRHES ROHR L=410	
7	F01440094	RONDELLA ALLUMINIO D10	WASHER D10 ALUMINIUM	RONDELLE D10 AL	SCHIEBE D10 ALUMIN	ARANDELA D10 AL
8	B0H000207	INNESTO RAPIDO 1 4 MASCHIO	FAST CLUTCH 1 4 MALE	EMBRAYAGE RAPIDE 1 4 MALE	KUPPLUNG 1 4	
9	B0H000208	INNESTO RAPIDO 1 4 FEMMINA	FAST CLUTCH 1 4 FEMALE	EMBRAYAGE RAPIDE 1 4 FEMELLE	KUPPLUNG 1 4	
10	B0H000284	RAC. I 10 TN126GG-10LR	I FITTING TN 126GG-10LR	RACCORD I 10	KUPPLUNG I 10 HARKEN	
11	B0H000153	RACC. I 10 SOLO CORPO RASTELLI	CONNECTION	RACCORD I 10 SEULEMENT CORPS	ANSCHLUSS I 10	
12	B0H000033	TUBO IDRAUL. L=1000	HYDR. TUBE	TUYAU HYDRAULIQUE L=1000	HYDR.SCHLAUCH L=1000	
13	B0H000144	RACCORDO T 10 TN96-10LR	UNION TEE 10	RACCORD T	KUPPLUNG HARKE	
14	B0H000162	MANICOTTO DI RACCORDO	FITTING SLEEVE	MANCHON DE RACCORD	ANSCHLUSS	
15	B01441415	RONDELLA IN RAME 1 4	WASHER	RONDELLE	BEILAGSCHEIBE 1 4 13X19X1,5	
16	B07100031	MOZZO CON FRENO SPRINTER NEW	HUB WITH BRAKE	MOYEU AVEC FREIN NOUVELLE SPR	RADACHSE MIT BREMSE SPRINTER	
17	B0H000091	TUBO FLEX SAE 100 R1AT1 4L2050	FLEXIBLE TUBE SAE 100 R1AT	TUYAU FLEXIBLE SAE 100 R1AT 1	ROEHRE FLEX SAE 100 R1AT 1 4	
18	B0H000086	RACCORDO L 10 TN94-10LR	UNION L 10	RACCORD L 10	ANSCHLUSSSTUECK L 10	
19	F01020472	VITE M10X1,5X25 U5739 8.8ZN	SCR. M10X1,5X25 U5739 8.8ZN	VIS M10X1,5X25 U5739 8.8 ZN	SCHRAUBE M10X1,5X25 U5739 8.8	TORNILLO 10X25 U5739 8.8 ZN
20	F01410062	ROS.M10 10,5X 18X 2 U6592 ZN	WASHER M10 10,5X 18X 2 U6592	RONDELLE M10 10,5X18X2 ZN	DICHTUNGSRING M10 10,5X18X2 ZN	RONDANA M10 10,5X18X2 ZN
21	F01230202	DADO M10X1,25 D985 8 ZN	SELF-LOCKING NUT	ECROU NYLSTOP	SELBSTSICHERNDE MUTTER M10-5S	
22	B00180625	VITE M6X1X 25 U5739 8.8ZN	SCREW	VIS	SCHRAUBE	
23	F01410037	ROS.M6 6,4X12,5X1,6 U6592 ZN	WASHER	RONDELLE	BEILAGSCHEIBE 6	
24	B00920106	DADO M6X1 D985 8ZN	NUT	ECROU	SELBSTSICHERNDE MUTTER M6-5S	
25	B0H000207	INNESTO RAPIDO 1 4 MASCHIO	FAST CLUTCH 1 4 MALE	EMBRAYAGE RAPIDE 1 4 MALE	KUPPLUNG 1 4	
26	F01440094	RONDELLA ALLUMINIO D10	WASHER D10 ALUMINIUM	RONDELLE D10 AL	SCHIEBE D10 ALUMIN	ARANDELA D10 AL
27	B0H0P0001	TUBO IDRAUL. L=5500	HYDRAULIC HOSE L=5500	TUYAU HYDRAULIQUE L=5500	HYDRAULISCHES ROHR L=5500	
28	B01441815	ROS. 17 X23X1,5 RAME -3 8	WASHER	RONDELLE	SCHEIBE	
29	B0H000143	VALV. DI RID. VRPRL2B38TS.SR	REDUCTION VALVE	VALVE DE REDUCTION VRPRL2B38TS	VENTIL	
30	B0H6000AB	NIPPLO RIDUZ.1 2 -3 8 RASTEL	NIPPLE	NIPPLE REDUCTION 1 2 - 3 8		
31	B01442015	ROS. 21 X27X1,5 RAME -1 2	WASHER	RONDELLE	BEILAGSCHEIBE 1 2	
32	B0H6000A0	INNESTO RAP.NV 12GAS-M	QUICK CLUTCH	EMBRAYAGE	SCHNELLKUPPLUNG	
33	F05150055	FASCETTA LUMEFIX 3,6X180	CLAMP LUMEFIX	BANDE LUMEFIX	MANSCHETTE LUMEFIX	
34	B0E600022	FASCETTA LUMEFIX 4,8X340	CLAMP LUMEFIX 4,8X340			
35	B005P0005	PRIGIONIERO M20 108	STUD BOLT	PRISONNIER	STIFTSCHRAUBE	
36	B0H000097	TUBO R1T 1 4 L. 5500	FLEXIBLE TUBE SAE 100 R1AT	TUYAU FLEXIBLE SAE 100 R1AT 1	ROEHRE FLEX SAE 100 R1AT 1 4	
37	B0H000223	INNESTO RAP FEM VF0 12 GAS	INNESTO RAP FEM VF0 12 GAS .	EMBRAYAGE RAPIDE FEMELLE		

TAV_325

(*) 18 = SOLO NORVEGIA
ONLY NORWAY

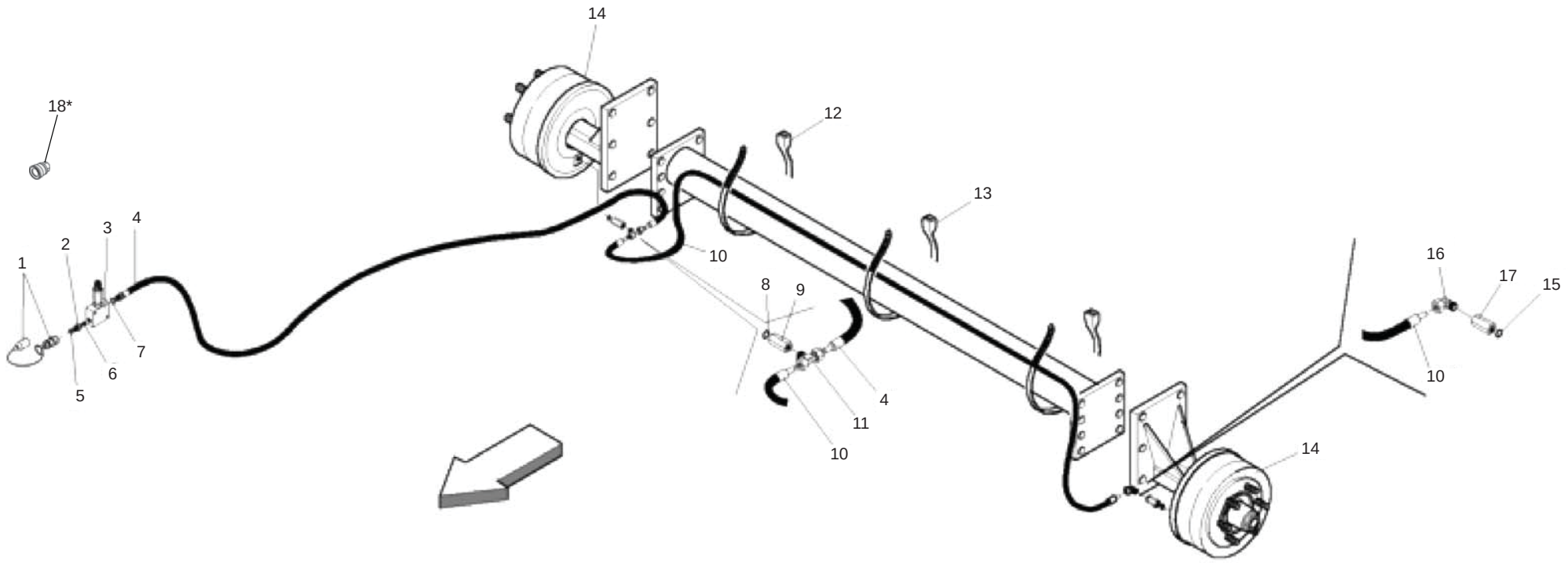

FRENO IDRAULICO (NO OMOLOGAZIONE ITALIA)
HYDRAULIC BRAKE (NO ITALY APPROVAL)

TAV_325

Pos.	Cod.	Descrizione	Description	Description	Benennung	Descripcion
1	B0H6000A0	INNESTO RAP.NV 12GAS-M	QUICK CLUTCH	EMBRAYAGE	SCHNELLKUPPLUNG	
2	B0H6000AB	NIPPLO RIDUZ.1 2 -3 8 RASTEL	NIPPLE	NIPPLE REDUCTION 1 2 - 3 8		
3	B0H000143	VALV. DI RID. VRPRL2B38TS.SR	REDUCTION VALVE	VALVE DE REDUCTION VRPRL2B38TS	VENTIL	
4	B0H000097	TUBO R1T 1 4 L. 5500	FLEXIBLE TUBE SAE 100 R1AT	TUYAU FLEXIBLE SAE 100 R1AT 1	ROEHRE FLEX SAE 100 R1AT 1 4	
5	B01442015	ROS. 21 X27X1,5 RAME -1 2	WASHER	RONDELLE	BEILAGSCHEIBE 1 2	
6	B01441815	ROS. 17 X23X1,5 RAME -3 8	WASHER	RONDELLE	SCHEIBE	
7	B01441815	ROS. 17 X23X1,5 RAME -3 8	WASHER	RONDELLE	SCHEIBE	
8	B01441415	RONDELLA IN RAME 1 4	WASHER	RONDELLE	BEILAGSCHEIBE 1 4 13X19X1,5	
9	B0H000162	MANICOTTO DI RACCORDO	FITTING SLEEVE	MANCHON DE RACCORD	ANSCHLUSS	
10	B0H000091	TUBO FLEX SAE 100 R1AT1 4L2050	FLEXIBLE TUBE SAE 100 R1AT	TUYAU FLEXIBLE SAE 100 R1AT 1	ROEHRE FLEX SAE 100 R1AT 1 4	
11	B0H000098	RACCORDO T 10 TN 127-10LR	UNION T 10	RACCORD T 10	T.VERSCHRAUBUNG	
12	F05150055	FASCETTA LUMEFIX 3,6X180	CLAMP LUMEFIX	BANDE LUMEFIX	MANSCHETTE LUMEFIX	
13	B0E600022	FASCETTA LUMEFIX 4,8X340	CLAMP LUMEFIX 4,8X340			
14	B07100031	MOZZO CON FRENO SPRINTER NEW	HUB WITH BRAKE	MOYEU AVEC FREIN NOUVELLE SPR	RADACHSE MIT BREMSE SPRINTER	
15	B01441415	RONDELLA IN RAME 1 4	WASHER	RONDELLE	BEILAGSCHEIBE 1 4 13X19X1,5	
16	B0H000086	RACCORDO L 10 TN94-10LR	UNION L 10	RACCORD L 10	ANSCHLUSSSTUECK L 10	
17	B0H000162	MANICOTTO DI RACCORDO	FITTING SLEEVE	MANCHON DE RACCORD	ANSCHLUSS	
18	B0H000223	INNESTO RAP FEM VF0 12 GAS	INNESTO RAP FEM VF0 12 GAS .	EMBRAYAGE RAPIDE FEMELLE		

TAV_328

1 Extreme

2 265

3 LT

4 LTC

5

6 FERABOLI

7 FERABOLI

DECAL "LOGO"
DECAL "LOGO"

TAV_328

Pos.	Cod.	Descrizione	Description	Description	Benennung	Descripcion
1	B07500732	ET EXTREME FRONTALE	DECAL EXTREME	DECAL EXTREME FRONTAL	AUFKLEBER EXTREME VORN	
2	B075P0042	ET 265 PER LT	DECAL 265 LT	DECAL 265 POUR LT	AUFKLEBER 265 FUER LT	
3	B075P0043	ET LT	DECAL LT	DECAL LT	AUFKLEBER LT	
4	B075P0044	ET LTC	DECAL LTC	DECAL LTC	AUFKLEBER LTC	
5	B07500744	ET F - BOTTONE	DECAL F -	DECAL F - BOUTON	AUFKLEBER F - KNOPF	
6	B075P0045	DECAL MARCHIO H=110	DECAL MARCHIO H=110 .			
7	B075P0046	ET MARCHIO H=280	DECAL STENCIL H=280	DECAL MARQUE H=280	AUFKLEBER MARKE H=280	

TAV_329

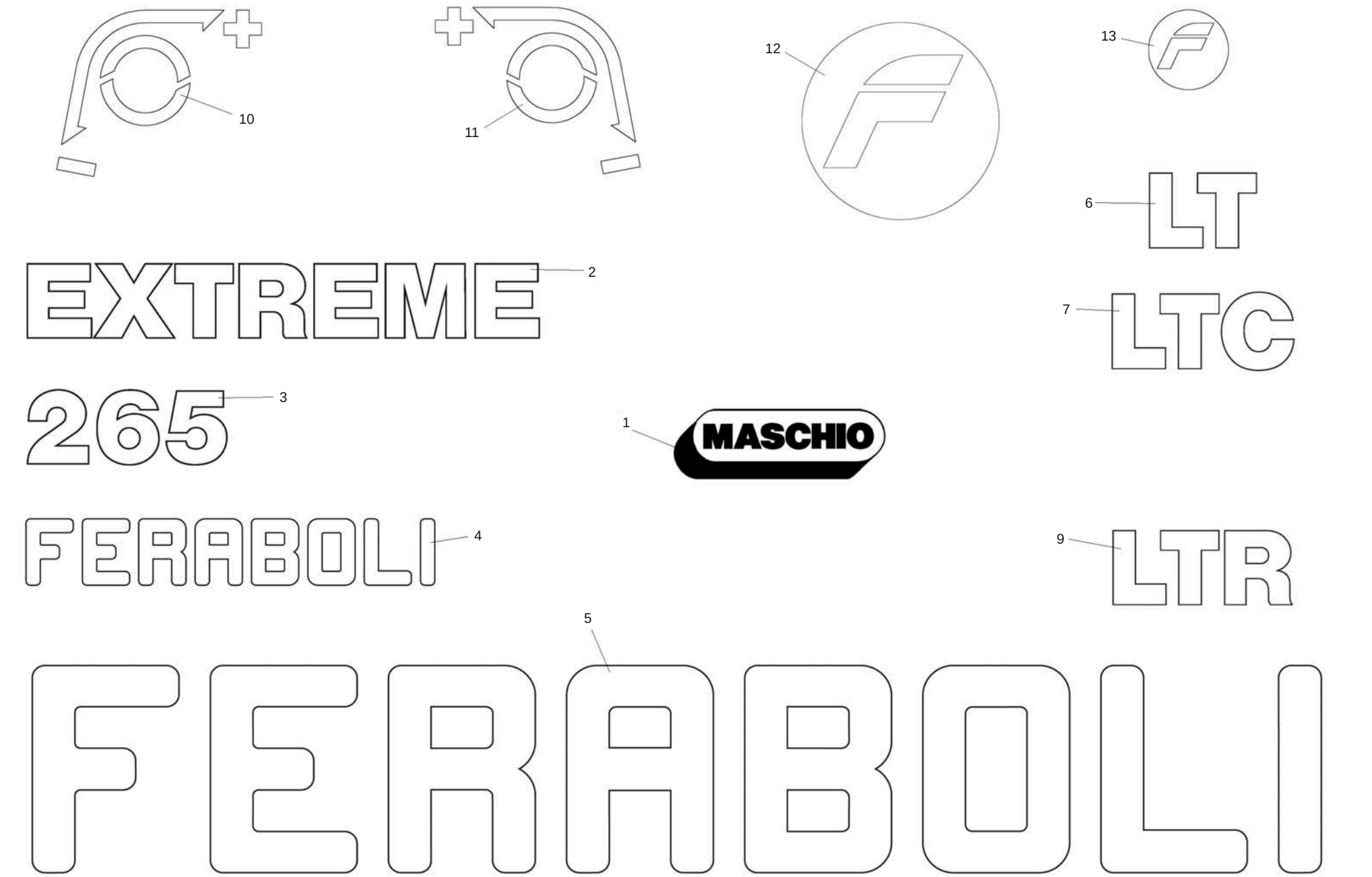
10
11
12
13
6
LT
2
EXTREME
7
LTC
3
265
1
MASCHIO
FERABOLI
4
9
LTR
5
FERABOLI

DECAL "LOGO"
DECAL "LOGO"

TAV_329

Pos.	Cod.	Descrizione	Description	Description	Benennung	Descripcion
1	F20010201	ETICH.IDENT. MASCHIO 160X 53	LABEL MASCHIO 160X 53			
2	B075C0058	DECAL EXTREME	DECAL ARCHIMEDE			
3	B075C0039	DECAL 265	DECAL. 265			
4	B075C0054	DECAL FERABOLI L=298 X 48	DECAL. FERABOLI L=298 X 48			
5	B075C0055	ECAL FERABOLI L=1000 X 160	DECAL FERABOLI L=1000 X 160			
6	B075C0037	DECAL EXTREME LT	DECAL. EXTREME LT			
7	B075C0038	DECAL EXTREME LTC	DECAL. EXTREME LTC			
9	B075C0057	DECAL EXTREME LTR	DECAL. EXTREME LTR			
10	B07500747	ET CARTER PU - LATO SX	DECAL CARTER PU -	DECAL CARTER PU - GAUCHE	AUFKLEBER CARTER PU - LINKS	
11	B07500746	ET CARTER PU - LATO DX	DECAL CARTER PU -	DECAL CARTER PU - DROIT	AUFKLEBER CARTER PU - RECHTS	
12	B07500744	ET F - BOTTONE	DECAL F -	DECAL F - BOUTON	AUFKLEBER F - KNOPF	
13	B07500745	ET F - TAPPO	DECAL F -	DECAL F - BOUCHON	AUFKLEBER F - PROPFEN	

TAV_335

DECAL "CE"
DECAL "CE"

TAV_335

Pos.	Cod.	Descrizione	Description	Description	Benennung	Descripcion
1	B07500185	ET CONSULT IL LIBRETTO OP.	DECAL SEE OPERATOR S MANUAL	DECAL LIRE LE LIVRE OPERATEU	AUFKLEBE BUCH ANSCHLAGEN	
2	B07500186	ET TOGLIERE LA CHIAVE...	DECAL TAKE THE WRENCH AWAY	DECAL CHASSER LA CLEF	AUFKLEBE SCHLUSSEL ZIEHEN	
3	B07500208	ET MANO-OLIO SOTTO PRESSIONE	DECAL OIL UNDER PRESSURE HAND	DECAL MAIN-HUILE SOUS PRESSIO	AUFKLEBE HAND-OEL	
4	B07500187	ET 540 GIRI - RICC SX NORMA	DECAL 540RPM - LEFT BURR	DECAL 540 T H-SENS DE ROTATIO	AUFKLEBE 540 RPM	
5	B07500199	ET PERSONA SCHIACC.-ZONA	DECAL SQUEEZED PERSON	DEECAL PERSONNE ECRASEE -ZONE	AUFKLEBE GEQUETSCHER MANN	
6	B07500203	ET TAGLIO MANO-STOP NORMA CEE	DECAL HAND CUT _ STOP	DECAL COUPE MAINE - STOP	AUFKLEBE HANDSCHNITT - HALT	
7	B07500221	ET PIEDE TAGLI-STARE DISTANTE	WARNING CUT FEET DECAL	DECAL PIED COUPE	AUFKLEBE GESCHNITTER FUSS	
8	B07500207	ET PERSONA INTRAPP. PICK-UP	TRAPPED MAN DECAL	DECAL PERSONNE PIEGEE-PICK-UP	AUFKLEBE GEFANGTENER MANN	
9	B07500198	ET PERSONA SCHIAC-SOTTO PORTE	SQUEEZED MAN DECAL	DECAL PERSONNE ECRASE -SOUS	AUFKLEBE GEQUETSCHER MANN	
10	B07500726	DECAL TAGLIO MANO-LAMA SPAGO	LABEL CUTTING BLADE HAND-TWINE			
11	B07500201	ET SCOSSA ELETTR NORMA CEE	ELECTRIC SHOCK DECAL	DECAL SECOUSSE ELECTRIQUE	AUFKLEBER STROMSTOSS	
12	B07500212	ET PERSONA SCHIACC-BALLA NORM	SQUEEZED MAN-BALE DECAL	DECAL PERSONNE ECRASEE -BALLE	AUFKLEBER GEQUERSCHTER MANN	
13	B07500197	ET PERSONA SCHIACC-PRES MURO	SQUEEZED MAN DECAL	DECAL PERSONNE RCRASE - PRES	AUFKLEBER GEQUETSCHER MANN	
14	B07500781	ET PERICOLO CARDANO	DANGER PTO SHAFT DECAL	DECAL DANGER CARDAN	ABZIEHBILD GEFAHR GELENKWELLE	
15	B07500724	ET PERS SCHIACC.-BLOCC.PORTE	DECAL	DECAL PERSONNE-ECRASEE - BLOC	AUFKLEBER GEDRUCKTE PERSON	
16	B07500210	ET MANO SCHIACC-ORGANI SCH	DECAL SQUEEZED HAND _ ORGANS	DECAL MAIN ECRASEE	AUFKLEBE GEQUERSCHTE HAND	

TAV_339

1

2

3

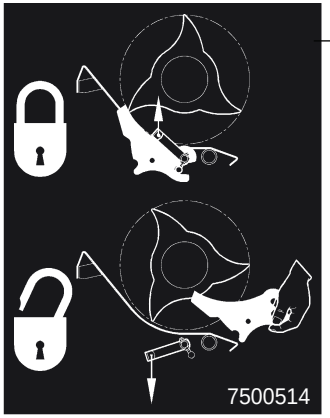

6*

14*

15*

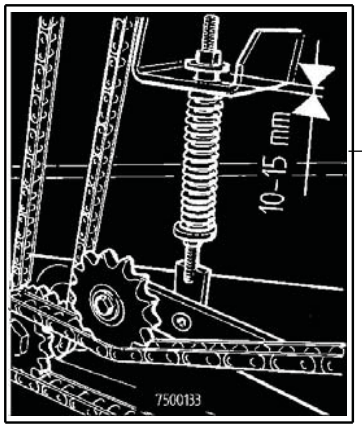

8

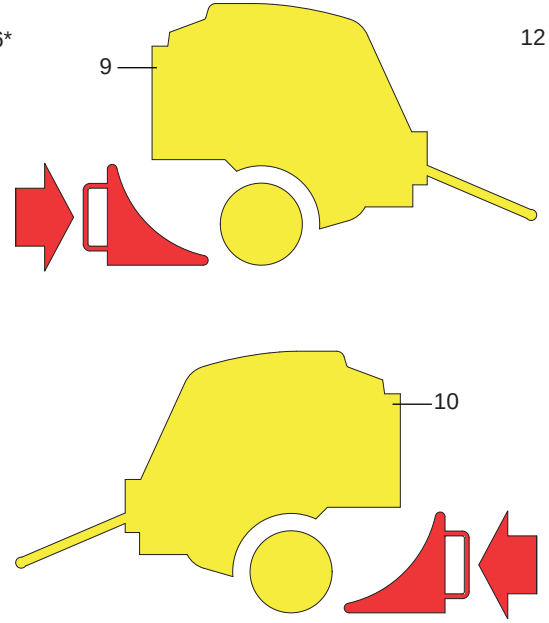
9

10

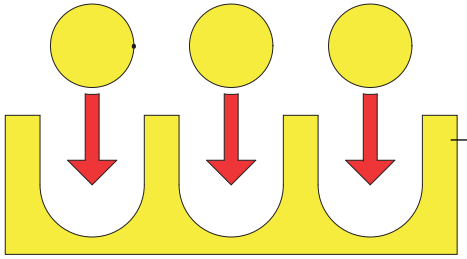
7

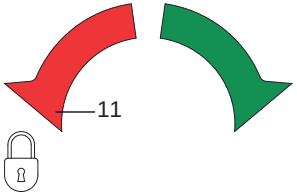
11

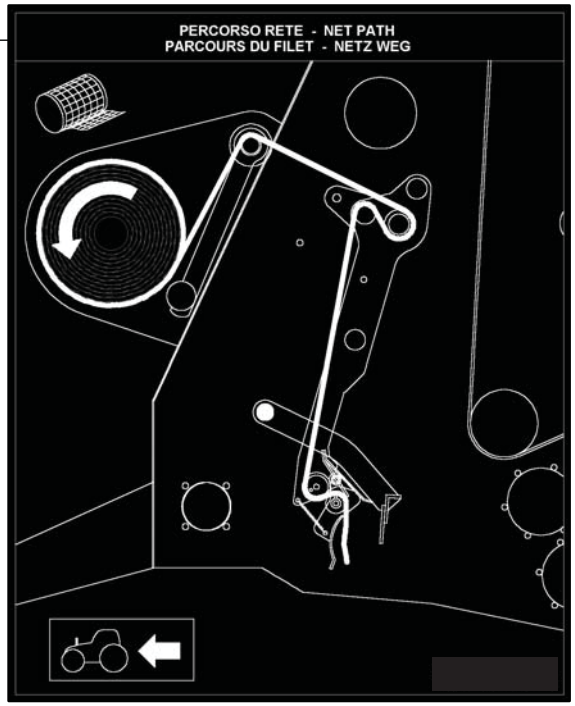

12

(*) 6; 14; 15 = SOLO CUT
ONLY CUT

MASCHIO

cod. B0D5P0108

DECAL "ISTRUZIONE"
DECAL "INSTRUCTION"

TAV_339

Pos.	Cod.	Descrizione	Description	Description	Benennung	Descripcion
1	B07500217	ET NON USARE GETTI..	DECAL DO NOT USE SPOUTS	DECAL NE PAS USER JETS	AUFKLEBE KEINE STRAHL BENUTZE	
2	B07500214	ET POMPETTA GRASSO	DECAL GREASE SQUIRT	DECAL PETITE POMPE GRAISSE	AUFKLEBE OELKAENNCHEN	
3	B07500216	ET GANCIO	DECAL HOOK	DECAL CROC	AUFKLEBE HACKEN	
6	B07500514	ET COLT. BLOCC. SBLOCC.	DECAL KNIVES LOCK. UNBLOCK.	DECAL COUTEAUX BLOC. DEBLOC.	DECAL MESSERN	
7	B07500749	ET AGGANCI IDRAULICI	HYDRAULIC LINKAGE DECAL	DECAL ATTELAGE HYDRAULIQUE	AUFKLEBER HYDR. KUPPLUNG	
8	B07500133	ET TENDITORE AUTOMATICO	DECAL AUTOMATIC TIGHTNER	AUTOCOLLANT TENDEUR AUTOMATI	AUFKLEBER AUTOMATISCHER SPANN	
9	B07500733	ET BLOCCO RUOTA DX	DECAL BLOCK WHEEL	DECAL BLOC ROUE DROIT	AUFKLEBER BLOCKIERUNG RAD RECH	
10	B07500750	ET BLOCCO RUOTA SX	DECAL BLOCK WHEEL	DECAL BLOC ROUE GAUCHE	AUFKLEBER BLOCKERUNG RAD LINKS	
11	B07500748	ET MANOPOLA APERTO CHIUSO	DECAL KNOB OPEN CLOSE	DECAL BOUTON OUVERT FERME	AUFKLEBER HANDGRIFF OEFF. SCHL	
12	B075P0018	ET LEG.RETE CON 2 RULLI	DECAL NET WITH 2 ROLLER	DECAL LIAGE FILET AVEC 2 ROUL	AUFKL. NETZBIND. MIT 2 WALZEN	
14	B07500513	ET ROT. FOLLE	DECAL IDLE ROTOR	DECAL ROTOR FOU	DECAL LEER ROTOR	
15	B07500512	ET MARCIA ROT.	DECAL ROTOR GEARSHIFT	DECAL ALLURE ROTOR	DECAL ROTOR GANGGETRIEBE	

USATE SEMPRE RICAMBI ORIGINALI
ALWAYS USE ORIGINAL SPARE PARTS
IMMER DIE ORIGINAL-ERSATZTEILE VERWENDEN
***EMPLOYEZ TOUJOURS LES PIECES DE RECHANGE ORI*GINALES**
UTILIZAR SIEMPRE REPUESTOS ORIGINALES

Servizio Assistenza Tecnica - After Sales Service
Servizio Ricambi - Spare Parts Service

maschio.com

DEALER:

B0D5P0108

MASCHIO Fienagione S.p.A.
Sede legale Cremona
Via Bredina, 6 - 26100 Cremona (Italy)
Tel. +39 0372 564610
Fax +39 0372 564625
info@maschio.com

ООО МАСКИО-ГАСПАРДО РУССИЯ
404130, ВОЛЖСКИЙ,
ВОЛГОГРАДСКАЯ обл.,
УЛ. ПУШКИНА, 117 Б., РОССИЯ
TEL. +7 8443 203100
FAX +7 8443 203101
info@maschio.ru

MASCHIO GASPARDO Poland sp z.o.o.
Ul. Wapienna 6/8 - 87 – 100 Torun Poland
Tel. +48 56 6506051
Fax +48 56 6506053
www.gaspardo.pl

MASCHIO FRANCE Sarl
1, Rue de Mérignan ZA
F - 45240 La Ferte St. Aubin
France
Tel. +33 (0) 2.38.64.12.12
Fax +33 (0) 2.38.64.66.79
info@maschio.fr

MASCHIO-GASPARDO ROMANIA S.R.L.
Strada Înfrátirii, F.N.
315100 Chisineu-Cris (Arad) - România
Tel. +40 257 307030
Fax +40 257 307040
info@maschio.ro

MASCHIO GASPARDO NORTH AMERICA, Inc.
112 3rd Avenue East
Dewitt IA 52742 - USA
Tel. +1 563 6596400
Fax +1 563 6596405
info@maschio.us

MASCHIO IBERICA S.L.
MASCHIO DEUTSCHLAND GMBH
MASCHIO-GASPARDO UCRAINA
GASPARDO-MASCHIO TURCHIA
MASCHIO-GASPARDO CINA
MASCHIO-GASPARDO INDIA

Research & Development MASCHIO Fienagione S.p.A.