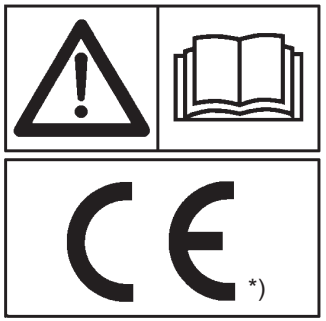

MASCHIO Fienagione S.p.A.

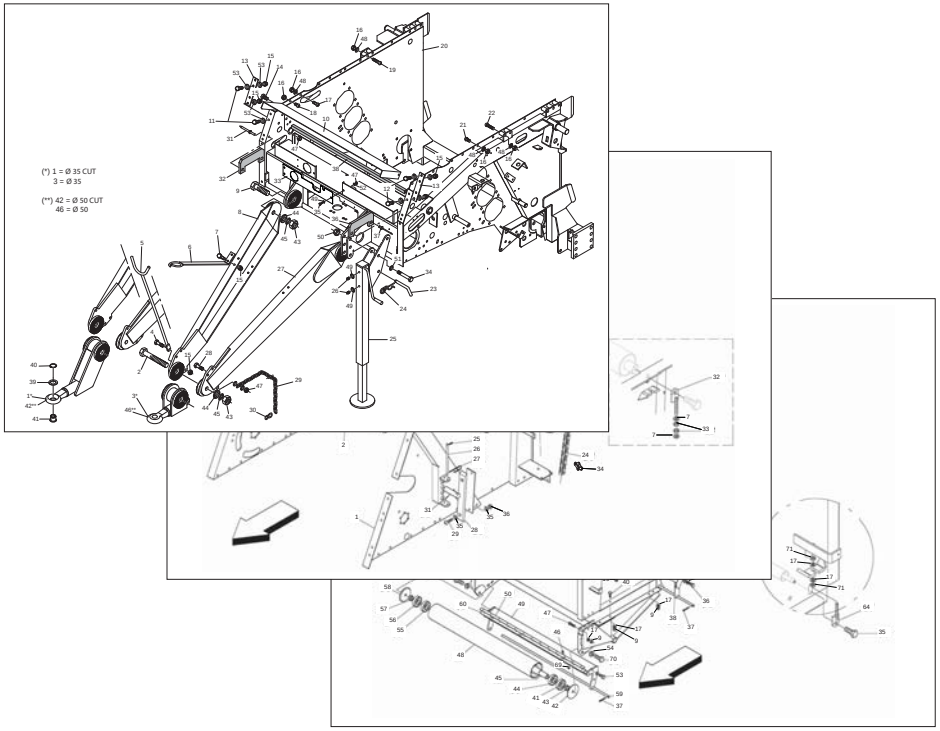

EXTREME 180

Cod: F07022343 2018-04

*) Valido per Paesi UE
*) Valid for EU member countries
*) Valable dans les Pays UE
*) Gilt für EU-Mitgliedsländer
*) Válido para Países UE

IT PARTI DI RICAMBIO
EN *SPARE PARTS*
DE ERSATZTEILE
FR *PIECES DÉTACHÉES*
ES PIEZAS DE REPUESTO

ITALIANO | ENGLISH | DEUTSCH | FRANÇAIS | ESPAÑOL

PARTI DI RICAMBIO

Le ordinazioni delle parti di ricambio vanno fatte presso i nostri concessionari di zona e devono essere sempre corredate dalle seguenti indicazioni:

- **Tipo, modello e numero di matricola dell'attrezzatura.** Tali dati sono stampigliati nell'apposita targhetta di cui è dotata ogni attrezzatura.

- **Numero di codice della parte richiesta** rilevabile dal catalogo ricambi.

- **Descrizione del particolare e quantità richiesta.**

- **Numero della tavola.**

- **Mezzo di trasporto.** Nel caso questa voce non sia specificata, la Ditta Costruttrice, pur dedicando a questo servizio una particolare cura, non risponde di eventuali ritardi di spedizione dovuti a cause di forza maggiore.
Le spese di trasporto si intendono sempre a carico del destinatario. La merce viaggia a rischio e pericolo del committente anche se venduta franco destino.

NOTA: Il termine (**Dx**) **Destro** o (**Sx**) **Sinistro** della macchina o di parti di essa, è inteso guardando la macchina dalla parte posteriore. Le eccezioni saranno indicate.

SPARE PARTS

Orders must be transmitted through our area dealers and should always include the following indications:

- ***Type, model and serial number of the machine.*** *These data are punched on the data plate with which every implement is equipped.*

- ***Code number of the required spare part.*** *This will be found in the spare parts catalogue.*

- ***Description of the part and required quantity.***

- ***Table number.***

- ***Means of dispatch.*** *If this item is not indicated, the Manufacturer, while dedicating particular care to this service, shall not be held responsible for delays in delivery caused by cases of force majeure.*
Transport expenses shall always be at the consignee's charge. The goods travel at the purchaser's risk and peril even when sold ex destination.

NOTE: *The symbols* ***(Dx) right*** *and* ***(Sx) left****, concerning the machine or single parts of it, are referred, as in the figure, to a rear view of them. Exceptions will be indicated.*

ERSATZTEILE

Die Bestellungen müssen bei unseren Gebietshändrer aufgegeben werden. Bei der Bestellung sind stets die folgenden Angaben zu machen:

- **Typ, Modell und Serien-Nummer des Geräts**. Diese Daten stehen auf dem Typenschild, mit dem jedes Gerät versehen ist.

- **Artikel Nr. der erforderlichen Ersatzteile.** Diese stehen im Ersatzteil-Katalog.

- **Beschreibung des Ersatzteils und die erforderliche Stückzahl.**

- **Tafelnummer.**

- **Versandmittel.** Wenn dieser Punkt nicht spezifiziert wird, haftet die Herstellerfirma nicht für etwaigen Lieferverzug aufgrund höherer Gewalt, auch wenn er diesen Service besonders aufmerksam abwickelt.
Die Frachtkosten gehen dagegen immer zu Lasten des Empfängers. Die Ware reist auf Gefahr und Risiko des Auftraggebers, auch wenn frei Haus Verkauft vereinbart worden ist.

N.B.: Die Merkzeichen (**Dx**) **rechts** und (**Sx**) **links** betreffen eine rückwärtige Aussicht der Maschine oder Teile von ihr (siehe Bild). Ausnahmen werden gezeigt.

PIECES DÈTACHÈES

Les ordres doivent être effectués auprés de nos concessionaires de zone en précisant les indications suivantes:

- ***Type, modéle et numéro de série de la machine****. Ces données sont gravées sur la plaque d'identification de chaque outil.*

- ***Numéro de code de la piéce détachée*** *indiqué sur le catalogue des piéces détachées.*

- ***Description de la piéce et quantité requise****.*

- ***Numéro de plan****.*

- ***Moyen d'expédition****. Si cette rubrique n'est pas indiquée, le Constructeur, bien que soucieux de ce service, ne répond pas des retards d'expédition pour des causes de force majeure.*
Les frais de transport sont toujours à la charge du destinataire. La marchandise voyage aux risques et périls de l'acheteur même si vendue franco de port.

N.B.: *Les références* ***(Dx) droit*** *et* ***(Sx) gauche*** *de la machine ou des parties de la même, est entendue, comme de la figure, en regardant la machine de derriere dans le sens de marche.*

RESPUESTOS

Los pedidos han de efectuarse en nuestros consesionarios de zona y deben incluir siempre las siguientes indicaciones:

- **Tipo, modelo y número de matrícula del equipo**. Dichos datos están impresos en la relativa placa presente en el equipo.

- **Número de código de la parte requerida** presente en el catálogo respuestos.

- **Descripcíon de la pieza y cantidad requerida**.

- **Numero de illustración**.

- **Medio de transporte**. En caso que este ítem no esté especificado, el Fabricante, aún prestando la debidas consideraciones para este aspecto, no responde por eventuales retardos de env'o debidos a causas de fuerza mayor.
Los gastos de transporte se consideran siempre a cargo del destinatario. La mercandería viaja bajo riesgo y peligro del comprador, incluso cuando se vende franco destino.

N.B.: La refencia (**Dx**) **derecha** o (**Sx**) **izquierda** de la máquina o de sus componentes, se entiende, como en la figura, mirando la máquina por la parte trasera. Se indicarán las excepciones.

N° Tavola	INDICE	Pagina
TAV_010	TELAIO INFERIORE	7
TAV_020	TELAIO SUPERIORE	9
TAV_030	PORTELLONE	11
TAV_510	BLOCCO CINGHIE	15
TAV_040	SEGNALATORI DI CARICAMENTO	17
TAV_050	RUOTE	19
TAV_060	CARTER	21
TAV_070	TRASMISSIONE	25
TAV_080	TRASMISSIONE CUT	29
TAV_090	ESPLOSO SCATOLA DI TRASMISSIONE	33
TAV_100	ESPLOSO SCATOLA DI TRASMISSIONE CUT	35
TAV_110	RULLI	37
TAV_120	INFALDATORE	39
TAV_130	CUT 13: TELAIO + ROTORE	41
TAV_140	CUT 13: TRAVERSA COLTELLI	45
TAV_150	SICUREZZA TRASMISSIONE MECCANICA CON BULLONE	47
TAV_160	SICUREZZA TRASMISSIONE AUTOMATICA "AFC"	49
TAV_170	BILANCIERE	51
TAV_180	PICK-UP M	53
TAV_190	PICK-UP L	55
TAV_200	PICK-UP M CUT	57
TAV_210	PICK-UP L CUT	59
TAV_220	COCLEE PICK-UP M	61
TAV_230	COCLEE PICK-UP L	63
TAV_240	TRASMISSIONE PICK-UP	65
TAV_250	ASPO	69
TAV_260	RULLO CONVOGLIATORE	71
TAV_270	IMPIANTO IDRAULICO PICK-UP	73
TAV_280	IMPIANTO IDRAULICO PICK-UP CUT	75
TAV_290	RUOTE PICK-UP	77
TAV_300	IMPIANTO IDRAULICO MACCHINA	79
TAV_310	CABLAGGIO	81
TAV_320	LEGATORE FILO	83
TAV_330	LEGATORE FILO: CASSONETTO	87
TAV_340	LEGATORE RETE (PARTE 1)	89
TAV_350	LEGATORE RETE (PARTE 2)	91
TAV_360	LEGATORE RETE (PARTE 3)	93
TAV_370	LEGATORE RETE (PARTE 4)	95
TAV_380	LEGATORE RETE (PARTE 5)	97

N° Table	*INDEX*	*Page*
TAV_010	*LOWER FRAME*	*7*
TAV_020	*UPPER FRAME*	*9*
TAV_030	*REAR GATE*	*11*
TAV_510	*BELTS LOCK*	*15*
TAV_040	*LOADER INDICATORS*	*17*
TAV_050	*WHEELS*	*19*
TAV_060	*CARTER*	*21*
TAV_070	*TRANSMISSION*	*25*
TAV_080	*CUT TRANSMISSION*	*29*
TAV_090	*GEARBOX PARTS*	*33*
TAV_100	*CUT GEARBOX PARTS*	*35*
TAV_110	*ROLLERS*	*37*
TAV_120	*FEEDING SYSTEM*	*39*
TAV_130	*CUT 13: FRAME + ROTOR*	*41*
TAV_140	*CUT 13: KNIVES CROSSBAR*	*45*
TAV_150	*TRANSMISSION SAFETY DEVICE MECHANICAL WITH BOLT*	*47*
TAV_160	*TRANSMISSION SAFETY DEVICE AUTOMATIC "AFC"*	*49*
TAV_170	*BELT TENSIONER ARM*	*51*
TAV_180	*PICK-UP M*	*53*
TAV_190	*PICK-UP L*	*55*
TAV_200	*PICK-UP M CUT*	*57*
TAV_210	*PICK-UP L CUT*	*59*
TAV_220	*AUGER PICK-UP M*	*61*
TAV_230	*AUGER PICK-UP L*	*63*
TAV_240	*PICK-UP TRANSMISSION*	*65*
TAV_250	*PICK-UP SHAFT*	*69*
TAV_260	*ROLLER CONVEYOR*	*71*
TAV_270	*PICK-UP HYDRAULIC SYSTEM*	*73*
TAV_280	*PICK-UP CUT HYDRAULIC SYSTEM*	*75*
TAV_290	*PICK-UP WHEEL*	*77*
TAV_300	*MACHINE HYDRAULIC SYSTEM*	*79*
TAV_310	*CONTROL SYSTEM*	*81*
TAV_320	*TWINE BINDER*	*83*
TAV_330	*TWINE BINDER: TWINE BOX*	*87*
TAV_340	*NET BINDER (PART 1)*	*89*
TAV_350	*NET BINDER (PART 2)*	*91*
TAV_360	*NET BINDER (PART 3)*	*93*
TAV_370	*NET BINDER (PART 4)*	*95*
TAV_380	*NET BINDER (PART 5)*	*97*

N° Tavola	INDICE	Pagina
TAV_390	IMPIANTO OLIATURA AUTOMATICA	101
TAV_400	IMPIANTO OLIATURA AUTOMATICA CUT	105
TAV_410	IMPIANTO LUCI + CUNEI	109
TAV_420	ESPULSORE	111
TAV_430	GRAFFATURA	113
TAV_440	KIT STAFFE SUPPLEMENTARI PER ROTOLO RETE	115
TAV_450	KIT FILM PLASTICO	117
TAV_460	KIT FINTI COLTELLI	119
TAV_470	FRENO IDRAULICO	121
TAV_480	DECAL "LOGO"	123
TAV_490	DECAL "CE"	125
TAV_500	DECAL "ISTRUZIONE"	127

N° Table	*INDEX*	*Page*
TAV_390	*AUTOMATIC OILING SYSTEM*	*101*
TAV_400	*AUTOMATIC OILING SYSTEM CUT*	*105*
TAV_410	*LIGHTS PLANT + CHOCKS*	*109*
TAV_420	*EJECTOR*	*111*
TAV_430	*STAPLING DEVICE*	*113*
TAV_440	*ADDITIONAL NET SUPPORT KIT*	*115*
TAV_450	*PLASTIC FILM KIT*	*117*
TAV_460	*FAKE KNIVES KIT*	*119*
TAV_470	*HYDRAULIC BRAKE*	*121*
TAV_480	*DECAL "LOGO"*	*123*
TAV_490	*DECAL "CE"*	*125*
TAV_500	*DECAL "INSTRUCTION"*	*127*

TAV_010

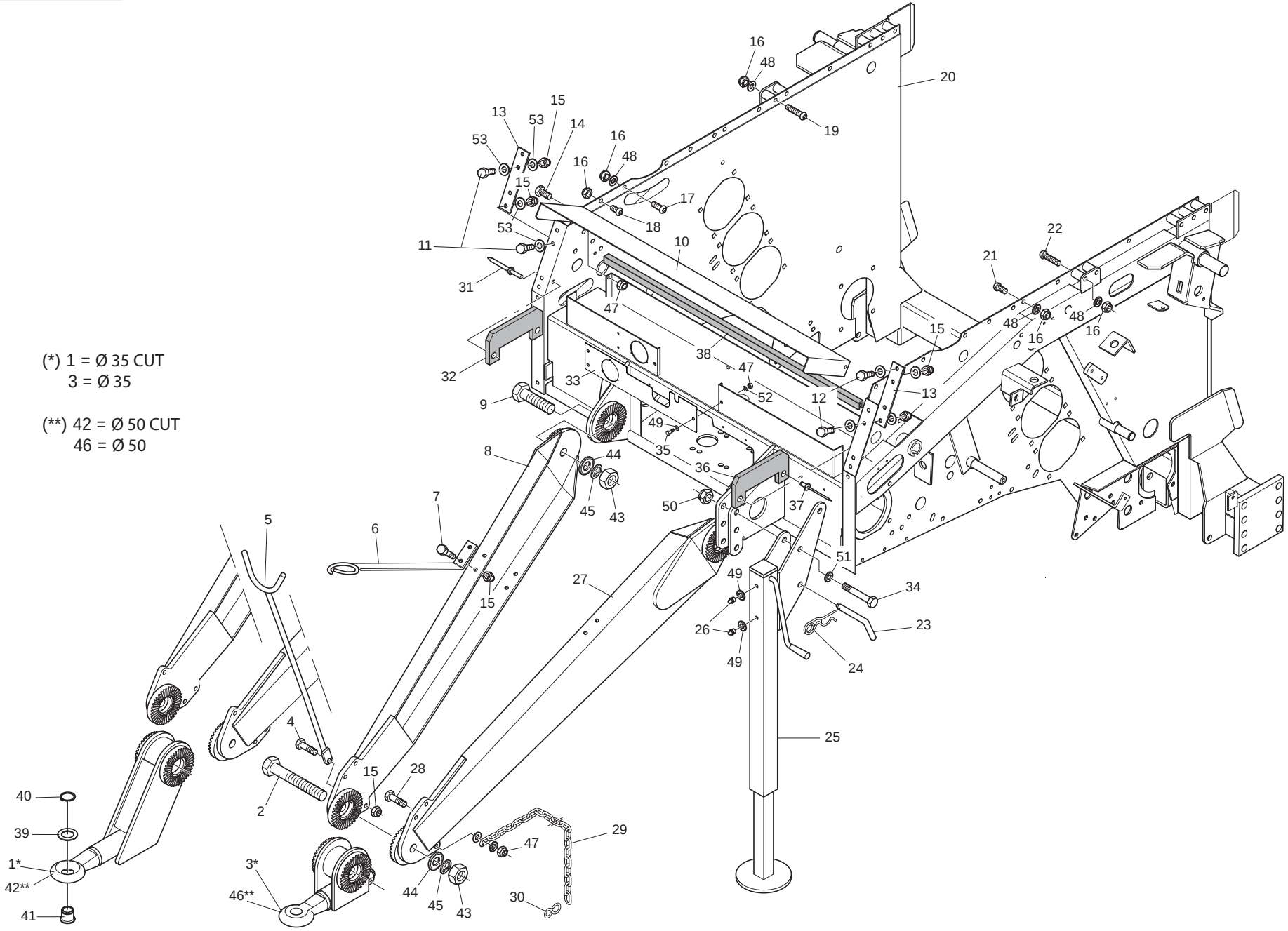

MASCHIO

TELAIO INFERIORE
LOWER FRAME

TAV_010

Pos.	Cod.	Descrizione	Description	Description	Benennung	Descripcion
1	B07S01030R	OCCHIONE DI TRAINO GIREV.	STANDARD TOWING EYE CUT	OEIL TRAINAGE PIVOTANT	STANDARD ZUGOESE CUT	
2	B00172499R	VITE M24X3X220 U5737 10.9 ZN	SCREW	VIS	SCHRAUBE	
3	B07S00975R	OCCHIONE DI TRAINO NL	STANDARD TOWING EYE	OEIL DE TRAINAGE	STANDARD ZUGOESE	
4	F01020479R	VITE M10X1,5X35 U5739 8.8ZN	SCR. M10X1,5X35 U5739 8.8ZN	VIS M10X1,5X35 U5739 8.8 ZN	SCHR. M10X1,5X35 U5739 8.8 ZN	TORN. M10X1,5X35 U5739 8.8 ZN
5	B07S00861R	SOSTEGNO CARDANO	CARDAN SHAFT SUPPORT	SUPPORT CARDAN	ZAPFWELLENSTUTZE	
6	B07H34241R	SOSTEGNO CANNE	HOSE SUPPORT	SUPPORT	SCHLAUCHHALTER	
7	F01020476R	VITE M10X1,5X30 U5739 8.8ZN	SCR. M10X1,5X30 U5739 8.8ZN	VIS M10X1,5X30 U5739 8.8 ZN	SCHRAUBE M10X1,5X30U5739 8.8ZN	TORNIL.M10X1,5X30 U5739 8.8 ZN
8	B07S00976R	MEZZO TIMONE DX NL	RIGHT DRAWBAR HALF	DEMI TIMON DROIT	RECHTE DEICHSELHAELFTE	
9	F01020369R	VITE M24X3X90 U5737 10.9ZB	SCREW M24X3X90 U5737 10.9ZB	VIS M24X 3X 90 U5737 10.9ZB	SCHR. M24X 3X 90 U5737 10.9ZB	TORN.M24X 3X 90 U5737 10.9ZB
10	B0C003216R	COPERCHIO CASSETTO	BOX LIT	COUVERCLE TIROIR	KASTENDECKEL	
11	F01020476R	VITE M10X1,5X30 U5739 8.8ZN	SCR. M10X1,5X30 U5739 8.8ZN	VIS M10X1,5X30 U5739 8.8 ZN	SCHRAUBE M10X1,5X30U5739 8.8ZN	TORNIL.M10X1,5X30 U5739 8.8 ZN
12	F01020476R	VITE M10X1,5X30 U5739 8.8ZN	SCR. M10X1,5X30 U5739 8.8ZN	VIS M10X1,5X30 U5739 8.8 ZN	SCHRAUBE M10X1,5X30U5739 8.8ZN	TORNIL.M10X1,5X30 U5739 8.8 ZN
13	B0C000036R	PIATTO	PLATE	PLAT	PLATTE	
14	F01020432R	VITE M8X1,25X16 U5739 8.8ZN	SCR. M8X1,25X16 U5739 8.8ZN	VIS M8 X1,25X16 U5739 8.8 ZN	SCHRAUBE M8X1,25X16U5739 8.8ZN	TORNILLO M8X1,25X16U5739 8.8ZN
15	F01230202R	DADO M10X 1,5 D985 8 ZN	NUT M10 D985	ECROU AUTOBL. M10	SELBSTSPERR.MUTTER M10	DADO AUTOBL. M10
16	F01230213R	DADO M12X1,75 U7474 CL8 ZN	NUT M12X1,75 U7474 6SZN	ECROU AUTOBL. M12	SELBSTSPERR.MUTTER M12	DADO AUTOBL. M12
17	B00471225R	VITE TTEI M12X 25-8.8 UNBRA	SCREW	VIS	SCHRAUBE TTEI M12X 25-8.8	
18	B00471220R	VITE TTEI M12X 20-8.8 UNBRA	SCREW	VIS	SCHRAUBE TTEI M12X 20-8.8	
19	B00471270R	VITE ZN M12X70 10.9 ISO 7380	SCREW	VIS	SCHRAUBE TTEI M12X70-8.8	
20	B07S00963R	TELAIO INFERIORE 120-160-180	LOWER FRAME	CHASSIS INFERIEUR	UNTERER GURTENFUHRUNGSRAHMEN	
21	B00471225R	VITE TTEI M12X 25-8.8 UNBRA	SCREW	VIS	SCHRAUBE TTEI M12X 25-8.8	
22	B00471270R	VITE ZN M12X70 10.9 ISO 7380	SCREW	VIS	SCHRAUBE TTEI M12X70-8.8	
23	B01300665R	SPINA SERVOTIMONE	SERVO DRAWBAR PIN	AXE SERVOTIMON	STUETZFUSS	
24	B011B0499R	SPINA A MOLLA A DOPPIO GIRO 4	PIN	GOUPILLE CLIPS	ZAPFEN	
25	B01800058R	SERVOTIMONE PER NL	SERVO DRAWBAR	SERVOTIMON	HILFSTEUER	
26	B04200810R	INGRAS HYDR M 8X1 DRITTO	GREASE	GRAISSEUR HYDRAULIQUE	GERADER SCHMIERNIPPEL M8X1	
27	B07S00977R	MEZZO TIMONE SX NL	LEFT DRAWBAR HALF	DEMI TIMON GAUCHE	LINKE DEICHSELHAELFTE	
28	F01020063R	VITE M8X1,25X35 U5737 8.8ZN	SCR. M8X1,25X35 U5737 8.8ZN	VIS M8X1,25X35 U5737 8.8ZN	SCHRAU. M8X1,25X35 U5737 8.8ZN	TORN. M8X1,25X35 U5737 8.8ZN
29	B03320404R	CATENA GENOVESE N.20 L=540	CHAIN	CHAINE	KETTE	
30	B01800052R	S PER CATENA D=6,5	S FOR CHAIN D=6,5	S POUR CHAINE D=6,5	S FUR KETTE	
31	B01082407R	RIVETTO A STRAPPO 2,4 X 7	RIVET 2,4 X 7			
32	B07V00078R	CHIUSURA CASSONETTO	RIGHT BOX CLOSING	FERMETURE BOITE DROITE	RECHTER KASTENVERSCHLUSS	
33	B0C6P0526R	CHIUSURA ANTERIORE SPRINTER	FRONT CLOSING SPRINTER			
34	F01020285R	VITE M16X2X100 U5737 8.8ZN	SCR. M16X2X100 U5737 8.8ZN	VIS M16X2X100 U5737 8.8 ZN	SCHR.M16X2X100 U5737 8.8 ZN	TORN.M16X2X100 U5737 8.8 ZN
35	F01020432R	VITE M8X1,25X16 U5739 8.8ZN	SCR. M8X1,25X16 U5739 8.8ZN	VIS M8 X1,25X16 U5739 8.8 ZN	SCHRAUBE M8X1,25X16U5739 8.8ZN	TORNILLO M8X1,25X16U5739 8.8ZN
36	B07V00079R	CHIUSURA CASSONETTO	LEFT BOX CLOSING	FERMETURE BOITE GAUCHE	LINKER KASTENVERSCHLUSS	
37	B01082407R	RIVETTO A STRAPPO 2,4 X 7	RIVET 2,4 X 7			
38	B07V00004R	GUARNIZIONE DI PROTEZIONE	PROTECTION SEAL			
39	B01300959R	FLANGIA 50X80X4	FLANGE 50X80X4	BRIDE	FLANSCH 50X80X4	
40	F02050203R	ANELLO E. DE 50X 2 U7435 C70	SEEGER RING D50X2 U7435 C70	ANEL SEEGER D50X2 U7435 C70	SEEGER RING D50X2 U7435 C70	ANILLO SEEGER D50X2 U7435 C70
41	B01300957R	BUSSOLA DI RIDUZIONE	REDUCTION BUSH	DOUILLE DE REDUCTION	REDUZIER BUCHSE	
42	B07S01091R	OCCHIONE TOPCUT 50	TOWING EYE 50 CUT	OEIL TOPCUT 50	ZUGOESE 50 CUT	
43	B00740724R	DADO M24X 2 D982 8 ZN	NUT	ECROU	MUTTER M24-8G	
44	B014R2440R	ROSETTA 24 UNI 5714-69 E DEIDR	WASHER	RONDELLE	BEILAGSSCHEIBE 24	
45	F01480261R	RONDELLA D24 UNI 1751 ZN	WASHER D24 U1751 ZN			
46	B07S01253R	OCCHIONE DI TRAINO 50	STANDARD TOWING EYE 50	OEIL DE TIRAGE	STANDARD ZUGOESE 50	
47	B00920208R	DADO M8X1 D985 8ZN	NUT M8X1 D985 8ZN	ECROU	SELBSTSICHERNDE MUTTER M8-5S	
48	B01421230R	ROS.M12 13X 20X2,0 U1749 ZN	WASHER	RONDELLE	SCHEIBE	
49	F01410051R	ROS.M8 8,4X 17X1,6 U6592 ZN	WASHER M8 8,4X17X1,6 U6592 ZN	RONDELLE M8 8,4X17X1,6 ZN	SCHEIBE M8 8,4X17X1,6 U6592 ZN	ARANDELA M8 8,4X17X1,6 U6592ZN
50	B00920516R	DADO M16X 1,5 D985 6S ZN	NUT M16X1,5 D985 6S ZN	ECROU	SELBSTSICHERNDE MUTTER M16-5S	
51	F01410100R	ROS.M16 17X 30X 3 U6592 ZN	WASHER M16 17X30X3 U6592 ZN	RONDELLE M16 17X30X3 ZN	SCHRAUBE M16 17X 30X3 U6592 ZN	ARANDELA M16 17X30X 3 U6592 ZN
52	F01420048R	ROS.M8 8,4X 24X 2 U6593 ZN	WASHER M8 8,4X 24X2 U6593 ZN	RONDELLE M8 8,4X24X 2 U6593 ZN	SCHEIBEN M8 8,4X24X 2 U6593 ZN	ARANDELA M8 8,4X 24X2 U6593 ZN
53	F01410062R	ROS.M10 10,5X 18X 2 U6592 ZN	WASHER M10 10,5X 18X 2 U6592	RONDELLE M10 10,5X18X2 ZN	DICHTUNGSRING M10 10,5X18X2 ZN	RONDANA M10 10,5X18X2 ZN

TAV_020

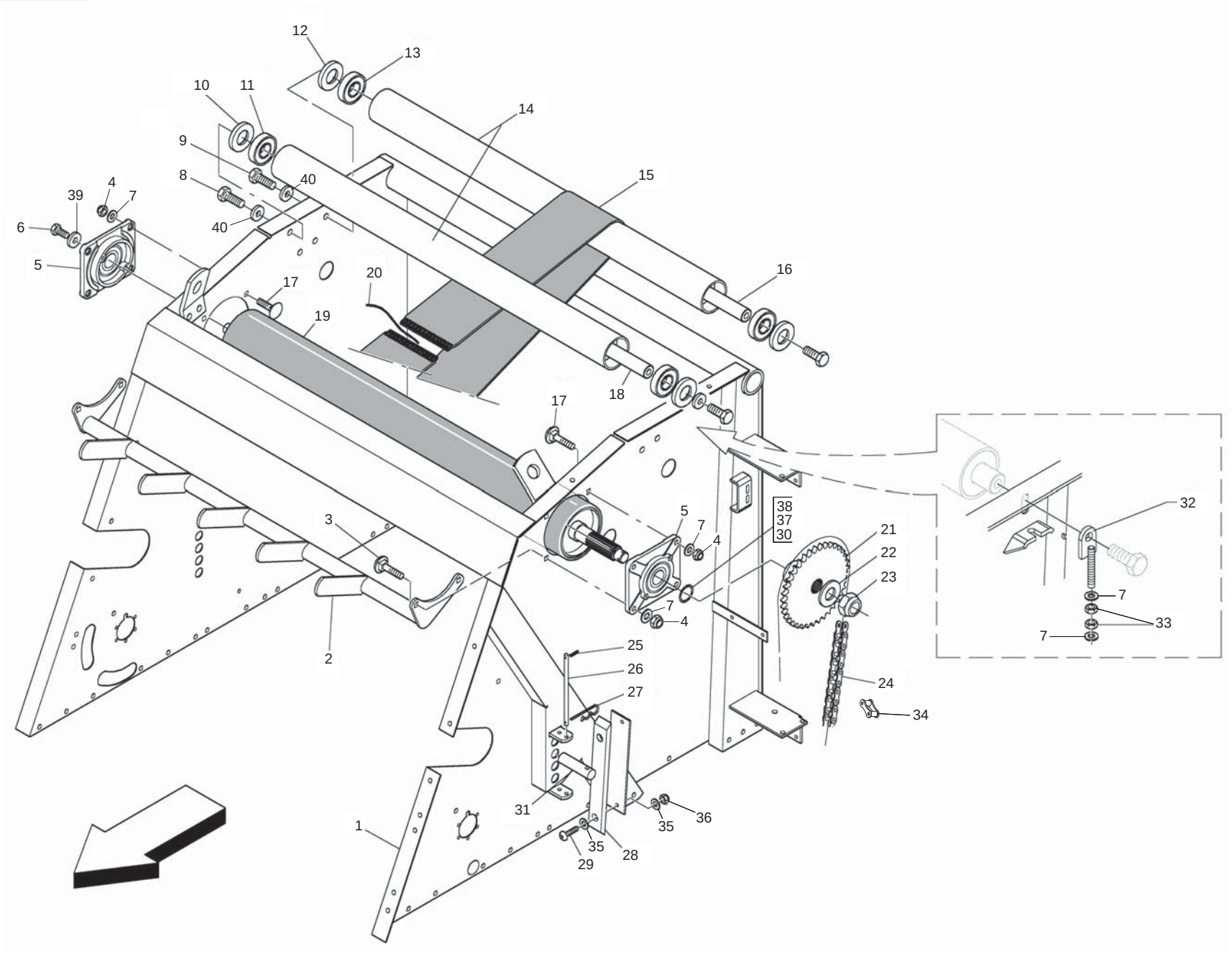

MASCHIO

cod. F07022343

TELAIO SUPERIORE
UPPER FRAME

TAV_020

Pos.	Cod.	Descrizione	Description	Description	Benennung	Descripcion
1	B07SP0504R	TELAIO SUPERIORE 180	HIGH FRAME 180			
2	B07S00941R	GUIDACINGHIE ANT.	FRONT BELT GUIDE	GUIDE-COURROIES ANTERIEUR	VORDERE GURTENFUEHRUNG	
3	B00523395R	VITE SPECIALE TTQST M12X45-8.8	SPECIAL SCREW	VIS SPECIALE	SCHRAUBE TTQST M12X 45-8.8	
4	F01230213R	DADO M12X1,75 U7474 CL8 ZN	NUT M12X1,75 U7474 6SZN	ECROU AUTOBL. M12	SELBSTSPERR.MUTTER M12	DADO AUTOBL. M12
5	B02700051R	SUPPORTO FLANGIATO	FLANGED SUPPORT	SUPPORT EMBOUTI	FLANSCHLAGER	
6	F01020564R	VITE M16X2X35 U5739 8.8ZN	SCR. M16X2X35 U5739 8.8ZN	VIS M 16X35	SCHRAUBE M 16X35	TORNILLO M 16X35
7	B01421230R	ROS.M12 13X 20X2,0 U1749 ZN	WASHER	RONDELLE	SCHEIBE	
8	F01020564R	VITE M16X2X35 U5739 8.8ZN	SCR. M16X2X35 U5739 8.8ZN	VIS M 16X35	SCHRAUBE M 16X35	TORNILLO M 16X35
9	F01020566R	VITE M16X2X40 U5739 8.8ZN	SCR. M16X2X40 U5739 8.8ZN	VIS M16X2X40 U5739 8.8 ZN	SCHRAUBE M16X2X40 U5739 8.8 ZN	TORNILLO M16X2X40 U5739 8.8 ZN
10	B01300623R	CHIUSURA RULLI FOLLI	IDLE ROLLER LOCK	FERMETURE ROULEAUX FOUX	UMLENKWALZENVERSCHLUSS	
11	F04010350R	CUSCINETTO 6307C 2HRS L100 50	BEARING 6307C 2HRS L100 50			
12	B01300623R	CHIUSURA RULLI FOLLI	IDLE ROLLER LOCK	FERMETURE ROULEAUX FOUX	UMLENKWALZENVERSCHLUSS	
13	F04010350R	CUSCINETTO 6307C 2HRS L100 50	BEARING 6307C 2HRS L100 50			
14	B03500172R	RULLO FOLLE	IDLE ROLLER	ROULEAU FOU	UMLENKWALZE	
15	B07600071R	CINGHIA PER EXT 280 EXT 180	BELT 180	COURROIES POUR EXT 280 EXT 180	GURT 180	
16	B03500214R	ALBERO LUNGO	LONG SHAFT	ARBRE LONG	LANGE WELLE	
17	B00523421R	VITE SPECIALE TTQST M12X35-8.8	SPECIAL SCREW	VIS SPCIALE	SCHRAUBE TTQST M12X 35-8.8	
18	B03500214R	ALBERO LUNGO	LONG SHAFT	ARBRE LONG	LANGE WELLE	
19	B03500234R	RULLO GOMMATO 3500217	RUBBER ROLLER	ROULEAU CAOUTCHOUTE	GUMMIWALZE	
20	B09962005R	CAVETTO GIUNZIONE MT.1	WIRE 2,5 PLAST.L.1MT	CABLE	KABEL 49 SCHNUREN	
21	B03400229R	INGR.RULLO GOMMATO Z=26-1	SPROCKET FOR RUBBER ROLLER Z=2	ENGRENAGE ROULEAU CAOUTCHOUTE	ZAHNRAD FUR GUMMI WALZE Z=26-1	
22	B014R3050R	ROSETTA 30 UNI 5714-69 E DEIDR	WASHER	RONDELLE	BEILAGSSCHEIBE	
23	F01230291R	DADO M30X2 D985 ZN	NUT M30X2 D985 ZN	ECROU AUTOB. M30X2 DIN 985 ZN	SELBSTSP. MU. M30X2 DIN 985 ZN	TUERCA AUTOB. M30X2 DIN 985 ZN
24	B030E1157R	CATENA RULLI ISO 16 B-1 157M	ROLLER CHAIN ISO 16 B-1 157M	CHAINE ROULEAUX	WALZENKETTE	
25	F02100034R	SPINA E.P. 3X 24 U6873 C70 BR	PIN EL. 3 X24 DIN 1481	FICHE EL. 3 X24 DIN 1481	SPANNSTIFT 3 X24 DIN 1481	CLAVIJA EL.3 X24 DIN 1481
26	B01300646R	SPINA DI FERMO	LOCK PIN	AXE D ARRET	ARRETIERSTIFT	
27	B01172574R	SPINA MOLLA 2,5 OCCH.SEMPL.	PIN	GOUPILLE CLIPS	STIFT	
28	B07631842R	GUIDA CATENA	CHAIN GUIDE	GUIDE	KETTENFUEHRUNG	
29	F01030208R	VITE M 8X1,25X 20 U7380 10.9ZN	SCREW M8X1,25X20 U7380 10.9ZN			
30	B01300845R	DISTANZIALE 40X50X4	SPACER	ENTRETOISE	DISTANZSCHEIBE 40X50X4	
31	B01300647R	SPINA DI REGOLAZIONE	ADJUSTMENT PIN	AXE DE REGLAGE	AUSRICHTEPASSSTIFT	
32	B07S01608R	REGOLATORE RULLO	ROLLER ADJUSTER	REGLEUR ROULEAU	WALZENEINSTELLER	
33	F01200293R	DADO M12X1,75 U5588 CL8 ZN	NUT M12X1,75 U5588 6S ZN	ECROU M12X1,75 U5588 6S ZN	MUTTER M12X1,75 U5588 6S ZN	TUERCA M12X1,75 U5588 6S ZN
34	B030E0017R	GIUNTO MOLL N26 ISO 16 B-1	SPRING JOINT N.26 ISO 16 B-1	JOINT RESSORT	KETTENFEDER	
35	F01410051R	ROS.M8 8,4X 17X1,6 U6592 ZN	WASHER M8 8,4X17X1,6 U6592 ZN	RONDELLE M8 8,4X17X1,6 ZN	SCHEIBE M8 8,4X17X1,6 U6592 ZN	ARANDELA M8 8,4X17X1,6 U6592ZN
36	B00920208R	DADO M8X1 D985 8ZN	NUT M8X1 D985 8ZN	ECROU	SELBSTSICHERNDE MUTTER M8-5S	
37	B01300126R	SPES. 40 48 1 ZINC.ST_013	SHIM	ENTRETOISE	DISTANZSTUECK 40 408 1	
38	B01300125R	SPES. 40 48 0,5 ZINCATO	SHIM GALV	ENTRETOISE GALV	DISTANZSTUECK 40 48 0,5	
39	B01515091R	RALLA 17 52 6	FIFTH WHEEL	BUTEE	SCHEIBE	
40	B01519319R	RALLA 16X38X5	FIFTH WHEEL	BUTEE	SCREIBE	

TAV_030

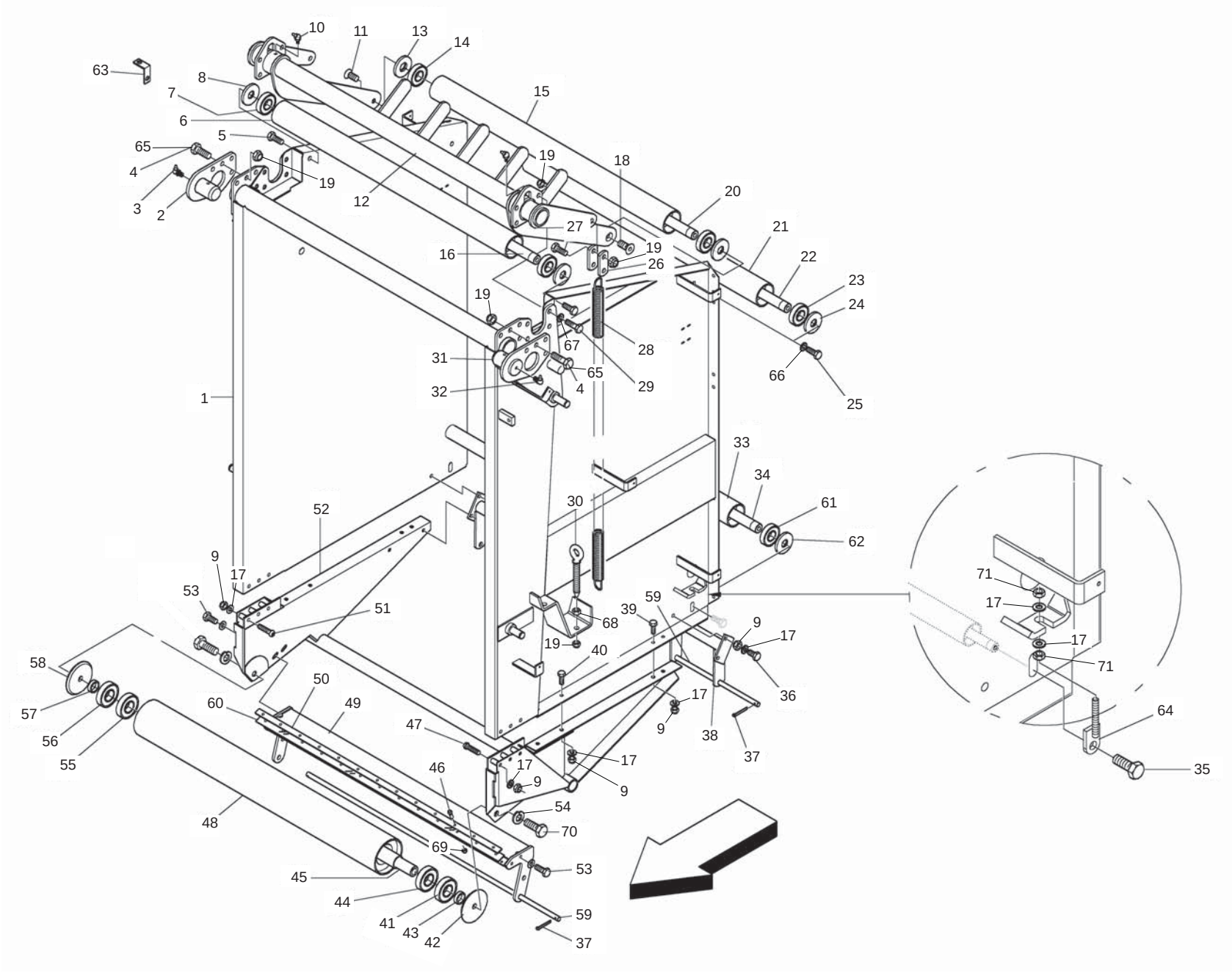

MASCHIO

cod. F07022343

PORTELLONE
REAR GATE

TAV_030

Pos.	Cod.	Descrizione	Description	Description	Benennung	Descripcion
1	B07S00964R	PORTELLONE SUPERIORE 180	SUPERIOR DOOR 180			
2	B07S01946R	CERNIERA DX PORTELLONE 220	RIGHT PIVOT TAILGATE 220			
3	F01100063R	ING.M10X1 7663-C 9SMNPB28 ZN	GREASE NIPPLE M10X1 7663	ING.M10X1 7663-C 9SMNPB28 ZN	ING.M10X1 7663-C 9SMNPB28 ZN	ING.M10X1 7663-C 9SMNPB28 ZN
4	F01020566R	VITE M16X2X40 U5739 8.8ZN	SCR. M16X2X40 U5739 8.8ZN	VIS M16X2X40 U5739 8.8 ZN	SCHRAUBE M16X2X40 U5739 8.8 ZN	TORNILLO M16X2X40 U5739 8.8 ZN
5	F01020564R	VITE M16X2X35 U5739 8.8ZN	SCR. M16X2X35 U5739 8.8ZN	VIS M 16X35	SCHRAUBE M 16X35	TORNILLO M 16X35
6	B03500172R	RULLO FOLLE	IDLE ROLLER	ROULEAU FOU	UMLENKWALZE	
7	F04010350R	CUSCINETTO 6307C 2HRS L100 50	BEARING 6307C 2HRS L100 50			
8	B01300623R	CHIUSURA RULLI FOLLI	IDLE ROLLER LOCK	FERMETURE ROULEAUX FOUX	UMLENKWALZENVERSCHLUSS	
9	F01230213R	DADO M12X1,75 U7474 CL8 ZN	NUT M12X1,75 U7474 6SZN	ECROU AUTOBL. M12	SELBSTSPERR.MUTTER M12	DADO AUTOBL. M12
10	B04210610R	INGRAS HYDR A 45 M 6X1	GREASE NIPPLE	GRAISSEUR HYDRAULIQUE	SCHMIERNIPPEL M6X1 45	
11	F01030148R	VITE M16X2X35 U5933 10.9ZD	SCREW M16X2X35 U5933 10.9ZD	VIS M16X2X35 U5933 10.9ZD	SCHRAUBE M16X2X35 U5933 10.9ZD	TORNILLO M16X2X35 U5933 10.9ZD
12	B07S01206R	II BILANCIERE 180	II ROCKER 180	II BALANCIER 180	II SCHWINGE 180	
13	B01300623R	CHIUSURA RULLI FOLLI	IDLE ROLLER LOCK	FERMETURE ROULEAUX FOUX	UMLENKWALZENVERSCHLUSS	
14	F04010350R	CUSCINETTO 6307C 2HRS L100 50	BEARING 6307C 2HRS L100 50			
15	B03500165R	RULLO FOLLE	IDLE ROLLER	ROULEAU FOU	UMLENKWALZE	
16	B03500214R	ALBERO LUNGO	LONG SHAFT	ARBRE LONG	LANGE WELLE	
17	B01421230R	ROS.M12 13X 20X2,0 U1749 ZN	WASHER	RONDELLE	SCHEIBE	
18	F01030148R	VITE M16X2X35 U5933 10.9ZD	SCREW M16X2X35 U5933 10.9ZD	VIS M16X2X35 U5933 10.9ZD	SCHRAUBE M16X2X35 U5933 10.9ZD	TORNILLO M16X2X35 U5933 10.9ZD
19	B00920516R	DADO M16X 1,5 D985 6S ZN	NUT M16X1,5 D985 6S ZN	ECROU	SELBSTSICHERNDE MUTTER M16-5S	
20	B03500213R	ALBERO CORTO	SHORT SHAFT	ARBRE COURT	KURZE WELLE	
21	B03500172R	RULLO FOLLE	IDLE ROLLER	ROULEAU FOU	UMLENKWALZE	
22	B03500214R	ALBERO LUNGO	LONG SHAFT	ARBRE LONG	LANGE WELLE	
23	F04010350R	CUSCINETTO 6307C 2HRS L100 50	BEARING 6307C 2HRS L100 50			
24	B01300623R	CHIUSURA RULLI FOLLI	IDLE ROLLER LOCK	FERMETURE ROULEAUX FOUX	UMLENKWALZENVERSCHLUSS	
25	F01020564R	VITE M16X2X35 U5739 8.8ZN	SCR. M16X2X35 U5739 8.8ZN	VIS M 16X35	SCHRAUBE M 16X35	TORNILLO M 16X35
26	B0C001868R	ATTACCO MOLLA	SPRING ATTACHMENT	ATTELAGE RESSORT	FEDERANSCHLUSS	
27	F01020252R	VITE M16X2X50 U5737 8.8ZN	SCR. M16X2X50 U5737 8.8 ZN	VIS M16X2X50 U5737 8.8 ZN	SCHRAUBE M16X2X50 U5737 8.8 ZN	TORNILLO M16X2X50 U5737 8.8 ZN
28	B01800037R	MOLLA II BILANCERE	II. BELTTENSIONER SPRING	RESSORT II BILANCIER	ZWEITER GURTENSPANNERFEDER	
29	F01020976R	VITE M16X 2X55 U5737 8.8 ZN	SCREW M16X 2X55 U5737 8.8 ZN			
30	B00528364R	OCCHIOLO PER TIRANTE M16	TIE ROD	OEIL POUR TIRANT	SPANNSTANGE	
31	B07S01945R	CERNIERA SX PORTELLONE 220	LEFT PIVOT TAILGATE 220			
32	F01100063R	ING.M10X1 7663-C 9SMNPB28 ZN	GREASE NIPPLE M10X1 7663	ING.M10X1 7663-C 9SMNPB28 ZN	ING.M10X1 7663-C 9SMNPB28 ZN	ING.M10X1 7663-C 9SMNPB28 ZN
33	B03500172R	RULLO FOLLE	IDLE ROLLER	ROULEAU FOU	UMLENKWALZE	
34	B03500214R	ALBERO LUNGO	LONG SHAFT	ARBRE LONG	LANGE WELLE	
35	F01020566R	VITE M16X2X40 U5739 8.8ZN	SCR. M16X2X40 U5739 8.8ZN	VIS M16X2X40 U5739 8.8 ZN	SCHRAUBE M16X2X40 U5739 8.8 ZN	TORNILLO M16X2X40 U5739 8.8 ZN
36	B00181255R	VITE M12X 55-8.8 UNI 5739	SCREW	VIS	VERZINKTE SCHRAUBE	
37	B01150430R	COPIGLIA 4X 30 U1336 ZN	GALV PIN	GOUPILLE GALV	SPLINT	
38	B07S00969R	GUIDACINGHIE POST.	REAR BELTS GUIDE	GUIDE-COURROIES POSTERIEUR	HINTERE GURTENFUEHRUNG	
39	F01020510R	VITE M12X1,75X30 U5739 8.8ZN	SCR. M12X1,75X30 U5739 8.8ZN	VIS M12X1,75X30 U5739 8.8ZN	SCHRAU.M12X1,75X30 U5739 8.8ZN	TORN. M12X1,75X30 U5739 8.8ZN
40	F01020510R	VITE M12X1,75X30 U5739 8.8ZN	SCR. M12X1,75X30 U5739 8.8ZN	VIS M12X1,75X30 U5739 8.8ZN	SCHRAU.M12X1,75X30 U5739 8.8ZN	TORN. M12X1,75X30 U5739 8.8ZN
41	F04010350R	CUSCINETTO 6307C 2HRS L100 50	BEARING 6307C 2HRS L100 50			
42	B01300590R	RALLA 20,5 128 10	FIFTH WHEEL	BUTEE	SCHEIBE 20,5 128 10	
43	B01300523R	DISTANZIALE 35X 45X12,5	SPACER	ENTRETOISE	DISTANZSTUECK 35X45X12,5	
44	F04010350R	CUSCINETTO 6307C 2HRS L100 50	BEARING 6307C 2HRS L100 50			
45	B03500237R	ALBERO CORTO	SHORT SHAFT	ARBRE COURT	KURZE WELLE	
46	B00470620R	VITE TTEI M 6X 20-8.8 UNBRA	SCREW	VIS	SCHRAUBE TTEI M6X20-10.9	
47	B00471270R	VITE ZN M12X70 10.9 ISO 7380	SCREW	VIS	SCHRAUBE TTEI M12X70-8.8	
48	B07S00959R	RULLO FOLLE PORTELLONE	TAIL GATE IDLE ROLLER	ROULEAU FOU PORTE EN ARRIERE	HECKKLAPPENUMLENKWALZE	
49	B07S01023R	RASCHIATORE PORTELLONE	TAILGATE SCRAPER	RACLEUR POSTERIEUR	HECKKLAPPENABSTREIFER	
50	B0C003205R	RINFORZO LAMA	BLADE STIFFENING BAR	RENFORT LAME	KLINGENVERSTEIFUNGSBLATT	
51	B00471270R	VITE ZN M12X70 10.9 ISO 7380	SCREW	VIS	SCHRAUBE TTEI M12X70-8.8	
52	B07SP1457R	TELAIO INFERIORE PORTELLONE	LOWER REAR GATE FRAME			
53	F01020508R	VITE M12X1,75X25 U5739 8.8ZN	SCR. M12X1,75X25 U5739 8.8ZN	VIS M12X1,75X25 U5739 8.8 ZN	SCHRAUBE M12X1,75X25U57398.8ZN	TORNIL.M12X1,75X25 U5739 8.8ZN
54	B0C004148R	RALLA DI FERMO	LOCK WASHER	BUTEE D ARRET	ANSCHLAGPLATTE	
55	F04010350R	CUSCINETTO 6307C 2HRS L100 50	BEARING 6307C 2HRS L100 50			
56	F04010350R	CUSCINETTO 6307C 2HRS L100 50	BEARING 6307C 2HRS L100 50			
57	B01300523R	DISTANZIALE 35X 45X12,5	SPACER	ENTRETOISE	DISTANZSTUECK 35X45X12,5	

TAV_030

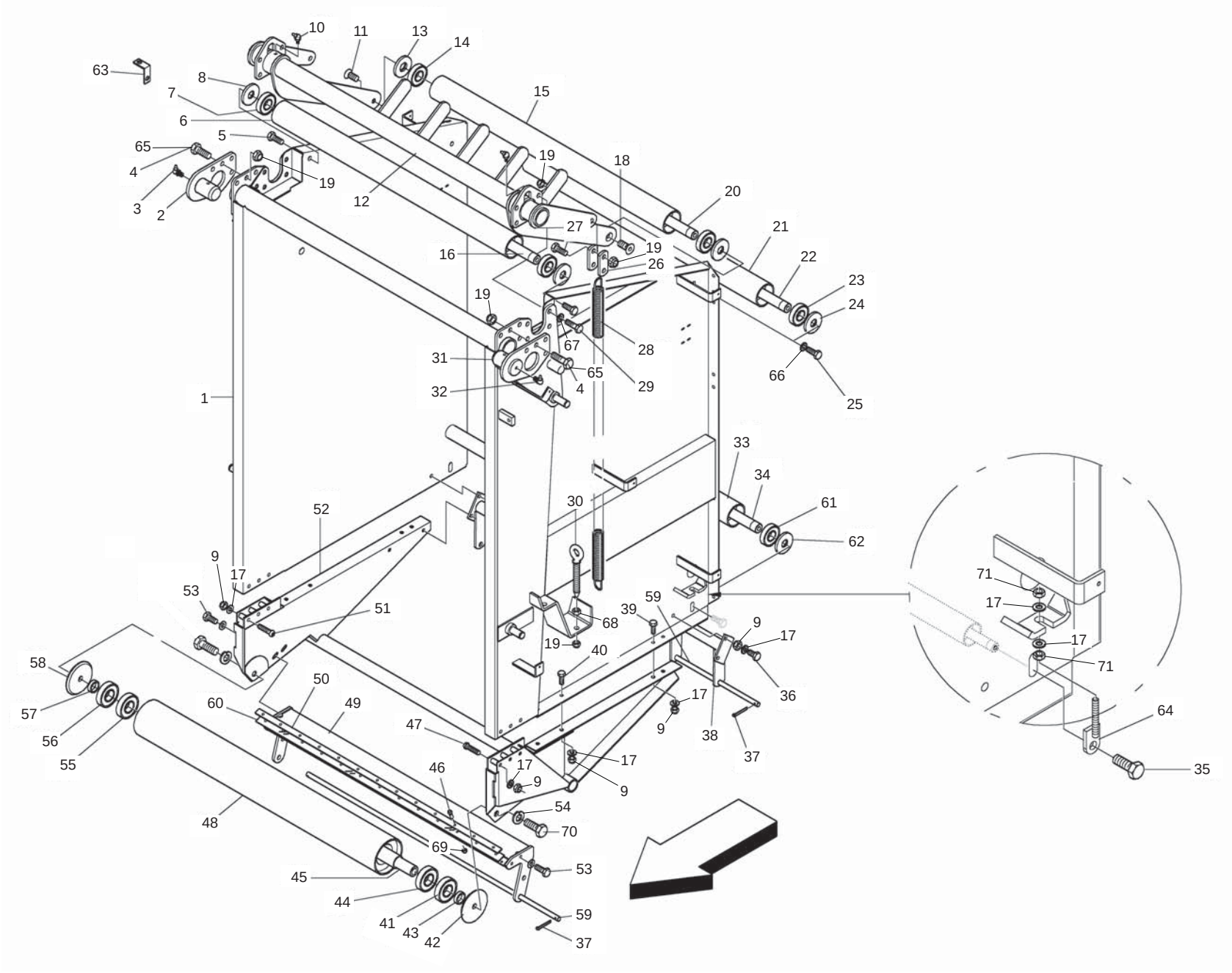

MASCHIO

cod. F07022343

PORTELLONE
REAR GATE

TAV_030

Pos.	Cod.	Descrizione	Description	Description	Benennung	Descripcion
58	B01300590R	RALLA 20,5 128 10	FIFTH WHEEL	BUTEE	SCHEIBE 20,5 128 10	
59	B01300628R	SPINA GUIDACINGHIE	BELT GUIDE PIN	GOUPILLE GUIDE-COURROIES	GURTENFUEHRUNGSBOLZEN	
60	B07U00023R	LAMA RASCH. FORNITURA PIENA	SCRAPER BLADE	LAME RACLEUR	ABSTREIFERBLATT	
61	F04010350R	CUSCINETTO 6307C 2HRS L100 50	BEARING 6307C 2HRS L100 50			
62	B01300623R	CHIUSURA RULLI FOLLI	IDLE ROLLER LOCK	FERMETURE ROULEAUX FOUX	UMLENKWALZENVERSCHLUSS	
63	B0C002357R	PIASTRINA ATTACCO CAVI	CABLE ATTACHMENT PLATE	PLAQUETTE ATTELAGE CABLES	KABELHALTERPLATTE	
64	B07S01608R	REGOLATORE RULLO	ROLLER ADJUSTER	REGLEUR ROULEAU	WALZENEINSTELLER	
65	F01020568R	VITE M16X2X45 U5739 8.8ZN	SCR. M16X2X45 U5739 8.8ZN	VIS M 16X 2X45 U5739 8.8 ZG	SCHRAUBE M 16X 2X45 U5739 8.8	TORNILLO M16X 2X45 U5739 8.8
66	B01519319R	RALLA 16X38X5	FIFTH WHEEL	BUTEE	SCREIBE	
67	F01410100R	ROS.M16 17X 30X 3 U6592 ZN	WASHER M16 17X30X3 U6592 ZN	RONDELLE M16 17X30X3 ZN	SCHRAUBE M16 17X 30X3 U6592 ZN	ARANDELA M16 17X30X 3 U6592 ZN
68	B00710516R	DADO M16X 2 U5588 6.8 ZN	NUT M16X2 U5588 6.8 ZN	ECROU	MUTTER M16-6S	
69	B00920106R	DADO M6X1 D985 8ZN	NUT	ECROU	SELBSTSICHERNDE MUTTER M6-5S	
70	F01020605R	VITE M20X2,5X50 U5739 8.8ZN	SCR. M20X2,5X50 U5739 8.8ZN	VIS M 20X2,5X50	SCHRAUBE M 20X2,5X50	TORNILLO M 20X2,5X50
71	F01200293R	DADO M12X1,75 U5588 CL8 ZN	NUT M12X1,75 U5588 6S ZN	ECROU M12X1,75 U5588 6S ZN	MUTTER M12X1,75 U5588 6S ZN	TUERCA M12X1,75 U5588 6S ZN

TAV_510

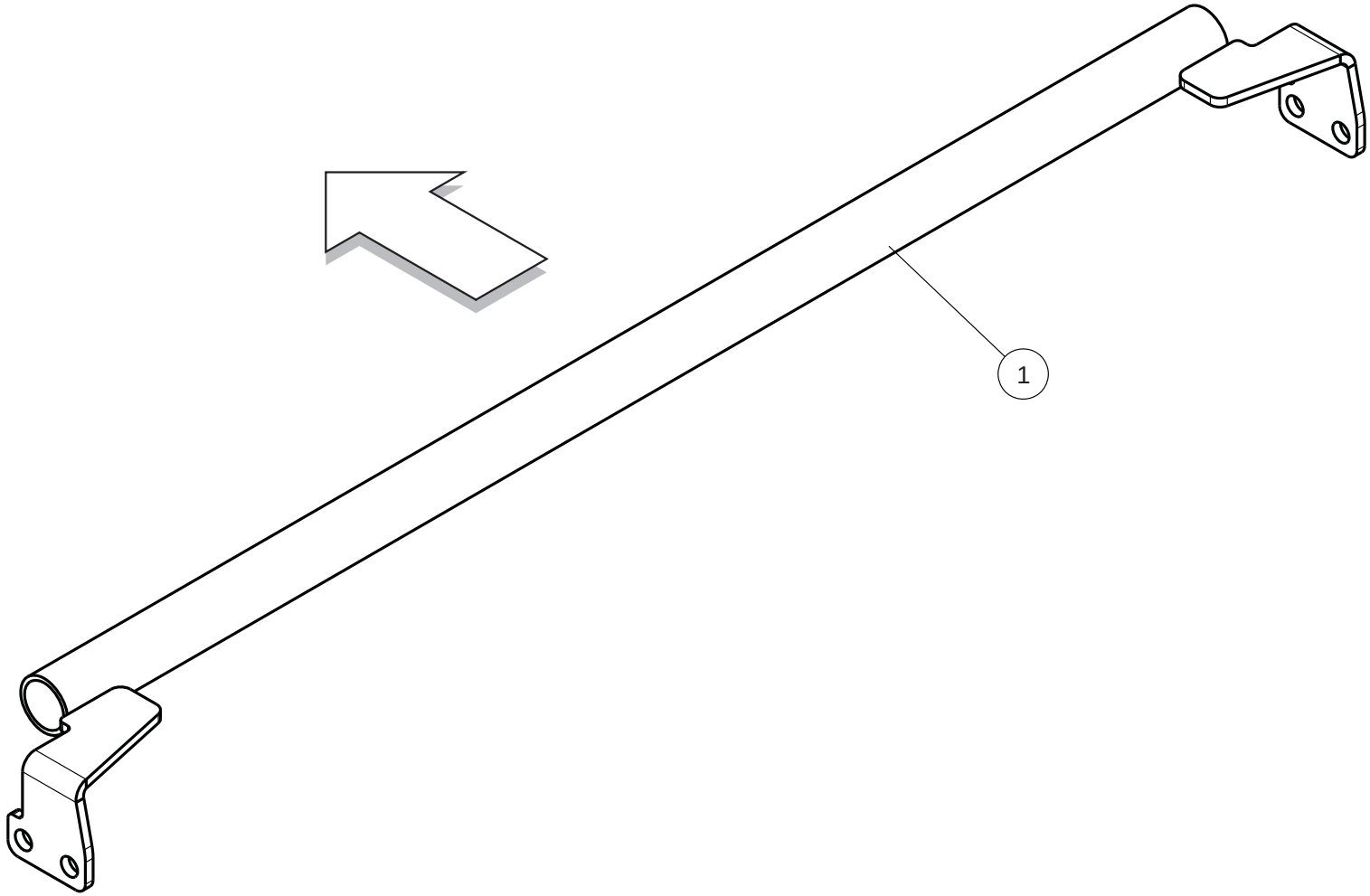

BLOCCO CINGHIE
BELTS LOCK

TAV_510

Pos.	Cod.	Descrizione	Description	Description	Benennung	Descripcion
1	B07S01901R	BLOCCO CINGHIE	BELT LOCK			

TAV_040

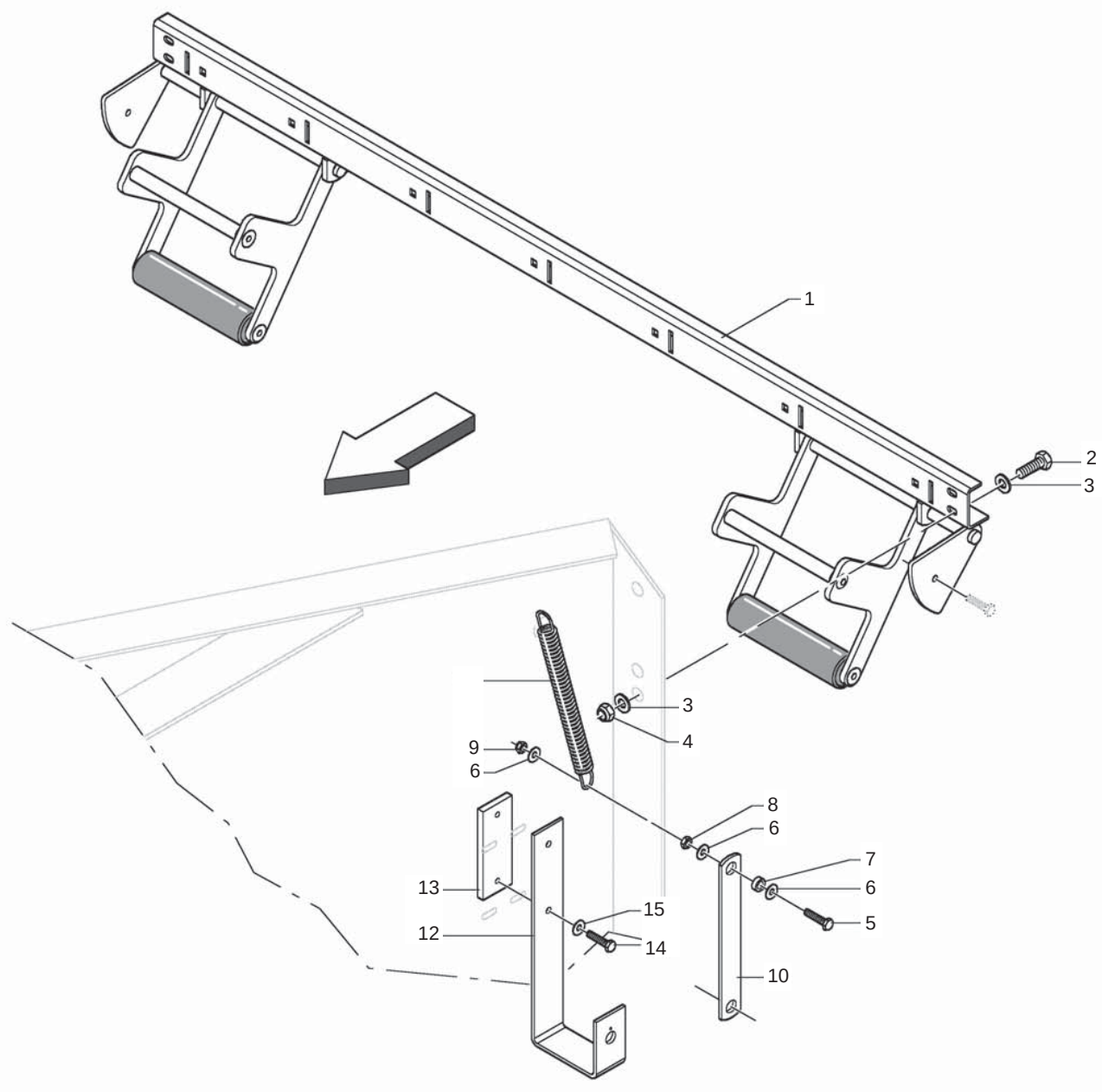

(*) 20 = SINISTRO
LEFT
(**) 27 = DESTRO
RIGHT

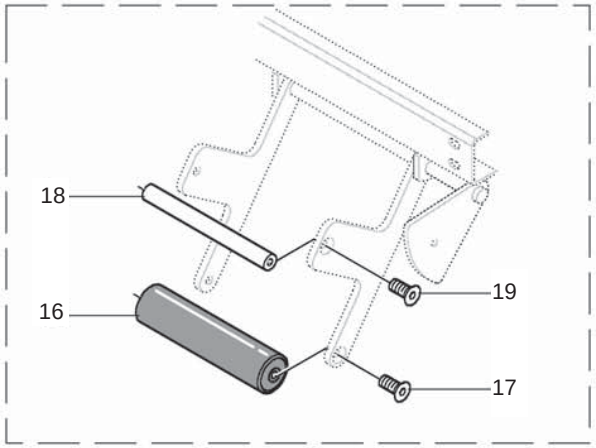

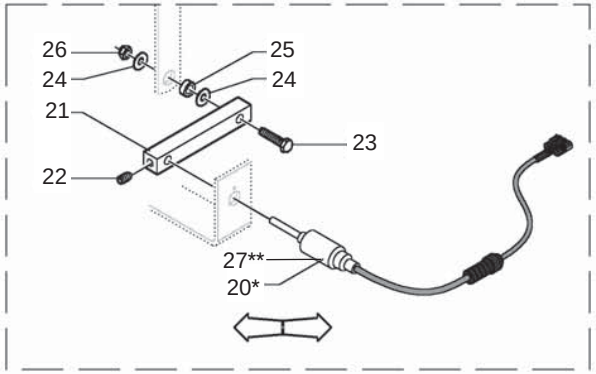

SEGNALATORI DI CARICAMENTO
LOADER INDICATORS

TAV_040

Pos.	Cod.	Descrizione	Description	Description	Benennung	Descripcion
1	B07S00951R	SEGNALATORI	INDICATORS	INDICATEURS	ANZEIGER	
2	F01020472R	VITE M10X1,5X25 U5739 8.8ZN	SCR. M10X1,5X25 U5739 8.8ZN	VIS M10X1,5X25 U5739 8.8 ZN	SCHRAUBE M10X1,5X25 U5739 8.8	TORNILLO 10X25 U5739 8.8 ZN
3	F01410062R	ROS.M10 10,5X 18X 2 U6592 ZN	WASHER M10 10,5X 18X 2 U6592	RONDELLE M10 10,5X18X2 ZN	DICHTUNGSRING M10 10,5X18X2 ZN	RONDANA M10 10,5X18X2 ZN
4	F01230202R	DADO M10X 1,5 D985 8 ZN	NUT M10 D985	ECROU AUTOBL. M10	SELBSTSPERR.MUTTER M10	DADO AUTOBL. M10
5	F01020413R	VITE M6X1X40 U5739 8.8ZN	SCR. M6X1X40 U5739 8.8ZN	VIS M 6X1X40	SCHRAUBE M 6X1X40	TORNILLO M 6X1X40
6	B01430620R	ROS.M6 6,4X 18X1,6 U6593 ZN	WASHER	RONDELLE	SCHEIBE	
7	B01300866R	BOCCOLA DI MOVIMENTO	BUSH	DOUILLE	BUCHSE	
8	F01200232R	DADO M6X1 U5588 CL8 ZN	NUT M6X1 U5588 6.8ZN	ECROU 6 UNI 5588 6.8 ZN	MUTTER 6 UNI 5588 6.8 ZN	TUERCA 6 UNI 5588 6.8 ZN
9	B00920106R	DADO M6X1 D985 8ZN	NUT	ECROU	SELBSTSICHERNDE MUTTER M6-5S	
10	B0C004227R	PIATTO SPOSTAMENTO SENSORE	SENSOR SHIFTING PLATE	PLAT COURSE SENSEUR	SENSORVERSCHIEBERPLATTE	
11	B01810409R	MOLLA T FILO D.2,5 DP14,5 L210	SPRING	RESSORT	T- FEDER	
12	B0C004231R	ATTACCO POTENZIOMETRO	POTENZIOMETER ATTACHMENT	ATTELAGE POTENTIOMETRE	SENSORANSCHLUSS	
13	B0C004008R	PIASTRINA FINECORSA	LIMIT SWITCH PLATE	PLAQUETTE FIN DE COURSE	ENDSCHALTERPLATTE	
14	F01020378R	VITE M5X0,8X16 U5739 8.8ZN	SCR. M5X0,8X16 U5739 8.8ZN	VIS M5X0,8X16 U5739 8.8ZN	SCHRAUBE M5X0,8X16 U5739 8.8ZN	TORNILLO M5X0,8X16 U5739 8.8ZN
15	F01420023R	ROS.M5 5,3X 15X1,5 U6593 ZN	WASHER M5 5,3X 15X1,5 U6593			
16	B07M00276R	RULLO SEGNALATORE	INDICATOR ROLLER	ROULEAU SIGNALEUR	ANZEIGEROLLE	
17	B00440820R	VITE TSPEI M 8X 20-10.9 UNI 5	SCREW	VIS	SCHRAUBE TSPEI M8X 20-10.9	
18	B03500024R	COLLEGAMENTO	CONNECTION	CONNEXION	VERBINDUNG	
19	B00440820R	VITE TSPEI M 8X 20-10.9 UNI 5	SCREW	VIS	SCHRAUBE TSPEI M8X 20-10.9	
20	B0E0P0028R	SENS.ANAL.CARICO CAMERA SX	SENSOR	SENSEUR	SENSOR LADUNGKAMMER LINKS	
21	B0C004228R	PIATTIN0	PLATE	PETIT PLAT	PLATTE	
22	B00430610R	VITE STEI M 6X10-12.9 UNI 5	SCREW	VIS	SCHRAUBE STEI M6X10-12.9	
23	F01020408R	VITE M6X1X30 U5739 8.8ZN	SCR. M6X1X30 U5739 8.8ZN	VIS M 6X1X30	SCHRAUBE M 6X1X30	TORNILLO M 6X1X30
24	B01430620R	ROS.M6 6,4X 18X1,6 U6593 ZN	WASHER	RONDELLE	SCHEIBE	
25	B01300866R	BOCCOLA DI MOVIMENTO	BUSH	DOUILLE	BUCHSE	
26	B00920106R	DADO M6X1 D985 8ZN	NUT	ECROU	SELBSTSICHERNDE MUTTER M6-5S	
27	B0E0P0029R	SENS.ANAL.CARICO CAMERA DX	PRESSURE SWITCH IFM PT3551	SENSEUR	SENSOR LADUNGKAMMER RECHTS	

TAV_050

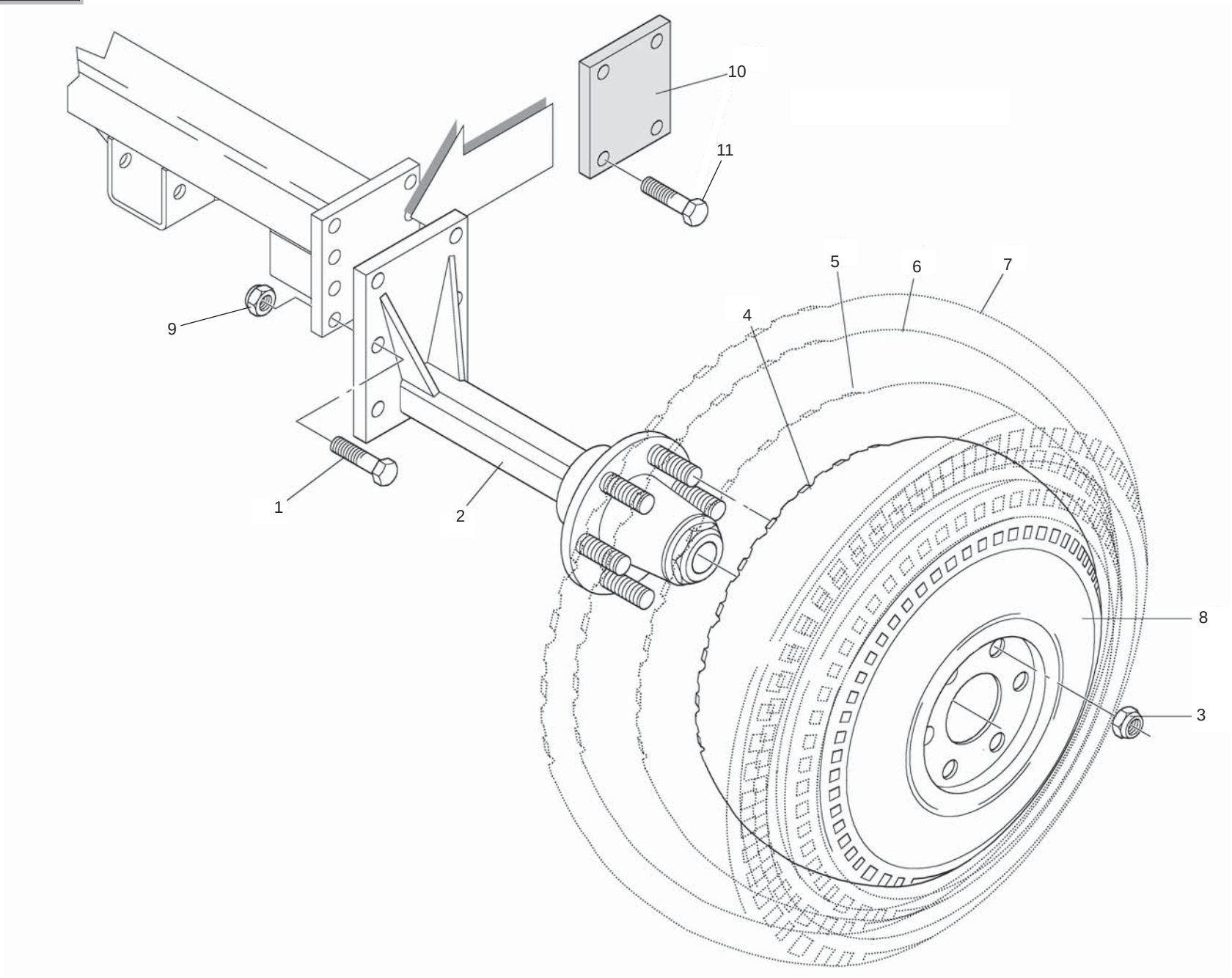

RUOTE
WHEELS

TAV_050

Pos.	Cod.	Descrizione	Description	Description	Benennung	Descripcion
1	F01230259R	DADO M20X 2,5 U7474 CL.8 ZN	NUT M20X 2,5 U7474 CL.8 ZN			
2	B07100026R	MOZZO CON FUSELLO E PIASTRA	HUB WITH STUB AXLE	MOYEU AVEC AXE ET PLAQUE	NABE MIT ACHSSCHENKEL	
3	B00821318R	DADO E SFERICO M18X1,5 ZINC.	NUT	ECROU	KUGELMUTTER M18X1,5	
4	B07100013R	RUOTA CPLTA 11,5 80-15,3 6F P	COMPLETE WHEEL 11,5 80-15,3	ROUE COMPLETE 11,5 80-15,3	KOMPLETTES RAD 11,5 80-15,3	
5	B07100022R	RUOTA CPLTA 400-15.5 6F P 14PR	COMPLETE WHEEL	ROUE 400-15.5	RAD KOMPLETT 400.15.5 6F P14PR	
6	B07100009R	RUOTA 15.0 55-17 10PR CERHIO 6	COMPLETE WHEEL 15.0 55-17			
7	B07100041R	RUOTA CPLTA 19.0 45-176F P14PR	COMPLETE TYRE	ROUE COMPLETE	KOMPLETTES RAD 19,0 45-17	
8	B07100009R	RUOTA 15.0 55-17 10PR CERHIO 6	COMPLETE WHEEL 15.0 55-17			
9	F01020309R	VITE M20X2,5X70 U5737 8.8ZN	SCR. M20X2,5X70 U5737 8.8ZN	VIS M20X2,5X70	SCHRAUBE M20X2,5X70	TORNILLO M20X2,5X70
10	B0C003765R	PIASTRA DI SPESSORAMENTO	SHIM PLATE	PLAQUE	DICHTUNGSPLATTE	
11	F01020987R	VITE M20X2,5X90 U5737 8.8 ZN	GALV.SCR.M20X2,5X90 U5737 8.8			

TAV_060

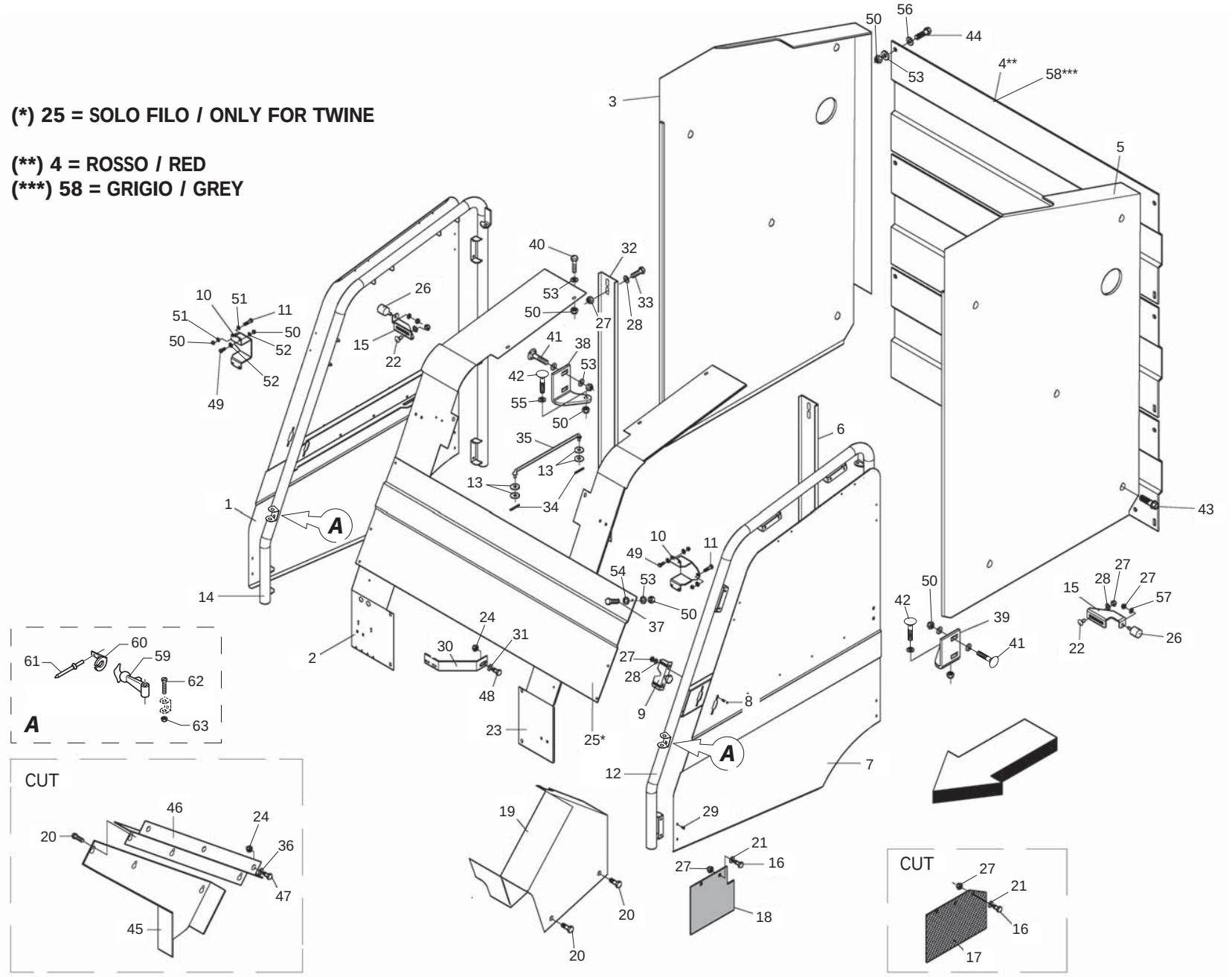

MASCHIO

cod. F07022343

CARTER
CARTER

TAV_060

Pos.	Cod.	Descrizione	Description	Description	Benennung	Descripcion
1	B0C3P0212R	CARTER DX 180	RIGHT CARTER 180			
2	B0C3P0205R	FASCIA DX 180	RIGHT BAND 180			
3	B0C003066R	CARTER DX PORTELLONE 180	180 TAILGATE RIGHT GUARD	TOLE DROITE DE LA PORTE 180	CARTER RECHTS TUER 180	
4	BSP000020R	CARTER POSTERIORE	BACK CARTER			
5	B0C003067R	CARTER SX PORTELLONE 180	180 TAILGATE LEFT GUARD	TOLE GAUCHE DE LA PORTE 180	CARTER LINKS TUER 180	
6	B0C003099R	CHIUSURA POSTER.SX	RIGHT REAR CLOSING	FERMETURE POSTERIEURE DROITE	VERSCHLUSS HINTEN LINKS	
7	B0C3P0211R	CARTER SX 180	LEFT CARTER 180			
8	F01030208R	VITE M 8X1,25X 20 U7380 10.9ZN	SCREW M8X1,25X20 U7380 10.9ZN			
9	B01800041R	CHIUS.SCHWARZ RIF.SV 941104-00	LOCK	FERMETURE	VERSCHLUSS SCHWARZ REF. SV. 9	
10	B0C4P0255R	ATTACCO CHIUSURA	ATTACHEMENT	ATTELAGE	VERSCHLUSSANSCHLUSS	
11	F01020116R	VITE M10X1,5X55 U5737 8.8ZN	SCR. M10X1,5X55 U5737 8.8ZN	VIS M10X1,5X60	SCHRAUBE M10X1,5X60	TORNILLO M10X1,5X60
12	B07SP0510R	TELAIO CARTER SX 180	FRAME CARTER LH 180			
13	F01420060R	ROS.M10 10,5X 30X2,5 U6593 ZG	GALV.WASHER 10,5X30X2,5 U6593	RONDELLE 10,5X30	SCHEIBE 10,5X30	ARANDELA 10,5X30
14	B07SP0511R	TELAIO CARTER DX 180	FRAME CARTER RH 180			
15	B0C6P0433R	CONTRASTO CHIUSURA	LOCK CONTRAST	CONTRASTE FERMETURE	VERSCHLUSS	
16	F01020436R	VITE M8X1,25X20 U5739 8.8ZN	SCR. M8X1,25X20 U5739 8.8ZN	VIS M8X1,25X 20 U5739 8.8 ZN	SCHRAUBE M8X1,25X20U5739 8.8ZN	TORN. M8X1,25X20 U5739 8.8 ZN
17	B07V00072R	PROT. IN GOMMA LAT.	SIDE RUBBERED PROTECTIONS	PROTECTION LATERALE EN CAOUT.	SEITER GUMMISCHUTZ	
18	B07V00080R	PROTEZ.LEG.FILO SPRINTER NEW	TWINE TYING KIT PROTECTION	PROTECTION LIAGE FICELLE SPRIN	GARNBINDUNGSSCHUTZ	
19	B0C000071R	CARTER	GUARDS	CARTER	CARTER	
20	B00370001R	VITE TE M 8X16 A SEZ.TRILOBATA	SCREW TRE M 8X16 SEZ TROUBLED	VIS	SCHRAUBE M 8X15	
21	F01420048R	ROS.M8 8,4X 24X 2 U6593 ZN	WASHER M8 8,4X 24X2 U6593 ZN	RONDELLE M8 8,4X24X 2 U6593 ZN	SCHEIBEN M8 8,4X24X 2 U6593 ZN	ARANDELA M8 8,4X 24X2 U6593 ZN
22	F01060040R	VITE M8X1,25X20 U5731 8.8ZN	SCR. M8X1,25X20 U5732 4.6ZG	VIS M8X1,25X20 U5732 4.6 ZN	SCHRA. M8X1,25X20 U5732 4.6 ZN	TORN. M8X1,25X20 U5732 4.6 ZN
23	B0C3P0204R	FASCIA SX 180	LEFT BAND 180			
24	F01230059R	DADO M12X1,75 D982 8ZN	LOCK-NUT M12X1,75 D982 8ZN	ECR.AUTO-FREI.M12X1,75 ZN	SICHERUNGMUT.M12X1,75 D982 8ZN	TUER.DE SEGUR.M12X1,75 D982 ZN
25	B0C002454R	CARTER ANT.	FRONT GUARD	CARTER ANTERIEUR	VERDERER GEHAEUSER	
26	B01800082R	SILENT BLOCK 30X30-M8X25	SILENT BLOCK 30X30-M8X20	SILENT BLOCK 30X30-M8X20	SILENTBLOCK 30X30-M8X20	
27	B00920208R	DADO M8X1 D985 8ZN	NUT M8X1 D985 8ZN	ECROU	SELBSTSICHERNDE MUTTER M8-5S	
28	F01410051R	ROS.M8 8,4X 17X1,6 U6592 ZN	WASHER M8 8,4X17X1,6 U6592 ZN	RONDELLE M8 8,4X17X1,6 ZN	SCHEIBE M8 8,4X17X1,6 U6592 ZN	ARANDELA M8 8,4X17X1,6 U6592ZN
29	B01000011R	RIVETTO STR. 6X12 U9200A AL	RIVET 6X12 U9200A AL	RIVET	ABREISSNIETEN 6X15	
30	B0C002391R	RINFORZO FASCIA DX	RIGHT BAND REINFORCEMENT	RENFORCEMENT BANDE DROIT	RECHTE BANDVERSTARKUNG	
31	B01421230R	ROS.M12 13X 20X2,0 U1749 ZN	WASHER	RONDELLE	SCHEIBE	
32	B0C003100R	CHIUSURA POSTER.DX	LEFT REAR CLOSING	FERMETURE POSTERIEURE GAUCHE	VERSCHLUSS HINTEN RECHTS	
33	F01020436R	VITE M8X1,25X20 U5739 8.8ZN	SCR. M8X1,25X20 U5739 8.8ZN	VIS M8X1,25X 20 U5739 8.8 ZN	SCHRAUBE M8X1,25X20U5739 8.8ZN	TORN. M8X1,25X20 U5739 8.8 ZN
34	F02100065R	SPINA E.P. 4X 30 U6873 C70 BR	PIN EL. 4X30 DIN 1481	GOUPILLE EL.4 X30 DIN 1481	SPANNSTIFT 4X30 DIN 1481	CLAVIJA EL.4 X30 DIN 1481
35	B07SP0278R	ASTA DI APERTURA	OPEN ROD	BARRE D OUVERTURE	OEFFNUNGSSTANGE	
36	B01421230R	ROS.M12 13X 20X2,0 U1749 ZN	WASHER	RONDELLE	SCHEIBE	
37	F01020479R	VITE M10X1,5X35 U5739 8.8ZN	SCR. M10X1,5X35 U5739 8.8ZN	VIS M10X1,5X35 U5739 8.8 ZN	SCHR. M10X1,5X35 U5739 8.8 ZN	TORN. M10X1,5X35 U5739 8.8 ZN
38	B0C6P0435R	CERNIERA DX	RIGHT HINGE			
39	B0C6P0434R	CERNIERA SX	LEFT HINGE			
40	F01020470R	VITE M10X1,5X20 U5739 8.8ZN	SCR. M10X1,5X20 U5739 8.8ZN	VIS M10X1,5X20 U5739 8.8 ZN	SCHRAUBE M10X1,5X20 U5739 ZN	TORNILLOM10X1,5X20 U5739 8.8ZN
41	F01060069R	VITE M10X1,5X30 U5731 8.8ZN	SCR. M10X1,5X30 U5732 4.6ZN	BOULON 10X30 5732 4.6	SCHRAUBE 10X30 5732 4.6	PERNO 10X30 5732 4.6
42	F01060069R	VITE M10X1,5X30 U5731 8.8ZN	SCR. M10X1,5X30 U5732 4.6ZN	BOULON 10X30 5732 4.6	SCHRAUBE 10X30 5732 4.6	PERNO 10X30 5732 4.6
43	B00370001R	VITE TE M 8X16 A SEZ.TRILOBATA	SCREW TRE M 8X16 SEZ TROUBLED	VIS	SCHRAUBE M 8X15	
44	F01020470R	VITE M10X1,5X20 U5739 8.8ZN	SCR. M10X1,5X20 U5739 8.8ZN	VIS M10X1,5X20 U5739 8.8 ZN	SCHRAUBE M10X1,5X20 U5739 ZN	TORNILLOM10X1,5X20 U5739 8.8ZN
45	B07S01212R	CARTER TRASMISSIONE ROT.	ROTOR TRANSMISSION COVER	CARTER TRANSMISSION ROTOR	ROTORANTRIEBABDECKBLECH	
46	B0C002663R	ATTACCO CARTER CUT	COVER PLATE ATTACHMENT	ATTELAGE CARTER CUT	ABECKBLECHHALTERUNG	
47	F01020508R	VITE M12X1,75X25 U5739 8.8ZN	SCR. M12X1,75X25 U5739 8.8ZN	VIS M12X1,75X25 U5739 8.8 ZN	SCHRAUBE M12X1,75X25U57398.8ZN	TORNIL.M12X1,75X25 U5739 8.8ZN
48	F01020512R	VITE M12X1,75X35 U5739 8.8ZN	SCR. M12X1,75X35 U5739 8.8ZN	VIS M12X1,75X35 5739 8.8 ZN	SCHR. M12X1,75X35 5739 8.8 ZN	TORN. M12X1,75X35 5739 8.8 ZN
49	B00321025R	VITE TTQST M10X 25-4.6 UNI 573	SCREW	VIS	SCHRAUBE	
50	F01230202R	DADO M10X 1,5 D985 8 ZN	NUT M10 D985	ECROU AUTOBL. M10	SELBSTSPERR.MUTTER M10	DADO AUTOBL. M10
51	B00710310R	DADO M10X1,25 U5588 6S ZN	NUT	ECROU	MUTTER M10-6S	
52	F01420060R	ROS.M10 10,5X 30X2,5 U6593 ZG	GALV.WASHER 10,5X30X2,5 U6593	RONDELLE 10,5X30	SCHEIBE 10,5X30	ARANDELA 10,5X30
53	F01410062R	ROS.M10 10,5X 18X 2 U6592 ZN	WASHER M10 10,5X 18X 2 U6592	RONDELLE M10 10,5X18X2 ZN	DICHTUNGSRING M10 10,5X18X2 ZN	RONDANA M10 10,5X18X2 ZN
54	F01420060R	ROS.M10 10,5X 30X2,5 U6593 ZG	GALV.WASHER 10,5X30X2,5 U6593	RONDELLE 10,5X30	SCHEIBE 10,5X30	ARANDELA 10,5X30
55	F01410062R	ROS.M10 10,5X 18X 2 U6592 ZN	WASHER M10 10,5X 18X 2 U6592	RONDELLE M10 10,5X18X2 ZN	DICHTUNGSRING M10 10,5X18X2 ZN	RONDANA M10 10,5X18X2 ZN
56	F01420060R	ROS.M10 10,5X 30X2,5 U6593 ZG	GALV.WASHER 10,5X30X2,5 U6593	RONDELLE 10,5X30	SCHEIBE 10,5X30	ARANDELA 10,5X30
57	B00710208R	DADO M 8X1,25 U5588 6.8 ZN	NUT	ECROU	MUTTER M8-6S	

TAV_060

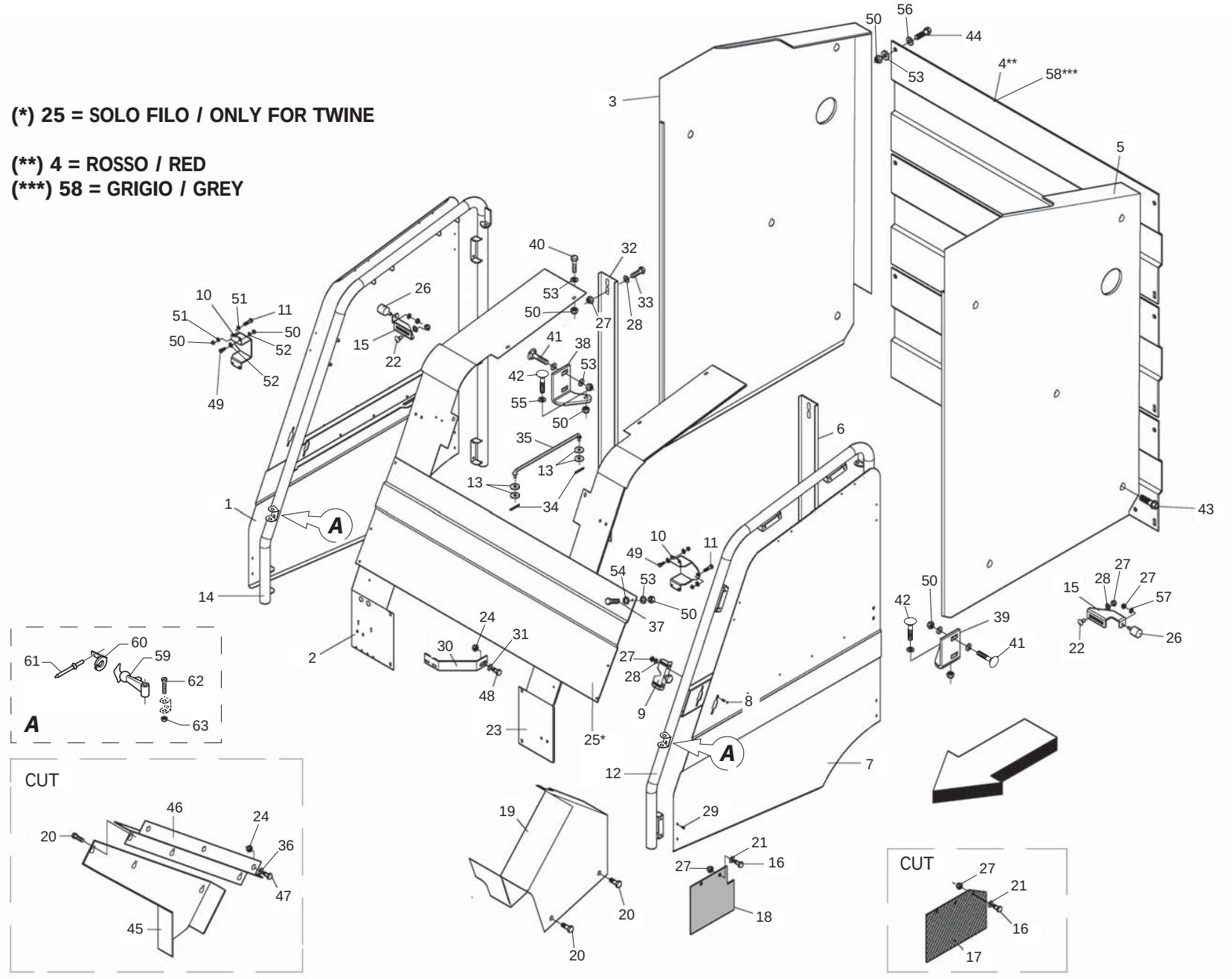

MASCHIO

cod. F07022343

CARTER
CARTER

TAV_060

Pos.	Cod.	Descrizione	Description	Description	Benennung	Descripcion
58	BSP000021R	CARTER POSTERIORE	CARTER BACK			
59	B01950002R	TIRANTE AGGANCIO COFANO	TIE HOOK HOOD	TIRANT	SPANNSTANGE	
60	B01950004R	OCCHIELLO ACQ CON 1950003	EYELET	OEIL	SE	
61	B01080311R	RIVETTO STR. 3,8X11 U9200A AL	RIVET	RIVET	NIET	
62	F01020024R	VITE M5X0,8X40 U5737 8.8ZN	SCR. M5X0,8X40 U5737 8.8ZN	VIS 5X40 5737 8.G ZN	SCHRAUBE 5X40 5737 8.G ZN	TORNILLO 5X40 5737 8.G ZN
63	B00920005R	DADO AUTOB.BASSO M 5-5S DIN985	NUT	ECROU	SELBSTSICHERNDE MUTTER M5-5S	

TAV_070

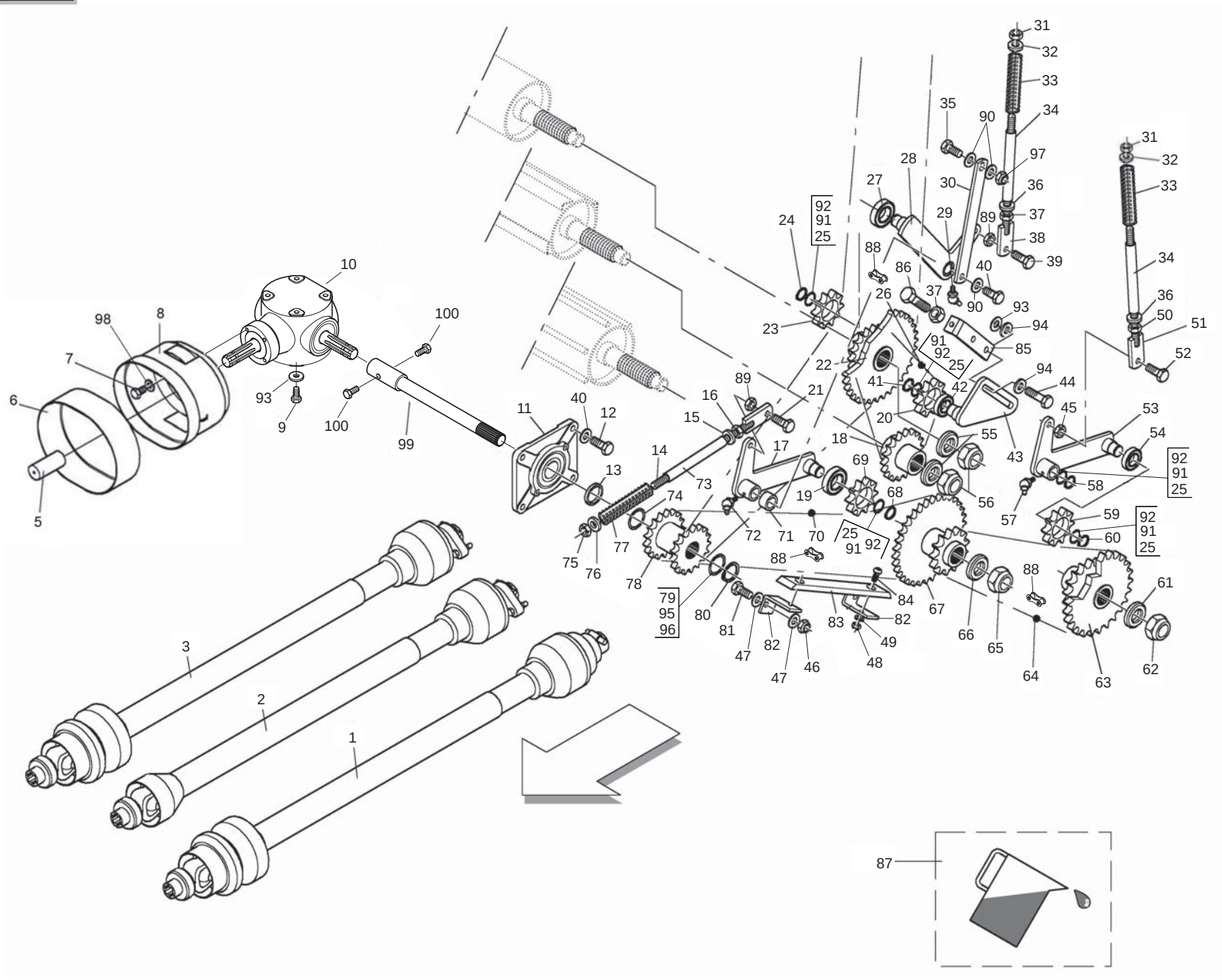

MASCHIO

cod. F07022343

TRASMISSIONE
TRANSMISSION

TAV_070

Pos.	Cod.	Descrizione	Description	Description	Benennung	Descripcion
1	B03600092R	CAR BO7 Z6-Z6 OMCAM 2500 L1589	PTO BO7 Z6-Z6 OMCAM 2500 L1589	CARDAN	TRAKTOR KARDAN BYPY656	
2	B03600120R	CAR BO4 Z6-Z6 OMFRZ 1350 L1577	PTO BO4 Z6-Z6 OMFRZ 1350 L1577	CARDAN	GELENKWELLE T.BYPY654 OC F	
3	B03600076R	CAR BO7 Z6-Z6 OMFRZ 1700 L1546	PTO BO7 Z6-Z6 OMFRZ 1700 L1546	CARDAN	GELENKWELLE	
5	B07V00044R	PROLUNGA PER CUFFIA OVALE	COVER EXTENTION	RALLONGE POUR BOL	VERLAENGERUNG FUER SCHUTZHAUBE	
6	F01020472R	VITE M10X1,5X25 U5739 8.8ZN	SCR. M10X1,5X25 U5739 8.8ZN	VIS M10X1,5X25 U5739 8.8 ZN	SCHRAUBE M10X1,5X25 U5739 8.8	TORNILLO 10X25 U5739 8.8 ZN
7	G19002131R	PROTEZIONE P.D.P.	PDP GUARD			
8	B07V00059R	PROT. CARDANO FFPRO	COVER PROTECTION	PROTECTION CARDAN	ZAPFWELLENSCHUTZHAUBE FFPRO	
9	F01020512R	VITE M12X1,75X35 U5739 8.8ZN	SCR. M12X1,75X35 U5739 8.8ZN	VIS M12X1,75X35 5739 8.8 ZN	SCHR. M12X1,75X35 5739 8.8 ZN	TORN. M12X1,75X35 5739 8.8 ZN
10	B03900177R	SCAT.BP 2050-1 1-RL-S ALB.	GEAR BOX	BOITE	GETRIEBE BYPY 2050	
11	B02700051R	SUPPORTO FLANGIATO	FLANGED SUPPORT	SUPPORT EMBOUTI	FLANSCHLAGER	
12	F01020512R	VITE M12X1,75X35 U5739 8.8ZN	SCR. M12X1,75X35 U5739 8.8ZN	VIS M12X1,75X35 5739 8.8 ZN	SCHR. M12X1,75X35 5739 8.8 ZN	TORN. M12X1,75X35 5739 8.8 ZN
13	B01329469R	DISTANZIALE 40X48X 7	SPACER	ENTRETOISE	DISTANZSTUECK 40X48X7	
14	B07S00957R	TIRANTE GALOPPINO	TIGHTENING BRACKET	TENDEUR	LEITROLLE ZUGSTANGE	
15	B01519319R	RALLA 16X38X5	FIFTH WHEEL	BUTEE	SCREIBE	
16	F01200306R	DADO M14X2 U5588 CL8 ZN	NUT M14X2 U5588 6.8ZN	ECROU M14X2	MUTTER M14X2	DADO M14X2
17	B07S00953R	BRACCIO TENDITORE SX	RIGHT TENSIONER ROD	BRAS TENDEUR GAUCHE	RECHTER SPANNARM	
18	B03400235R	INGRANAGGIO Z=11-1	GEAR Z=11-1	ENGRENAGE	ZAHNRAD Z=11-1	
19	B02042515R	CUSC 6205-2RS CAT.A-ST004	BEARING	ROULEMENT	LAGER 6205-2RS	
20	B03400274R	CORONA Z10-1 ISO F52 TRATT	SPROCKET Z=10-1	ENGRANAGE SPECIAL TRAITE	ZAHNKRANZ Z=10-1	
21	F01020510R	VITE M12X1,75X30 U5739 8.8ZN	SCR. M12X1,75X30 U5739 8.8ZN	VIS M12X1,75X30 U5739 8.8ZN	SCHRAU.M12X1,75X30 U5739 8.8ZN	TORN. M12X1,75X30 U5739 8.8ZN
22	B03400225R	INGR. Z=24 10; 1, 1; ISO 16B-1	SMOOTH ROLLER GEAR Z=24	ENGRENAGE ROULEAU LISSE	GLATT WALZE ZAHNRAD Z=24	
23	B03400274R	CORONA Z10-1 ISO F52 TRATT	SPROCKET Z=10-1	ENGRANAGE SPECIAL TRAITE	ZAHNKRANZ Z=10-1	
24	F02050101R	ANELLO E. DE 25X 1,2 U7435 C7	SEEGER RING E. 25X1,2 7435 C70	SEEGER E. 25X 1,2 U7435 C70	SEEGERING E. 25X 1,2 U7435 C70	ANILLO E. 25X 1,2 U7435 C70
25	B01300104R	SPES. 25,5 37 0,2	SHIM	ENTRETOISE	BEILAGSCHEIBE 25,5 37 0,2	
26	B030E1027R	CATENA RULLI ISO 16 B-1 27M	ROLLER CHAIN ISO16 B-1 27M	CHAINE ROULEAUX	WALZENKETTE	
27	B02042515R	CUSC 6205-2RS CAT.A-ST004	BEARING	ROULEMENT	LAGER 6205-2RS	
28	B07S00953R	BRACCIO TENDITORE SX	RIGHT TENSIONER ROD	BRAS TENDEUR GAUCHE	RECHTER SPANNARM	
29	B04210610R	INGRAS HYDR A 45 M 6X1	GREASE NIPPLE	GRAISSEUR HYDRAULIQUE	SCHMIERNIPPEL M6X1 45	
30	B0C003057R	COLLEGAMENTO TENDITORI	TIGHTENER CONNECTION	CONNEXION TENDEURS	SPANNERKUPPLUNG	
31	F01200306R	DADO M14X2 U5588 CL8 ZN	NUT M14X2 U5588 6.8ZN	ECROU M14X2	MUTTER M14X2	DADO M14X2
32	B01519319R	RALLA 16X38X5	FIFTH WHEEL	BUTEE	SCREIBE	
33	B01800046R	MOLLA 6 30 180C	SPRING	RESSORT	FEDER	
34	B01300157R	DISTANZIALE 16,6X21,3X165	SPACER	ENTRETOISE	ABSTANZSTUECK 16,6X21,3X165	
35	F01020510R	VITE M12X1,75X30 U5739 8.8ZN	SCR. M12X1,75X30 U5739 8.8ZN	VIS M12X1,75X30 U5739 8.8ZN	SCHRAU.M12X1,75X30 U5739 8.8ZN	TORN. M12X1,75X30 U5739 8.8ZN
36	B01519319R	RALLA 16X38X5	FIFTH WHEEL	BUTEE	SCREIBE	
37	F01200293R	DADO M12X1,75 U5588 CL8 ZN	NUT M12X1,75 U5588 6S ZN	ECROU M12X1,75 U5588 6S ZN	MUTTER M12X1,75 U5588 6S ZN	TUERCA M12X1,75 U5588 6S ZN
38	B07S00957R	TIRANTE GALOPPINO	TIGHTENING BRACKET	TENDEUR	LEITROLLE ZUGSTANGE	
39	F01020510R	VITE M12X1,75X30 U5739 8.8ZN	SCR. M12X1,75X30 U5739 8.8ZN	VIS M12X1,75X30 U5739 8.8ZN	SCHRAU.M12X1,75X30 U5739 8.8ZN	TORN. M12X1,75X30 U5739 8.8ZN
40	F01020508R	VITE M12X1,75X25 U5739 8.8ZN	SCR. M12X1,75X25 U5739 8.8ZN	VIS M12X1,75X25 U5739 8.8 ZN	SCHRAUBE M12X1,75X25U57398.8ZN	TORNIL.M12X1,75X25 U5739 8.8ZN
41	F02050101R	ANELLO E. DE 25X 1,2 U7435 C7	SEEGER RING E. 25X1,2 7435 C70	SEEGER E. 25X 1,2 U7435 C70	SEEGERING E. 25X 1,2 U7435 C70	ANILLO E. 25X 1,2 U7435 C70
42	F04010170R	CUSC.D25 D52 B15 6205 2RS EX	BEARING D25 D52 B15 6205 2RS	ROULEMENT 6205 2RS	LAGER 6205 2RS	COJINETE 6205 2RS
43	B07S00958R	TIRANTE FISSO	TIE ROD	TIRANT FIXE	ZUGSTANGE	
44	B00191250R	VITE M12X1,75X 50 U5737 8.8ZN	SCREW	VIS	SCHRAUBE	
45	F01200421R	DADO M12X1,75 U5589 CL8 ZN6SZN	NUT M12X1,75 U5589 6SZN	ECROU M12	MUTTER M12	DADO M12
46	F01230202R	DADO M10X 1,5 D985 8 ZN	NUT M10 D985	ECROU AUTOBL. M10	SELBSTSPERR.MUTTER M10	DADO AUTOBL. M10
47	F01410062R	ROS.M10 10,5X 18X 2 U6592 ZN	WASHER M10 10,5X 18X 2 U6592	RONDELLE M10 10,5X18X2 ZN	DICHTUNGSRING M10 10,5X18X2 ZN	RONDANA M10 10,5X18X2 ZN
48	B00920208R	DADO M8X1 D985 8ZN	NUT M8X1 D985 8ZN	ECROU	SELBSTSICHERNDE MUTTER M8-5S	
49	F01410051R	ROS.M8 8,4X 17X1,6 U6592 ZN	WASHER M8 8,4X17X1,6 U6592 ZN	RONDELLE M8 8,4X17X1,6 ZN	SCHEIBE M8 8,4X17X1,6 U6592 ZN	ARANDELA M8 8,4X17X1,6 U6592ZN
50	F01200306R	DADO M14X2 U5588 CL8 ZN	NUT M14X2 U5588 6.8ZN	ECROU M14X2	MUTTER M14X2	DADO M14X2
51	B07S00957R	TIRANTE GALOPPINO	TIGHTENING BRACKET	TENDEUR	LEITROLLE ZUGSTANGE	
52	F01020510R	VITE M12X1,75X30 U5739 8.8ZN	SCR. M12X1,75X30 U5739 8.8ZN	VIS M12X1,75X30 U5739 8.8ZN	SCHRAU.M12X1,75X30 U5739 8.8ZN	TORN. M12X1,75X30 U5739 8.8ZN
53	B07S00953R	BRACCIO TENDITORE SX	RIGHT TENSIONER ROD	BRAS TENDEUR GAUCHE	RECHTER SPANNARM	
54	F04010170R	CUSC.D25 D52 B15 6205 2RS EX	BEARING D25 D52 B15 6205 2RS	ROULEMENT 6205 2RS	LAGER 6205 2RS	COJINETE 6205 2RS
55	B014R3050R	ROSETTA 30 UNI 5714-69 E DEIDR	WASHER	RONDELLE	BEILAGSSCHEIBE	
56	F01230291R	DADO M30X2 D985 ZN	NUT M30X2 D985 ZN	ECROU AUTOB. M30X2 DIN 985 ZN	SELBSTSP. MU. M30X2 DIN 985 ZN	TUERCA AUTOB. M30X2 DIN 985 ZN
57	B04210610R	INGRAS HYDR A 45 M 6X1	GREASE NIPPLE	GRAISSEUR HYDRAULIQUE	SCHMIERNIPPEL M6X1 45	
58	F02050101R	ANELLO E. DE 25X 1,2 U7435 C7	SEEGER RING E. 25X1,2 7435 C70	SEEGER E. 25X 1,2 U7435 C70	SEEGERING E. 25X 1,2 U7435 C70	ANILLO E. 25X 1,2 U7435 C70

TAV_070

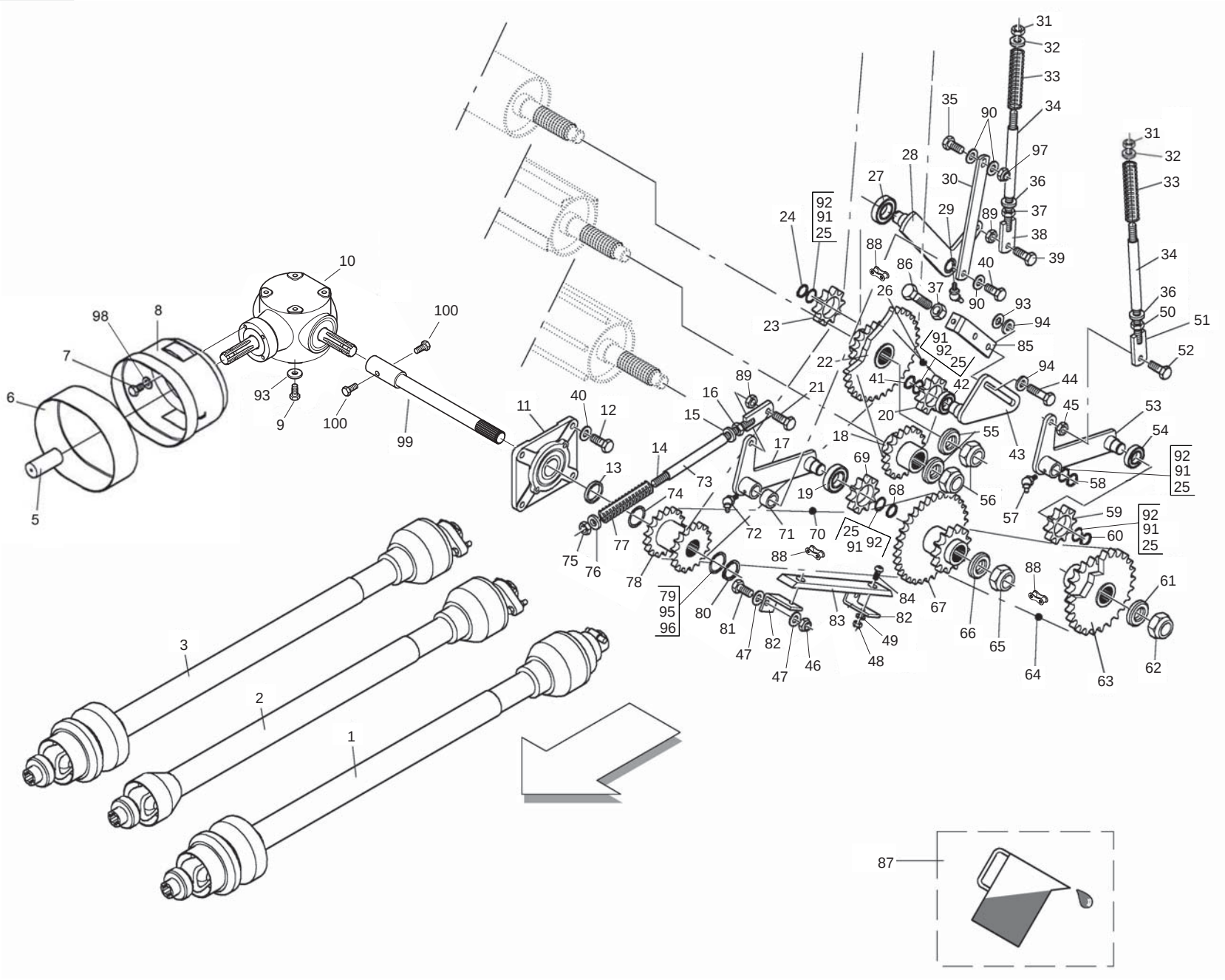

MASCHIO

cod. F07022343

TRASMISSIONE
TRANSMISSION

Pos.	Cod.	Descrizione	Description	Description	Benennung	Descripcion
59	B03400274R	CORONA Z10-1 ISO F52 TRATT	SPROCKET Z=10-1	ENGRANAGE SPECIAL TRAITE	ZAHNKRANZ Z=10-1	
60	F02050101R	ANELLO E. DE 25X 1,2 U7435 C7	SEEGER RING E. 25X1,2 7435 C70	SEEGER E. 25X 1,2 U7435 C70	SEEGERING E. 25X 1,2 U7435 C70	ANILLO E. 25X 1,2 U7435 C70
61	B014R3050R	ROSETTA 30 UNI 5714-69 E DEIDR	WASHER	RONDELLE	BEILAGSSCHEIBE	
62	F01230291R	DADO M30X2 D985 ZN	NUT M30X2 D985 ZN	ECROU AUTOB. M30X2 DIN 985 ZN	SELBSTSP. MU. M30X2 DIN 985 ZN	TUERCA AUTOB. M30X2 DIN 985 ZN
63	B03400285R	INGR. Z=17 24; 1, 1; ISO 16B-1	BIG ROLLER GEAR Z=17-24 1	ENGRANAGE	ZAHNRAD	
64	B030E1056R	CATENA RULLI ISO 16 B-1 56M	ROLLER CHAIN ISO16 B-1 56M	CHAINE ROULEAUX	WALZENKETTE	
65	F01230291R	DADO M30X2 D985 ZN	NUT M30X2 D985 ZN	ECROU AUTOB. M30X2 DIN 985 ZN	SELBSTSP. MU. M30X2 DIN 985 ZN	TUERCA AUTOB. M30X2 DIN 985 ZN
66	B014R3050R	ROSETTA 30 UNI 5714-69 E DEIDR	WASHER	RONDELLE	BEILAGSSCHEIBE	
67	B03400230R	INGR.RULLO BACC.INF.Z=24-12 1	ROD ROLLER GEAR Z=24-12 1	ENGRENAGE	WALZE ZAHNRAD Z=24-12 1	
68	F02050101R	ANELLO E. DE 25X 1,2 U7435 C7	SEEGER RING E. 25X1,2 7435 C70	SEEGER E. 25X 1,2 U7435 C70	SEEGERING E. 25X 1,2 U7435 C70	ANILLO E. 25X 1,2 U7435 C70
69	B03400274R	CORONA Z10-1 ISO F52 TRATT	SPROCKET Z=10-1	ENGRANAGE SPECIAL TRAITE	ZAHNKRANZ Z=10-1	
70	B030E1079R	CATENA RULLI ISO 16 B-1 79M	ROLLER CHAIN ISO16 B-1 79M	CHAINE ROULEAUX	WALZENKETTE	
71	B01334680R	DISTANZIALE 25 X 33 X 22	SPACER	ENTRETOISE	DISTANZSTUECK 25X33X22	
72	B04210610R	INGRAS HYDR A 45 M 6X1	GREASE NIPPLE	GRAISSEUR HYDRAULIQUE	SCHMIERNIPPEL M6X1 45	
73	B01300157R	DISTANZIALE 16,6X21,3X165	SPACER	ENTRETOISE	ABSTANZSTUECK 16,6X21,3X165	
74	B01300125R	SPES. 40 48 0,5 ZINCATO	SHIM GALV	ENTRETOISE GALV	DISTANZSTUECK 40 48 0,5	
75	F01200306R	DADO M14X2 U5588 CL8 ZN	NUT M14X2 U5588 6.8ZN	ECROU M14X2	MUTTER M14X2	DADO M14X2
76	B01519319R	RALLA 16X38X5	FIFTH WHEEL	BUTEE	SCREIBE	
77	B01800046R	MOLLA 6 30 180C	SPRING	RESSORT	FEDER	
78	B03400224R	INGR.DOPPIO Z=12 12-1 SCATOLA	DOUBLE GEAR Z=12 12-1	ENGRENAGE DOUBLE	DOPPEL ZAHNRAD Z=12 12-1	
79	B01300151R	SPES. 40 48 2 ZINCATO	SHIM	ENTRETOISE	DISTANZSTUECK 40 48 2	
80	B01700040R	ANEL. D ARR. ALBERO 40-E UNI 3	SEEGER RING	BAGUE SEEGER	SEEGERRING 40-E	
81	F01020472R	VITE M10X1,5X25 U5739 8.8ZN	SCR. M10X1,5X25 U5739 8.8ZN	VIS M10X1,5X25 U5739 8.8 ZN	SCHRAUBE M10X1,5X25 U5739 8.8	TORNILLO 10X25 U5739 8.8 ZN
82	B0C000037R	ATTACCO SLITTA NYLON	NYLON RAM COUPLING	ATTELAGE GLISSIERE EN NYLON	ANSCLHUSS	
83	B07631842R	GUIDA CATENA	CHAIN GUIDE	GUIDE	KETTENFUEHRUNG	
84	F01030208R	VITE M 8X1,25X 20 U7380 10.9ZN	SCREW M8X1,25X20 U7380 10.9ZN			
85	B0C003605R	TIRANTE INFALDATORE	FEEDER CONNECTING ROD	TIRANT AMENEUR	RAFFER ZUGSTANGE	
86	F01020517R	VITE M12X1,75X50 U5739 8.8ZN	SCR. M12X1,75X50 U5739 8.8ZN	VIS M12X1,75X50 5739 8.8 ZN	SCHRA. M12X1,75X50 5739 8.8 ZN	TORN. M12X1,75X50 5739 8.8 ZN
87	F03260016R	OLIO AGIP BLASIA 150	OIL AGIP BLASIA 150			
88	B030E0017R	GIUNTO MOLL N26 ISO 16 B-1	SPRING JOINT N.26 ISO 16 B-1	JOINT RESSORT	KETTENFEDER	
89	F01200421R	DADO M12X1,75 U5589 CL8 ZN6SZN	NUT M12X1,75 U5589 6SZN	ECROU M12	MUTTER M12	DADO M12
90	F01410076R	ROS.M12 13X 24X2,5 U6592 ZN	WASHER 12 13X 24X2,5 U6592 ZN	RONDEL. M12 13X24X2,5 U6592 ZN	SCHEIBE M12 13X24X2,5 U6592 ZN	ARANDELA M12 13 X24X2,5 ZN
91	B01300104R	SPES. 25,5 37 0,2	SHIM	ENTRETOISE	BEILAGSCHEIBE 25,5 37 0,2	
92	B01300105R	SPES. 25,5 37 0,5	SHIM	ENTRETOISE	DISTANZSTUECK 25,5 37 0,5	
93	B01516038R	RALLA 13 32 5	FIFTH WHEEL	BUTEE	SCHEIBE	
94	F01420120R	ROS.M12 13X36X2,5 U6593 ZN	WASHER M12 13X36X2,5 U6593 ZN	RONDELLE M12 13X36X2,5 ZN		
95	B01300125R	SPES. 40 48 0,5 ZINCATO	SHIM GALV	ENTRETOISE GALV	DISTANZSTUECK 40 48 0,5	
96	B01300126R	SPES. 40 48 1 ZINC.ST_013	SHIM	ENTRETOISE	DISTANZSTUECK 40 408 1	
97	F01230213R	DADO M12X1,75 U7474 CL8 ZN	NUT M12X1,75 U7474 6SZN	ECROU AUTOBL. M12	SELBSTSPERR.MUTTER M12	DADO AUTOBL. M12
98	F01410062R	ROS.M10 10,5X 18X 2 U6592 ZN	WASHER M10 10,5X 18X 2 U6592	RONDELLE M10 10,5X18X2 ZN	DICHTUNGSRING M10 10,5X18X2 ZN	RONDANA M10 10,5X18X2 ZN
99	B0R000304R	ALBERO PROLUNGA L=602	EXTENSION SHAFT L=602	ARBRE RALLONGE L=602	VERLAENGERUNGSWELLE L=602	
100	F01020040R	VITE M6X1X40 U5737 8.8ZN	SCR. M6X1X40 U5737 8.8ZN	VIS M6X1X40 U5737 8.8ZN	SCHRAU. M6X1X40 U5737 8.8ZN	TORNI. M6X1X40 U5737 8.8ZN

TAV_080

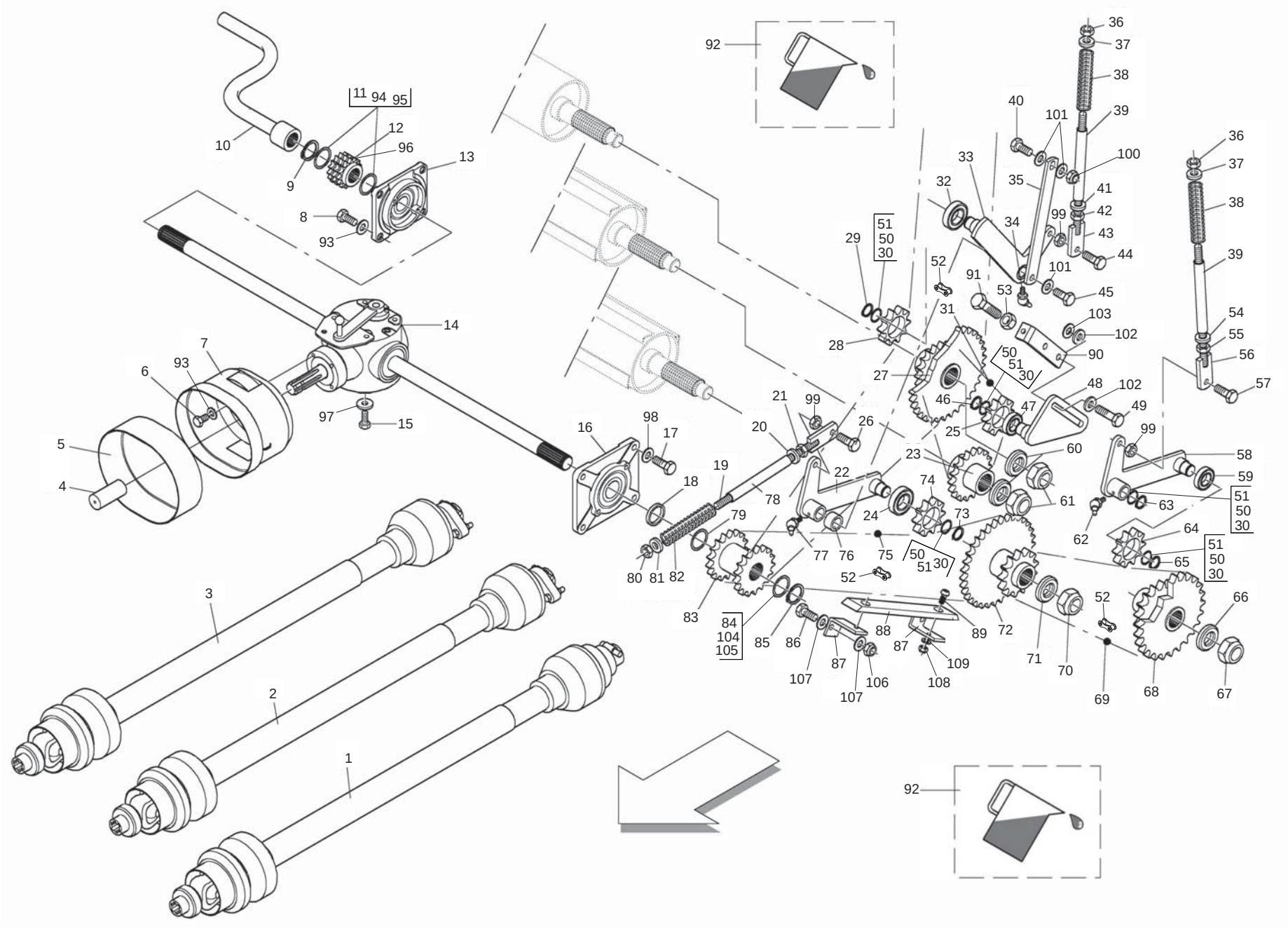

MASCHIO

cod. F07022343

TRASMISSIONE CUT
CUT TRANSMISSION

TAV_080

Pos.	Cod.	Descrizione	Description	Description	Benennung	Descripcion
1	B03600092R	CAR BO7 Z6-Z6 OMCAM 2500 L1589	PTO BO7 Z6-Z6 OMCAM 2500 L1589	CARDAN	TRAKTOR KARDAN BYPY656	
2	B03600120R	CAR BO4 Z6-Z6 OMFRZ 1350 L1577	PTO BO4 Z6-Z6 OMFRZ 1350 L1577	CARDAN	GELENKWELLE T.BYPY654 OC F	
3	B03600076R	CAR BO7 Z6-Z6 OMFRZ 1700 L1546	PTO BO7 Z6-Z6 OMFRZ 1700 L1546	CARDAN	GELENKWELLE	
4	G19002131R	PROTEZIONE P.D.P.	PDP GUARD			
5	B07V00044R	PROLUNGA PER CUFFIA OVALE	COVER EXTENTION	RALLONGE POUR BOL	VERLAENGERUNG FUER SCHUTZHAUBE	
6	F01020472R	VITE M10X1,5X25 U5739 8.8ZN	SCR. M10X1,5X25 U5739 8.8ZN	VIS M10X1,5X25 U5739 8.8 ZN	SCHRAUBE M10X1,5X25 U5739 8.8	TORNILLO 10X25 U5739 8.8 ZN
7	B07V00059R	PROT. CARDANO FFPRO	COVER PROTECTION	PROTECTION CARDAN	ZAPFWELLENSCHUTZHAUBE FFPRO	
8	F01020512R	VITE M12X1,75X35 U5739 8.8ZN	SCR. M12X1,75X35 U5739 8.8ZN	VIS M12X1,75X35 5739 8.8 ZN	SCHR. M12X1,75X35 5739 8.8 ZN	TORN. M12X1,75X35 5739 8.8 ZN
9	B01700040R	ANEL. D ARR. ALBERO 40-E UNI 3	SEEGER RING	BAGUE SEEGER	SEEGERRING 40-E	
10	B07S00869R	MANOVELLA SGOLFAMENTO	OVERLOAD CRANCK	MANIVELLE	KURBEL ZUR ENTSTOPFUNG	
11	B01300355R	DISTANZIALE 40X54X20	SPACER	ENTRETOISE	ABSTANDSTUECK 40X54X20	
12	B03400072R	INGR.TRIPLO Z=13-3 4 X7 16	TRIPLE GEAR Z=13-3 4 X7 16	ENGRENAGE TRIPLE	DREIFACH ZAHNRAD Z=13-3 4 X7 1	
13	B02700051R	SUPPORTO FLANGIATO	FLANGED SUPPORT	SUPPORT EMBOUTI	FLANSCHLAGER	
14	B03900179R	SCAT.BP 2070-1 1-RL-DIS S.ALB.	GEAR BOX	BOITE	GETRIEBE BYPY 2070	
15	F01020540R	VITE M14X2X30 U5739 8.8ZN	SCR. M14X2X30 U5739 8.8ZN	VIS M14X2X30 U5739 8.8ZN	SCHRAUBE M14X2X30 U5739 8.8ZN	TORNILLO M14X2X30 U5739 8.8ZN
16	B02700051R	SUPPORTO FLANGIATO	FLANGED SUPPORT	SUPPORT EMBOUTI	FLANSCHLAGER	
17	F01020510R	VITE M12X1,75X30 U5739 8.8ZN	SCR. M12X1,75X30 U5739 8.8ZN	VIS M12X1,75X30 U5739 8.8ZN	SCHRAU.M12X1,75X30 U5739 8.8ZN	TORN. M12X1,75X30 U5739 8.8ZN
18	B01329469R	DISTANZIALE 40X48X 7	SPACER	ENTRETOISE	DISTANZSTUECK 40X48X7	
19	B07S00957R	TIRANTE GALOPPINO	TIGHTENING BRACKET	TENDEUR	LEITROLLE ZUGSTANGE	
20	B01519319R	RALLA 16X38X5	FIFTH WHEEL	BUTEE	SCREIBE	
21	F01200306R	DADO M14X2 U5588 CL8 ZN	NUT M14X2 U5588 6.8ZN	ECROU M14X2	MUTTER M14X2	DADO M14X2
22	B07S00953R	BRACCIO TENDITORE SX	RIGHT TENSIONER ROD	BRAS TENDEUR GAUCHE	RECHTER SPANNARM	
23	B03400235R	INGRANAGGIO Z=11-1	GEAR Z=11-1	ENGRENAGE	ZAHNRAD Z=11-1	
24	F04010170R	CUSC.D25 D52 B15 6205 2RS EX	BEARING D25 D52 B15 6205 2RS	ROULEMENT 6205 2RS	LAGER 6205 2RS	COJINETE 6205 2RS
25	B03400274R	CORONA Z10-1 ISO F52 TRATT	SPROCKET Z=10-1	ENGRANAGE SPECIAL TRAITE	ZAHNKRANZ Z=10-1	
26	F01020510R	VITE M12X1,75X30 U5739 8.8ZN	SCR. M12X1,75X30 U5739 8.8ZN	VIS M12X1,75X30 U5739 8.8ZN	SCHRAU.M12X1,75X30 U5739 8.8ZN	TORN. M12X1,75X30 U5739 8.8ZN
27	B03400225R	INGR. Z=24 10; 1, 1; ISO 16B-1	SMOOTH ROLLER GEAR Z=24	ENGRENAGE ROULEAU LISSE	GLATT WALZE ZAHNRAD Z=24	
28	B03400274R	CORONA Z10-1 ISO F52 TRATT	SPROCKET Z=10-1	ENGRANAGE SPECIAL TRAITE	ZAHNKRANZ Z=10-1	
29	F02050101R	ANELLO E. DE 25X 1,2 U7435 C7	SEEGER RING E. 25X1,2 7435 C70	SEEGER E. 25X 1,2 U7435 C70	SEEGERING E. 25X 1,2 U7435 C70	ANILLO E. 25X 1,2 U7435 C70
30	B01300104R	SPES. 25,5 37 0,2	SHIM	ENTRETOISE	BEILAGSCHEIBE 25,5 37 0,2	
31	B030E1027R	CATENA RULLI ISO 16 B-1 27M	ROLLER CHAIN ISO16 B-1 27M	CHAINE ROULEAUX	WALZENKETTE	
32	F04010170R	CUSC.D25 D52 B15 6205 2RS EX	BEARING D25 D52 B15 6205 2RS	ROULEMENT 6205 2RS	LAGER 6205 2RS	COJINETE 6205 2RS
33	B07S00953R	BRACCIO TENDITORE SX	RIGHT TENSIONER ROD	BRAS TENDEUR GAUCHE	RECHTER SPANNARM	
34	B04210610R	INGRAS HYDR A 45 M 6X1	GREASE NIPPLE	GRAISSEUR HYDRAULIQUE	SCHMIERNIPPEL M6X1 45	
35	B0C003057R	COLLEGAMENTO TENDITORI	TIGHTENER CONNECTION	CONNEXION TENDEURS	SPANNERKUPPLUNG	
36	F01200306R	DADO M14X2 U5588 CL8 ZN	NUT M14X2 U5588 6.8ZN	ECROU M14X2	MUTTER M14X2	DADO M14X2
37	B01519319R	RALLA 16X38X5	FIFTH WHEEL	BUTEE	SCREIBE	
38	B01800046R	MOLLA 6 30 180C	SPRING	RESSORT	FEDER	
39	B01300157R	DISTANZIALE 16,6X21,3X165	SPACER	ENTRETOISE	ABSTANZSTUECK 16,6X21,3X165	
40	F01020510R	VITE M12X1,75X30 U5739 8.8ZN	SCR. M12X1,75X30 U5739 8.8ZN	VIS M12X1,75X30 U5739 8.8ZN	SCHRAU.M12X1,75X30 U5739 8.8ZN	TORN. M12X1,75X30 U5739 8.8ZN
41	B01519319R	RALLA 16X38X5	FIFTH WHEEL	BUTEE	SCREIBE	
42	F01200293R	DADO M12X1,75 U5588 CL8 ZN	NUT M12X1,75 U5588 6S ZN	ECROU M12X1,75 U5588 6S ZN	MUTTER M12X1,75 U5588 6S ZN	TUERCA M12X1,75 U5588 6S ZN
43	B07S00957R	TIRANTE GALOPPINO	TIGHTENING BRACKET	TENDEUR	LEITROLLE ZUGSTANGE	
44	F01020510R	VITE M12X1,75X30 U5739 8.8ZN	SCR. M12X1,75X30 U5739 8.8ZN	VIS M12X1,75X30 U5739 8.8ZN	SCHRAU.M12X1,75X30 U5739 8.8ZN	TORN. M12X1,75X30 U5739 8.8ZN
45	F01020508R	VITE M12X1,75X25 U5739 8.8ZN	SCR. M12X1,75X25 U5739 8.8ZN	VIS M12X1,75X25 U5739 8.8 ZN	SCHRAUBE M12X1,75X25U57398.8ZN	TORNIL.M12X1,75X25 U5739 8.8ZN
46	F02050101R	ANELLO E. DE 25X 1,2 U7435 C7	SEEGER RING E. 25X1,2 7435 C70	SEEGER E. 25X 1,2 U7435 C70	SEEGERING E. 25X 1,2 U7435 C70	ANILLO E. 25X 1,2 U7435 C70
47	F04010170R	CUSC.D25 D52 B15 6205 2RS EX	BEARING D25 D52 B15 6205 2RS	ROULEMENT 6205 2RS	LAGER 6205 2RS	COJINETE 6205 2RS
48	B07S00958R	TIRANTE FISSO	TIE ROD	TIRANT FIXE	ZUGSTANGE	
49	B00191250R	VITE M12X1,75X 50 U5737 8.8ZN	SCREW	VIS	SCHRAUBE	
50	B01300104R	SPES. 25,5 37 0,2	SHIM	ENTRETOISE	BEILAGSCHEIBE 25,5 37 0,2	
51	B01300105R	SPES. 25,5 37 0,5	SHIM	ENTRETOISE	DISTANZSTUECK 25,5 37 0,5	
52	B030E0017R	GIUNTO MOLL N26 ISO 16 B-1	SPRING JOINT N.26 ISO 16 B-1	JOINT RESSORT	KETTENFEDER	
53	F01200293R	DADO M12X1,75 U5588 CL8 ZN	NUT M12X1,75 U5588 6S ZN	ECROU M12X1,75 U5588 6S ZN	MUTTER M12X1,75 U5588 6S ZN	TUERCA M12X1,75 U5588 6S ZN
54	B01519319R	RALLA 16X38X5	FIFTH WHEEL	BUTEE	SCREIBE	
55	F01200306R	DADO M14X2 U5588 CL8 ZN	NUT M14X2 U5588 6.8ZN	ECROU M14X2	MUTTER M14X2	DADO M14X2
56	B07S00957R	TIRANTE GALOPPINO	TIGHTENING BRACKET	TENDEUR	LEITROLLE ZUGSTANGE	
57	F01020510R	VITE M12X1,75X30 U5739 8.8ZN	SCR. M12X1,75X30 U5739 8.8ZN	VIS M12X1,75X30 U5739 8.8ZN	SCHRAU.M12X1,75X30 U5739 8.8ZN	TORN. M12X1,75X30 U5739 8.8ZN

TAV_080

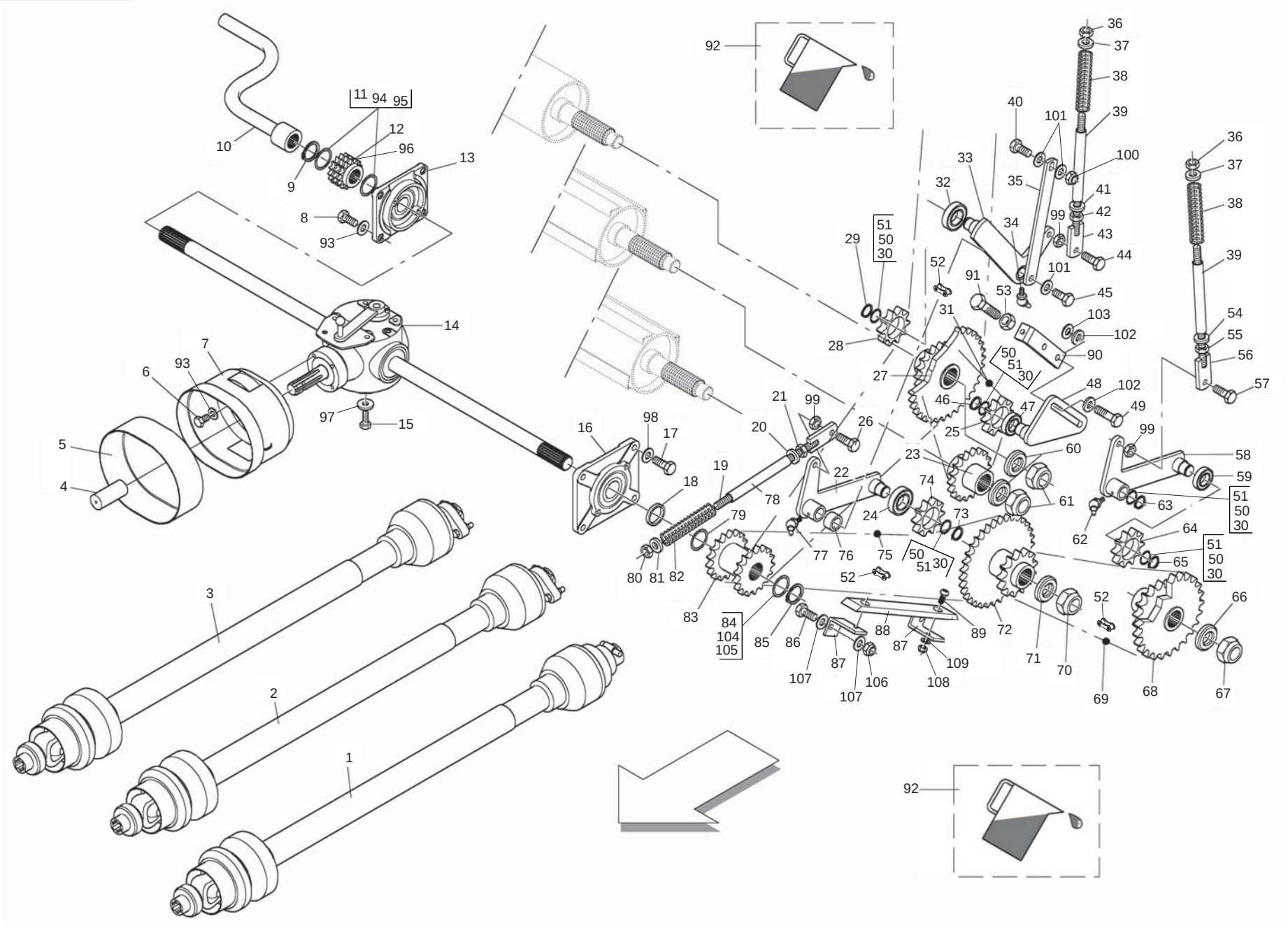

MASCHIO

cod. F07022343

TRASMISSIONE CUT
CUT TRANSMISSION

TAV_080

Pos.	Cod.	Descrizione	Description	Description	Benennung	Descripcion
58	B07S00953R	BRACCIO TENDITORE SX	RIGHT TENSIONER ROD	BRAS TENDEUR GAUCHE	RECHTER SPANNARM	
59	F04010170R	CUSC.D25 D52 B15 6205 2RS EX	BEARING D25 D52 B15 6205 2RS	ROULEMENT 6205 2RS	LAGER 6205 2RS	COJINETE 6205 2RS
60	B014R3050R	ROSETTA 30 UNI 5714-69 E DEIDR	WASHER	RONDELLE	BEILAGSSCHEIBE	
61	F01230291R	DADO M30X2 D985 ZN	NUT M30X2 D985 ZN	ECROU AUTOB. M30X2 DIN 985 ZN	SELBSTSP. MU. M30X2 DIN 985 ZN	TUERCA AUTOB. M30X2 DIN 985 ZN
62	B04210610R	INGRAS HYDR A 45 M 6X1	GREASE NIPPLE	GRAISSEUR HYDRAULIQUE	SCHMIERNIPPEL M6X1 45	
63	F02050101R	ANELLO E. DE 25X 1,2 U7435 C7	SEEGER RING E. 25X1,2 7435 C70	SEEGER E. 25X 1,2 U7435 C70	SEEGERING E. 25X 1,2 U7435 C70	ANILLO E. 25X 1,2 U7435 C70
64	B03400274R	CORONA Z10-1 ISO F52 TRATT	SPROCKET Z=10-1	ENGRANAGE SPECIAL TRAITE	ZAHNKRANZ Z=10-1	
65	F02050101R	ANELLO E. DE 25X 1,2 U7435 C7	SEEGER RING E. 25X1,2 7435 C70	SEEGER E. 25X 1,2 U7435 C70	SEEGERING E. 25X 1,2 U7435 C70	ANILLO E. 25X 1,2 U7435 C70
66	B014R3050R	ROSETTA 30 UNI 5714-69 E DEIDR	WASHER	RONDELLE	BEILAGSSCHEIBE	
67	F01230291R	DADO M30X2 D985 ZN	NUT M30X2 D985 ZN	ECROU AUTOB. M30X2 DIN 985 ZN	SELBSTSP. MU. M30X2 DIN 985 ZN	TUERCA AUTOB. M30X2 DIN 985 ZN
68	B03400285R	INGR. Z=17 24; 1, 1; ISO 16B-1	BIG ROLLER GEAR Z=17-24 1	ENGRANAGE	ZAHNRAD	
69	B030E1056R	CATENA RULLI ISO 16 B-1 56M	ROLLER CHAIN ISO16 B-1 56M	CHAINE ROULEAUX	WALZENKETTE	
70	F01230291R	DADO M30X2 D985 ZN	NUT M30X2 D985 ZN	ECROU AUTOB. M30X2 DIN 985 ZN	SELBSTSP. MU. M30X2 DIN 985 ZN	TUERCA AUTOB. M30X2 DIN 985 ZN
71	B014R3050R	ROSETTA 30 UNI 5714-69 E DEIDR	WASHER	RONDELLE	BEILAGSSCHEIBE	
72	B03400230R	INGR.RULLO BACC.INF.Z=24-12 1	ROD ROLLER GEAR Z=24-12 1	ENGRENAGE	WALZE ZAHNRAD Z=24-12 1	
73	F02050101R	ANELLO E. DE 25X 1,2 U7435 C7	SEEGER RING E. 25X1,2 7435 C70	SEEGER E. 25X 1,2 U7435 C70	SEEGERING E. 25X 1,2 U7435 C70	ANILLO E. 25X 1,2 U7435 C70
74	B03400274R	CORONA Z10-1 ISO F52 TRATT	SPROCKET Z=10-1	ENGRANAGE SPECIAL TRAITE	ZAHNKRANZ Z=10-1	
75	B030E1079R	CATENA RULLI ISO 16 B-1 79M	ROLLER CHAIN ISO16 B-1 79M	CHAINE ROULEAUX	WALZENKETTE	
76	B01334680R	DISTANZIALE 25 X 33 X 22	SPACER	ENTRETOISE	DISTANZSTUECK 25X33X22	
77	B04210610R	INGRAS HYDR A 45 M 6X1	GREASE NIPPLE	GRAISSEUR HYDRAULIQUE	SCHMIERNIPPEL M6X1 45	
78	B01300157R	DISTANZIALE 16,6X21,3X165	SPACER	ENTRETOISE	ABSTANZSTUECK 16,6X21,3X165	
79	B01300125R	SPES. 40 48 0,5 ZINCATO	SHIM GALV	ENTRETOISE GALV	DISTANZSTUECK 40 48 0,5	
80	F01200306R	DADO M14X2 U5588 CL8 ZN	NUT M14X2 U5588 6.8ZN	ECROU M14X2	MUTTER M14X2	DADO M14X2
81	B01519319R	RALLA 16X38X5	FIFTH WHEEL	BUTEE	SCREIBE	
82	B01800046R	MOLLA 6 30 180C	SPRING	RESSORT	FEDER	
83	B03400224R	INGR.DOPPIO Z=12 12-1 SCATOLA	DOUBLE GEAR Z=12 12-1	ENGRENAGE DOUBLE	DOPPEL ZAHNRAD Z=12 12-1	
84	B01300151R	SPES. 40 48 2 ZINCATO	SHIM	ENTRETOISE	DISTANZSTUECK 40 48 2	
85	B01700040R	ANEL. D ARR. ALBERO 40-E UNI 3	SEEGER RING	BAGUE SEEGER	SEEGERRING 40-E	
86	F01020472R	VITE M10X1,5X25 U5739 8.8ZN	SCR. M10X1,5X25 U5739 8.8ZN	VIS M10X1,5X25 U5739 8.8 ZN	SCHRAUBE M10X1,5X25 U5739 8.8	TORNILLO 10X25 U5739 8.8 ZN
87	B0C000037R	ATTACCO SLITTA NYLON	NYLON RAM COUPLING	ATTELAGE GLISSIERE EN NYLON	ANSCLHUSS	
88	B07631842R	GUIDA CATENA	CHAIN GUIDE	GUIDE	KETTENFUEHRUNG	
89	F01030208R	VITE M 8X1,25X 20 U7380 10.9ZN	SCREW M8X1,25X20 U7380 10.9ZN			
90	B0C003605R	TIRANTE INFALDATORE	FEEDER CONNECTING ROD	TIRANT AMENEUR	RAFFER ZUGSTANGE	
91	F01020517R	VITE M12X1,75X50 U5739 8.8ZN	SCR. M12X1,75X50 U5739 8.8ZN	VIS M12X1,75X50 5739 8.8 ZN	SCHRA. M12X1,75X50 5739 8.8 ZN	TORN. M12X1,75X50 5739 8.8 ZN
92	F03260016R	OLIO AGIP BLASIA 150	OIL AGIP BLASIA 150			
93	B01421230R	ROS.M12 13X 20X2,0 U1749 ZN	WASHER	RONDELLE	SCHEIBE	
94	B01300150R	SPES. 40 48 1,5 ZINCATO	SHIM GALV	ENTRETOISE GALV	DISTANZSTUECK 40 48 1,5	
95	B01300151R	SPES. 40 48 2 ZINCATO	SHIM	ENTRETOISE	DISTANZSTUECK 40 48 2	
96	B03400199R	INGR.TRIP.Z15 15 15-5 8 X3 8	TRIPLE GEAR Z=15 15 15 5 8 X	ENGRENAGE TRIPLE	TRIPLEZAHNRAD Z=15 15 15 5 8 X	
97	B01516040R	RALLA 15 42 6	FIFTH WHEEL	BUTEE	SCHEIBE	
98	B01421230R	ROS.M12 13X 20X2,0 U1749 ZN	WASHER	RONDELLE	SCHEIBE	
99	F01200421R	DADO M12X1,75 U5589 CL8 ZN6SZN	NUT M12X1,75 U5589 6SZN	ECROU M12	MUTTER M12	DADO M12
100	F01230213R	DADO M12X1,75 U7474 CL8 ZN	NUT M12X1,75 U7474 6SZN	ECROU AUTOBL. M12	SELBSTSPERR.MUTTER M12	DADO AUTOBL. M12
101	B01421230R	ROS.M12 13X 20X2,0 U1749 ZN	WASHER	RONDELLE	SCHEIBE	
102	F01420120R	ROS.M12 13X36X2,5 U6593 ZN	WASHER M12 13X36X2,5 U6593 ZN	RONDELLE M12 13X36X2,5 ZN		
103	B01516038R	RALLA 13 32 5	FIFTH WHEEL	BUTEE	SCHEIBE	
104	B01300125R	SPES. 40 48 0,5 ZINCATO	SHIM GALV	ENTRETOISE GALV	DISTANZSTUECK 40 48 0,5	
105	B01300126R	SPES. 40 48 1 ZINC.ST_013	SHIM	ENTRETOISE	DISTANZSTUECK 40 408 1	
106	F01230202R	DADO M10X 1,5 D985 8 ZN	NUT M10 D985	ECROU AUTOBL. M10	SELBSTSPERR.MUTTER M10	DADO AUTOBL. M10
107	F01410062R	ROS.M10 10,5X 18X 2 U6592 ZN	WASHER M10 10,5X 18X 2 U6592	RONDELLE M10 10,5X18X2 ZN	DICHTUNGSRING M10 10,5X18X2 ZN	RONDANA M10 10,5X18X2 ZN
108	B00920208R	DADO M8X1 D985 8ZN	NUT M8X1 D985 8ZN	ECROU	SELBSTSICHERNDE MUTTER M8-5S	
109	F01410051R	ROS.M8 8,4X 17X1,6 U6592 ZN	WASHER M8 8,4X17X1,6 U6592 ZN	RONDELLE M8 8,4X17X1,6 ZN	SCHEIBE M8 8,4X17X1,6 U6592 ZN	ARANDELA M8 8,4X17X1,6 U6592ZN

TAV_090

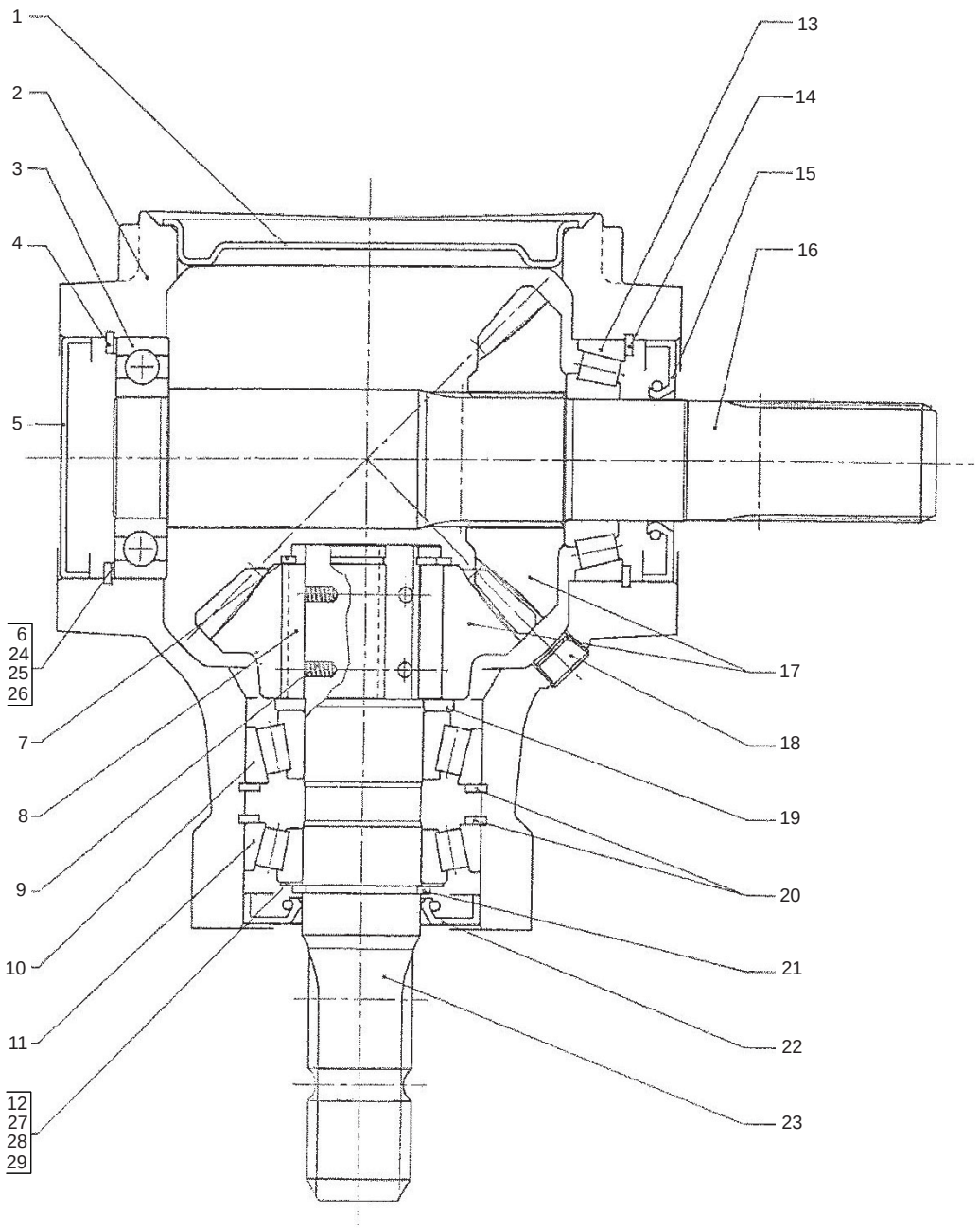

ESPLOSO SCATOLA DI TRASMISSIONE
GEARBOX PARTS

TAV_090

Pos.	Cod.	Descrizione	Description	Description	Benennung	Descripcion
1	B0R000255R	COPERCHIO SCATOLA D=130	BOX CAP	COUVERCLE BOITE D=130	GETRIEBEGEHAUSEDECKEL	
2	B0R000305R	CORPO SCATOLA 2050	BOX 2050			
3	B02004018R	CUSCINETTO 6208 CAT.A-ST004	BEARING	ROULEMENT 6208NCAT.A ST004	LAGER	
4	B0R000256R	ANELLO ELASTICO 80-I SP=2,5	ELASTIC RING 80-I SP=2,5	BAGUE RESSORT 80-I SP=2,5	ELASTISCHER RING	
5	B0R000090R	CAPPELLOTTO 80X10	SEAL 80X10	CAPOUCHON 80X10	KAPPE 80X10	
6	B0R000262R	ANELLO SPES. 69,3X79,7X0,2	SHIM RING 69,3X79,7X0,2	BAGUE EPAISSEUR 69,3X79,7X0,2	RING 69,3X79,7X0,2	
7	B0R000298R	ANELLO ELASTICO 50-E SP=2,0	RETAINING RING 50-E SP=2,0	BAGUE RESSORT 50-E SP=0,8	RING EL. 50-E	
8	B0R000307R	PIASTR. RL 29870	RL PLATE	PLAQUETTE RL	PLATTE RLL	
9	B0R000089R	MOLLA CONF DA 08 PZ	SPRING	RESSORT	FEDER	
10	B02124024R	CUSC. 32208 CAT.A-ST004	BEARING	ROULEMENT	LAGER	
11	B02124019R	CUSC. 30208 CAT.A-ST004	BEARING	ROULEMENT	LAGER	
12	B0R000259R	ANELLO SPES. 40,2X54,8X0,3	SHIM RING 40,2X54,8X0,3	BAGUE EPAISSEUR 40,2X54,8X0,3	ELASTISCHER RING	
13	B02124019R	CUSC. 30208 CAT.A-ST004	BEARING	ROULEMENT	LAGER	
14	B0R000256R	ANELLO ELASTICO 80-I SP=2,5	ELASTIC RING 80-I SP=2,5	BAGUE RESSORT 80-I SP=2,5	ELASTISCHER RING	
15	F03010277R	ANELLO T.AS 40X 80X10 D3760NBR	OIL SEAL 40X80X10 NBR	BOURAGE 40X80X10 NBR	OELABDICHTUNG 40X80X10 NBR	
16	B0R000975R	ALBERO SCAT.EXTREME HT	BOX SHAFT FOR EXTREME HT	ARBRE BOITE EXTREME HT	WELLE	
17	B0R000308R	COPPIA CONICA R=1 1	R=1 1 BEVEL GEAR PAIR	COUPLE CONIQUE R=1 1	ZAHNRADPAAR R=1 1	
18	B0R000175R	TAPPO 3 8 GAS-C DIN 906	PLUG	BOUCHON 3 8 GAS-C DIN 906	VERSCHLUSS DECKER 3 8 GAS-C	
19	B0R000285R	DISTANZIALE	SPACER	ENTRETOISE	DISTANZSTUECK	
20	B0R000256R	ANELLO ELASTICO 80-I SP=2,5	ELASTIC RING 80-I SP=2,5	BAGUE RESSORT 80-I SP=2,5	ELASTISCHER RING	
21	B0R000257R	ANELLO ELASTICO 40-E SP=2,5	ELASTIC RING 40-E SP=2,5	BAGUE RESSORT 40-E SP=2,5	ELASTISCHER RING	
22	F03010277R	ANELLO T.AS 40X 80X10 D3760NBR	OIL SEAL 40X80X10 NBR	BOURAGE 40X80X10 NBR	OELABDICHTUNG 40X80X10 NBR	
23	B0R000306R	ALBERO ASSE Z R.L.	AXLE SHAFT Z R.L.	ARBRE AXE Z RL	ACHSWELLE Z R.L.	
24	B0R000263R	ANELLO SPES. 69,3X79,7X0,3	SHIM RING 69,3X79,7X0,3	BAGUE EPAISSEUR 69,3X79,7X0,3	SCHEIBE 69,3X79,7X0,3	
25	B0R000264R	ANELLO SPES. 69,3X79,7X0,4	SHIM RING 69,3X79,7X0,4	BAGUE EPAISSEUR 69,3X79,7X0,4	DISTANZRING 69,3X79,7X0,4	
26	B0R000265R	ANEL SPES. 69,3X79,7X0,1 34006	SHIM RING 69,3X79,7X0,1 34006	BAGUE EPAISSEUR 69,3X79,7X0,1	RING 69,3X79,7X0,1	
27	B0R000260R	ANELLO SPES. 40,2X54,8X0,4	SHIM RING 40,2X54,8X0,4	BAGUE EPAISSEUR 40,2X54,8X0,4	DISTANZRING 40,2X54,8X0,4	
28	B0R000261R	ANELLO SPES. 40,2X54,8X0,1	SHIM RING 40,2X54,8X0,1	BAGUE EPAISSEUR 40,2X54,8X0,1	DISTANZRING 40,2X54,8X0,1	
29	B0R000258R	ANELLO SPES. 40,2X54,8X0,2	SHIM RING 40,2X54,8X0,2	BAGUE EPAISSEUR 40,2X54,8X0,2	ELASTISCHER RING	

TAV_100

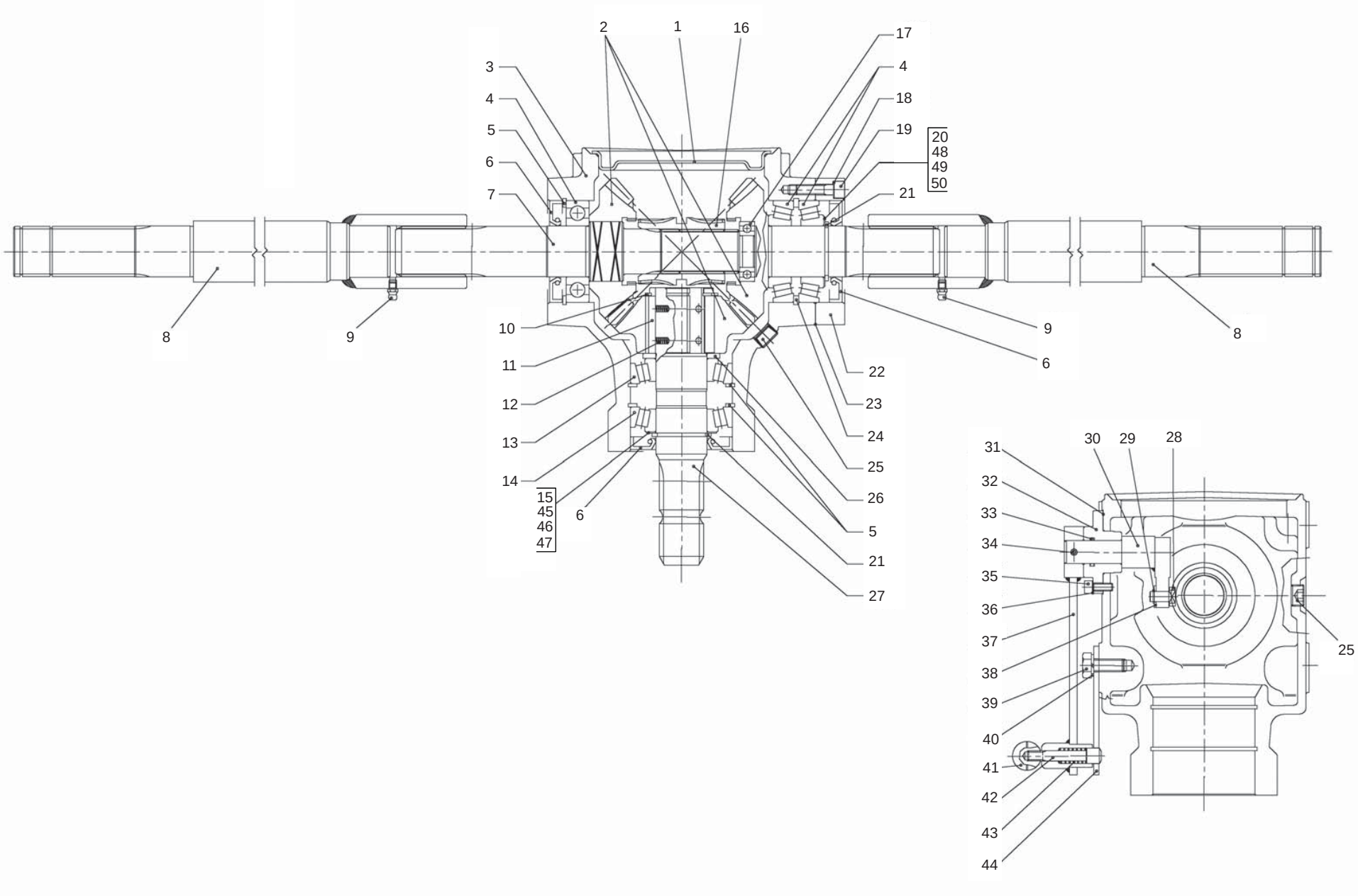
2
1
16
17
3
4
4
18
5
19
20
48
49
50
6
7
21
8
9
10
9
8
11
6
22
12
23
13
24
14
25
15
45
46
47
6
26
5
21
27
31
30
29
28
32
33
34
35
36
37
25
38
39
40
41
42
43
44

ESPLOSO SCATOLA DI TRASMISSIONE CUT
CUT GEARBOX PARTS

TAV_100

Pos.	Cod.	Descrizione	Description	Description	Benennung	Descripcion
1	B0R000288R	COPERCHIO D=145	COVER D=145	COUVERCLE D=145	DECKEL D=145	
2	B0R000303R	TERNA CONICA R=1.1	BEVEL GEAR TRIAL R=1.1	TERNE CONIQUE R=1,1	TRIPPELZAHNRAD R=1.1	
3	B0R000277R	SCATOLA 2070	BOX 2070			
4	B02124019R	CUSC. 30208 CAT.A-ST004	BEARING	ROULEMENT	LAGER	
5	B0R000256R	ANELLO ELASTICO 80-I SP=2,5	ELASTIC RING 80-I SP=2,5	BAGUE RESSORT 80-I SP=2,5	ELASTISCHER RING	
6	F03010277R	ANELLO T.AS 40X 80X10 D3760NBR	OIL SEAL 40X80X10 NBR	BOURAGE 40X80X10 NBR	OELABDICHTUNG 40X80X10 NBR	
7	B0R000279R	ALBERO ASSE XY	AXIS SHAFT	ARBRE AXE XY	ACHSWELLE	
8	B0R000304R	ALBERO PROLUNGA L=602	EXTENSION SHAFT L=602	ARBRE RALLONGE L=602	VERLAENGERUNGSWELLE L=602	
9	B04200610R	INGRASS.A SFERE M6X1 LUNGO	GREASE NIPPLE	GRAISSEUR HYDRAULIQUE	GERADER SCHMIERNIPPEL M6X1	
10	B0R000298R	ANELLO ELASTICO 50-E SP=2,0	RETAINING RING 50-E SP=2,0	BAGUE RESSORT 50-E SP=0,8	RING EL. 50-E	
11	B0R000289R	PIASTRINA RL	RL PLATE	PLAQUE RL	SCHEIBE RL	
12	B0R000089R	MOLLA CONF DA 08 PZ	SPRING	RESSORT	FEDER	
13	B02124024R	CUSC. 32208 CAT.A-ST004	BEARING	ROULEMENT	LAGER	
14	B02004018R	CUSCINETTO 6208 CAT.A-ST004	BEARING	ROULEMENT 6208NCAT.A ST004	LAGER	
15	B0R000258R	ANELLO SPES. 40,2X54,8X0,2	SHIM RING 40,2X54,8X0,2	BAGUE EPAISSEUR 40,2X54,8X0,2	ELASTISCHER RING	
16	B0R000276R	MANICOTTO PER DISINNESTO	COUPLING FOR DISENGAGEMENT	MANCHON POUR DECLENCHEMENT	HUELSE FUER AUSKUPPLUNG	
17	B02003013R	CUSCINETTO 6006 CAT.B-ST004	BEARING	ROULEMENT	LAGER	
18	B0R000296R	RONDELLA SICUR.D=8 SCHNORR	LOCK WASHER D=8 SCHNORR	RONDELLE SECURETE D=8 SCHNORR	BEILAGSSCHEIBE D=8	
19	F01040097R	VITE M8X1,25X30 U5931 8.8ZN	SCR. M8X1,25X30 U5931 8.8ZN			
20	B0R000258R	ANELLO SPES. 40,2X54,8X0,2	SHIM RING 40,2X54,8X0,2	BAGUE EPAISSEUR 40,2X54,8X0,2	ELASTISCHER RING	
21	B0R000257R	ANELLO ELASTICO 40-E SP=2,5	ELASTIC RING 40-E SP=2,5	BAGUE RESSORT 40-E SP=2,5	ELASTISCHER RING	
22	B0R000286R	DISTANZIALE PORTA ANELLO	RING-HOLDER SPACER	ENTRETOISE PORTE BAGUE	DISTANZSTUECK	
23	B0R000287R	GUARNIZIONE 80X115X0,3	PACKING 80X115X0,3	JOINT 80X115X0,3	DICHTUNG 80X115X0,3	
24	B0R000299R	ANELLO ELASTICO 80-I SP=4,0	RETAINING RING 80-I SP=4,0	BAGUE RESSORT 80-I SP=4,0	RING EL. 80-I	
25	B0R000175R	TAPPO 3 8 GAS-C DIN 906	PLUG	BOUCHON 3 8 GAS-C DIN 906	VERSCHLUSS DECKER 3 8 GAS-C	
26	B0R000285R	DISTANZIALE	SPACER	ENTRETOISE	DISTANZSTUECK	
27	B0R000278R	ALBERO ASSE Z R.L.	AXIS SHAFT	ARBRE AXE Z R.L.	ACHSWELLE	
28	B0R000290R	PATTINO	SLIDING BLOCK	CALE	SCHUH	
29	B0R000297R	ANELLO ELASTICO 8-E SP=0,8	RETAINING RING 8-E SP=0,8	BAGUE RESSORT 8-E SP=0,8	RING EL. 8-E	
30	B0R000282R	LEVA COM. DISINNESTO	LEVER RELEASE	LEVIER COM. DEBRAYAGE	AUSLOSERHEBEL	
31	B0R000284R	GUARNIZIONE 35X65X0,2	PACKING 35X65X0,2	JOINT 35X65X0,2	DICHTUNG 35X65X0,2	
32	B0R000283R	SUPP. LEVA	LEVER SUPPORT	SUPPORT LEVIER	HEBELTRAGER	
33	B0R000300R	ANELLO TORICO OR 123	OR RING 123	BAGUE TORIQUE OR 123	OR RING 123	
34	F02100090R	SPINA E.P. 5X 40 U6873 C70 BR	ELASTIC PIN 5X40	GOUJON ELASTIQUE 5X40	SPANNHUELSE 5X40	
35	B0R000292R	VITE TCEI M 6X 16-12.9	SCREW TCEI M 6X 16-12.9	VIS TCEI M 6X16-12.9	SCHRAUBE TCEI M6X16-12.9	
36	B0R000295R	RONDELLA SICUR.D=6 SCHNORR	LOCK WASHER D=6 SCHNORR	RONDELLE SECURETE D=6 SCHNORR	BEILAGSSCHEIBE D=6	
37	B0R000280R	LEVA EST. INVERTITORE	REVERSER EXTERNAL LEVER	LEVIER EXTER. REVERSEUR	HEBEL	
38	B0R000293R	RONDELLA PIANA D=8 UNI6592	PLAIN WASHER D=8 UNI6592	RONDELLE PLANE D=8 UNI6592	BEILAGSSCHEIBE PLATTE D-8	
39	F01020508R	VITE M12X1,75X25 U5739 8.8ZN	SCR. M12X1,75X25 U5739 8.8ZN	VIS M12X1,75X25 U5739 8.8 ZN	SCHRAUBE M12X1,75X25U57398.8ZN	
40	B0R000294R	RONDELLA ELAST.D=12 DIN128B	SPRING WASHER D=12 DIN128B	RONDELLE ELASTIQUE D=12 DIN128	ELASTICHER BEILAGSSCHEIBE D=12	
41	B0R000302R	IMPUGNATURA A SFERA	BALL HANDLE	BRANCHE A SPHERE	KUGELGRIFF	
42	B0R000291R	PERNO	PIN	TOURILLON	BOLZEN	
43	B0R000301R	MOLLA DM 9,8X1,2X25	SPRING DM 9,81X1,2X25	RESSORT DM 9,8X1,2X25	FEDER DM9,8X1,2X25	
44	B0R000281R	SELETTORE DISINNESTO	SELECTOR DISENGAGEMENT	SELECTEUR DEBRAYAGE	AUSLOSUNGSANWAHLER	
45	B0R000259R	ANELLO SPES. 40,2X54,8X0,3	SHIM RING 40,2X54,8X0,3	BAGUE EPAISSEUR 40,2X54,8X0,3	ELASTISCHER RING	
46	B0R000260R	ANELLO SPES. 40,2X54,8X0,4	SHIM RING 40,2X54,8X0,4	BAGUE EPAISSEUR 40,2X54,8X0,4	DISTANZRING 40,2X54,8X0,4	
47	B0R000261R	ANELLO SPES. 40,2X54,8X0,1	SHIM RING 40,2X54,8X0,1	BAGUE EPAISSEUR 40,2X54,8X0,1	DISTANZRING 40,2X54,8X0,1	
48	B0R000259R	ANELLO SPES. 40,2X54,8X0,3	SHIM RING 40,2X54,8X0,3	BAGUE EPAISSEUR 40,2X54,8X0,3	ELASTISCHER RING	
49	B0R000260R	ANELLO SPES. 40,2X54,8X0,4	SHIM RING 40,2X54,8X0,4	BAGUE EPAISSEUR 40,2X54,8X0,4	DISTANZRING 40,2X54,8X0,4	
50	B0R000261R	ANELLO SPES. 40,2X54,8X0,1	SHIM RING 40,2X54,8X0,1	BAGUE EPAISSEUR 40,2X54,8X0,1	DISTANZRING 40,2X54,8X0,1	

TAV_110

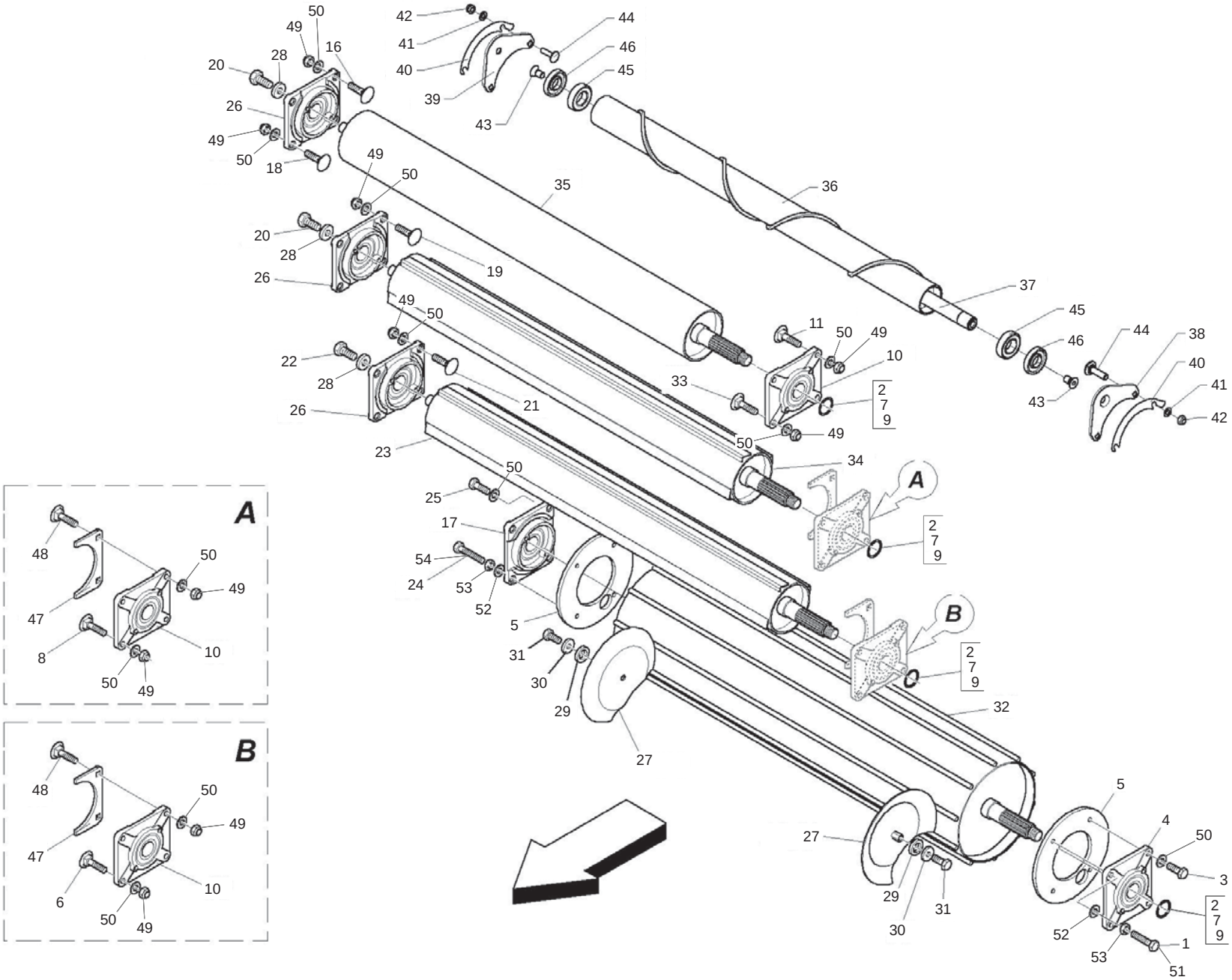

MASCHIO

cod. F07022343

RULLI
ROLLERS

TAV_110

Pos.	Cod.	Descrizione	Description	Description	Benennung	Descripcion
1	F01020519R	VITE M12X1,75X 60 U5739 8.8ZN	SCREW M12X1,75X 60 U5739 8.8ZN			
2	B01300151R	SPES. 40 48 2 ZINCATO	SHIM	ENTRETOISE	DISTANZSTUECK 40 48 2	
3	F01020512R	VITE M12X1,75X35 U5739 8.8ZN	SCR. M12X1,75X35 U5739 8.8ZN	VIS M12X1,75X35 5739 8.8 ZN	SCHR. M12X1,75X35 5739 8.8 ZN	TORN. M12X1,75X35 5739 8.8 ZN
4	B02700106R	SUPP. FLANG. FILETTATO	THREADED FLANGED SUPPORT	SUPPORT FILETE	HALTER	
5	B0C003056R	PIASTRA INTERNA RULLO GRANDE	ROLLER INNER PLATE	TOLE INTERIEUR ROULEAU	WALZEN INNENSCHEIBE	
6	B00523421R	VITE SPECIALE TTQST M12X35-8.8	SPECIAL SCREW	VIS SPCIALE	SCHRAUBE TTQST M12X 35-8.8	
7	B01300125R	SPES. 40 48 0,5 ZINCATO	SHIM GALV	ENTRETOISE GALV	DISTANZSTUECK 40 48 0,5	
8	B00523421R	VITE SPECIALE TTQST M12X35-8.8	SPECIAL SCREW	VIS SPCIALE	SCHRAUBE TTQST M12X 35-8.8	
9	B01300126R	SPES. 40 48 1 ZINC.ST_013	SHIM	ENTRETOISE	DISTANZSTUECK 40 408 1	
10	B02700051R	SUPPORTO FLANGIATO	FLANGED SUPPORT	SUPPORT EMBOUTI	FLANSCHLAGER	
11	B00523395R	VITE SPECIALE TTQST M12X45-8.8	SPECIAL SCREW	VIS SPECIALE	SCHRAUBE TTQST M12X 45-8.8	
16	B00523395R	VITE SPECIALE TTQST M12X45-8.8	SPECIAL SCREW	VIS SPECIALE	SCHRAUBE TTQST M12X 45-8.8	
17	B02700106R	SUPP. FLANG. FILETTATO	THREADED FLANGED SUPPORT	SUPPORT FILETE	HALTER	
18	B00523421R	VITE SPECIALE TTQST M12X35-8.8	SPECIAL SCREW	VIS SPCIALE	SCHRAUBE TTQST M12X 35-8.8	
19	B00523421R	VITE SPECIALE TTQST M12X35-8.8	SPECIAL SCREW	VIS SPCIALE	SCHRAUBE TTQST M12X 35-8.8	
20	F01020564R	VITE M16X2X35 U5739 8.8ZN	SCR. M16X2X35 U5739 8.8ZN	VIS M 16X35	SCHRAUBE M 16X35	TORNILLO M 16X35
21	B00523421R	VITE SPECIALE TTQST M12X35-8.8	SPECIAL SCREW	VIS SPCIALE	SCHRAUBE TTQST M12X 35-8.8	
22	F01020564R	VITE M16X2X35 U5739 8.8ZN	SCR. M16X2X35 U5739 8.8ZN	VIS M 16X35	SCHRAUBE M 16X35	TORNILLO M 16X35
23	B07S01822R	RULLO NEW	ROLLER NEW	ROULEAU NEW	WALZE NEW	
24	F01020512R	VITE M12X1,75X35 U5739 8.8ZN	SCR. M12X1,75X35 U5739 8.8ZN	VIS M12X1,75X35 5739 8.8 ZN	SCHR. M12X1,75X35 5739 8.8 ZN	TORN. M12X1,75X35 5739 8.8 ZN
25	F01020512R	VITE M12X1,75X35 U5739 8.8ZN	SCR. M12X1,75X35 U5739 8.8ZN	VIS M12X1,75X35 5739 8.8 ZN	SCHR. M12X1,75X35 5739 8.8 ZN	TORN. M12X1,75X35 5739 8.8 ZN
26	B02700051R	SUPPORTO FLANGIATO	FLANGED SUPPORT	SUPPORT EMBOUTI	FLANSCHLAGER	
27	B07S00970R	TAZZA RESTR.	CHAMBER TIGHTENING CUPS	TASSE DE RETRECISSEMENT	KAMMERVERENGUNGSTASSEN	
28	B01515091R	RALLA 17 52 6	FIFTH WHEEL	BUTEE	SCHEIBE	
29	B01518412R	RALLA 12 38 5	FIFTH WHEEL	BUTEE	SCHEIBE	
30	B01300625R	RALLA 25X42X6	FITH WHEEL	BUTEE	SCHEIBE 25X42X6	
31	F01020508R	VITE M12X1,75X25 U5739 8.8ZN	SCR. M12X1,75X25 U5739 8.8ZN	VIS M12X1,75X25 U5739 8.8 ZN	SCHRAUBE M12X1,75X25U57398.8ZN	TORNIL.M12X1,75X25 U5739 8.8ZN
32	B07S01841R	RULLO GRANDE NEW	BIG ROLLER	ROUELAU GRAND NEW	GROSSE WALZE	
33	B00523421R	VITE SPECIALE TTQST M12X35-8.8	SPECIAL SCREW	VIS SPCIALE	SCHRAUBE TTQST M12X 35-8.8	
34	B07S01822R	RULLO NEW	ROLLER NEW	ROULEAU NEW	WALZE NEW	
35	B07S00942R	RULLO MOT. INFERIORE NL	LOWER MOTOR ROLLER	ROULEAU MOTEUR INFERIEUR	UNTERE MOTORWALZE	
36	B07SP0333R	RULLO AIUTO PRODOTTO SPRINTER	ROLLER SPRINTER			
37	B03500324R	ALBERO LUNGO SPRINTER	SHAFT	ARBRE LONG SPRINTER	LANGE WELLE	
38	B0C005449R	ATTACCO RULLO SX	LEFT ROLLER ATTACHEMENT	ATTELAGE ROULEAU GAUCHE	WALZEANSCHLUSS LINKS	
39	B0C005448R	ATTACCO RULLO DX	RIGHT ROLLER ATTACHEMEN	ATTELAGE ROULEAU DROIT	WALZEANSCHLUSS RECHTS	
40	B0C005311R	SPESSORE	THICKNESS			
41	B01421230R	ROS.M12 13X 20X2,0 U1749 ZN	WASHER	RONDELLE	SCHEIBE	
42	F01230213R	DADO M12X1,75 U7474 CL8 ZN	NUT M12X1,75 U7474 6SZN	ECROU AUTOBL. M12	SELBSTSPERR.MUTTER M12	DADO AUTOBL. M12
43	B00441630R	VITE ZINC.TSPEI M16X 30-10.9	SCREW			
44	B00523395R	VITE SPECIALE TTQST M12X45-8.8	SPECIAL SCREW	VIS SPECIALE	SCHRAUBE TTQST M12X 45-8.8	
45	B02043517R	CUSC.. 6207-2RS CAT.B-ST004	BEARING	ROULEMENT	LAGER 6207-2RS	
46	B013P0150R	CHIUSURA RULLI PULITORE	ROLLER LOCK	FERMETURE ROULEAUX	WALZEN VERSCHLUSS	
47	B0C6P0003R	RIPARO RULLI ALETTATI	ROLLERS GUARD	PROTECTION ROULEAUX	SCHUETZ WALZEN	
48	B00523395R	VITE SPECIALE TTQST M12X45-8.8	SPECIAL SCREW	VIS SPECIALE	SCHRAUBE TTQST M12X 45-8.8	
49	F01230213R	DADO M12X1,75 U7474 CL8 ZN	NUT M12X1,75 U7474 6SZN	ECROU AUTOBL. M12	SELBSTSPERR.MUTTER M12	DADO AUTOBL. M12
50	B01421230R	ROS.M12 13X 20X2,0 U1749 ZN	WASHER	RONDELLE	SCHEIBE	
51	F01020512R	VITE M12X1,75X35 U5739 8.8ZN	SCR. M12X1,75X35 U5739 8.8ZN	VIS M12X1,75X35 5739 8.8 ZN	SCHR. M12X1,75X35 5739 8.8 ZN	TORN. M12X1,75X35 5739 8.8 ZN
52	B01421230R	ROS.M12 13X 20X2,0 U1749 ZN	WASHER	RONDELLE	SCHEIBE	
53	F01200293R	DADO M12X1,75 U5588 CL8 ZN	NUT M12X1,75 U5588 6S ZN	ECROU M12X1,75 U5588 6S ZN	MUTTER M12X1,75 U5588 6S ZN	TUERCA M12X1,75 U5588 6S ZN
54	F01020519R	VITE M12X1,75X 60 U5739 8.8ZN	SCREW M12X1,75X 60 U5739 8.8ZN			

TAV_120

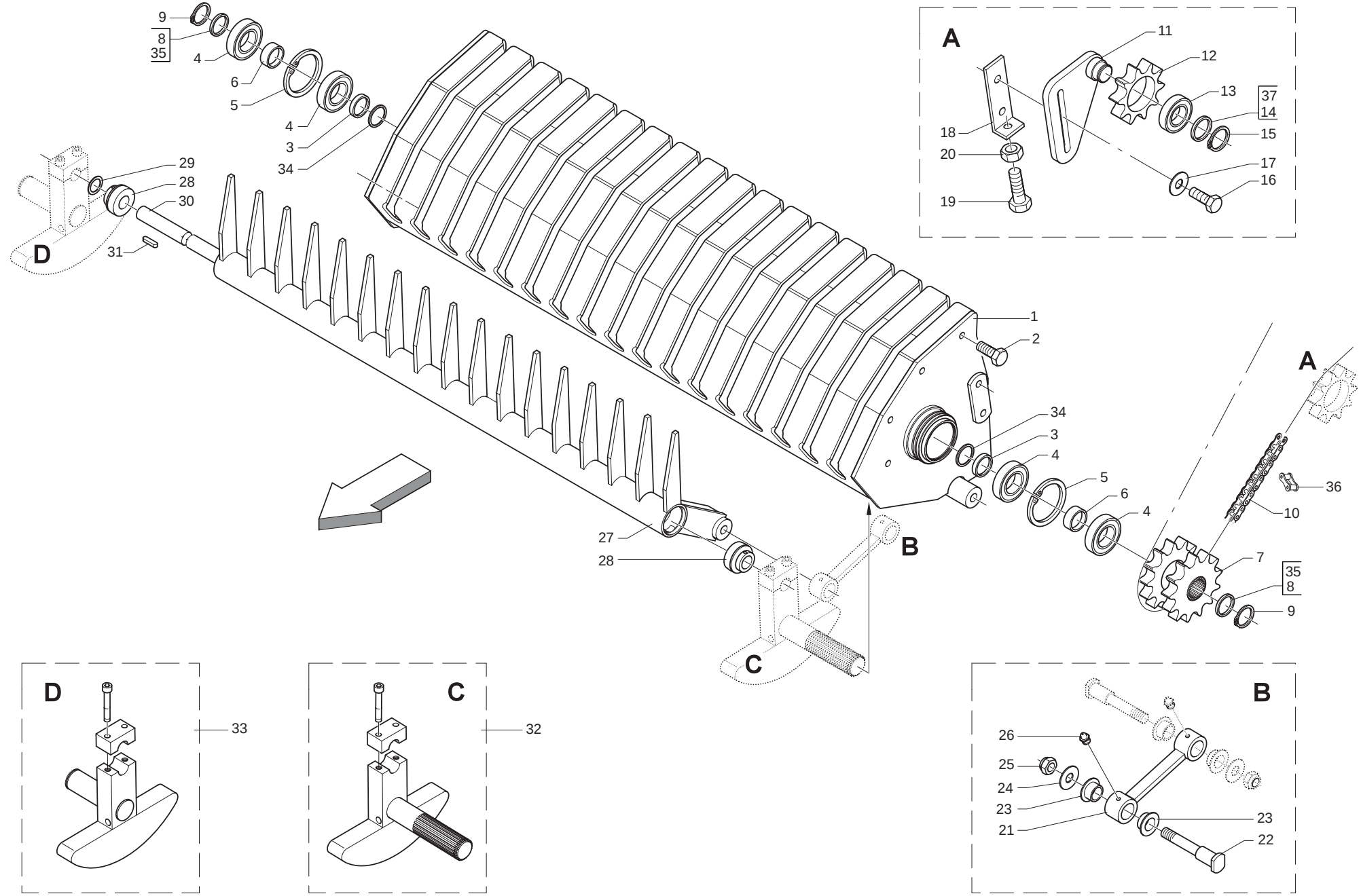

MASCHIO

cod. F07022343

INFALDATORE
FEEDING SYSTEM

TAV_120

Pos.	Cod.	Descrizione	Description	Description	Benennung	Descripcion
1	B07S00967R	TELAIO INFALDATORE	FEEDING SYSTEM FRAME	CHASSIS AMENEUR	ZUBRINGER RAHMEN	
2	F01020508R	VITE M12X1,75X25 U5739 8.8ZN	SCR. M12X1,75X25 U5739 8.8ZN	VIS M12X1,75X25 U5739 8.8 ZN	SCHRAUBE M12X1,75X25U57398.8ZN	TORNIL.M12X1,75X25 U5739 8.8ZN
3	B01300605R	DISTANZIALE 35X42X 5	SPACER	ENTRETOISE	DISTANZSTUECK 35X42X5	
4	B02043517R	CUSC.. 6207-2RS CAT.B-ST004	BEARING	ROULEMENT	LAGER 6207-2RS	
5	F02050403R	ANELLO E. DI 72X 2,5 U7437 C7	SEEGER RING E.72X2,5 U7437 C70	SEEGER E. 72X 2,5 U7437 C70	SEEGERING E. 72X 2,5 U7437 C70	ANILLO E. 72X 2,5 U7437 C70
6	B01300523R	DISTANZIALE 35X 45X12,5	SPACER	ENTRETOISE	DISTANZSTUECK 35X45X12,5	
7	B03400237R	INGR.DOPPIO Z12-12 1 INFALD.	DOUBLE GEAR Z=12 21 1 FOR RAK	ENGRENAGE DOUBLE	DOPPEL ZAHNRAD Z=12-12 1	
8	B01534416R	SPES. 35 43 1 ZINCATO	SHIM	ENTRETOISE	AUSGLEICHSCHEIBE 35X43X1	
9	F02050145R	ANELLO E. DE 35X1,5 U7435 C70	SEEGER RING D.35	BAGUE SEEGER D.35	SEEGERRING D.35	ANILLO SEEGER D.35
10	B030E1040R	CATENA RULLI ISO 16 B-1 40M	ROLLER CHAIN	CHAINE ROULEAUX	WALZENKETTE	
11	B07S00958R	TIRANTE FISSO	TIE ROD	TIRANT FIXE	ZUGSTANGE	
12	B03400274R	CORONA Z10-1 ISO F52 TRATT	SPROCKET Z=10-1	ENGRANAGE SPECIAL TRAITE	ZAHNKRANZ Z=10-1	
13	F04010170R	CUSC.D25 D52 B15 6205 2RS EX	BEARING D25 D52 B15 6205 2RS	ROULEMENT 6205 2RS	LAGER 6205 2RS	COJINETE 6205 2RS
14	B01300104R	SPES. 25,5 37 0,2	SHIM	ENTRETOISE	BEILAGSCHEIBE 25,5 37 0,2	
15	F02050101R	ANELLO E. DE 25X 1,2 U7435 C7	SEEGER RING E. 25X1,2 7435 C70	SEEGER E. 25X 1,2 U7435 C70	SEEGERING E. 25X 1,2 U7435 C70	ANILLO E. 25X 1,2 U7435 C70
16	F01020152R	VITE M12X1,75X40 U5737 8.8ZN	SCR. M12X1,75X40 U5737 8.8ZN	VIS M12X1,75X40 U5737 8.8 ZN	SCHRAUBE M12X1,75X40U57378.8ZN	TORNIL.M12X1,75X40 U5737 8.8ZN
17	B01516038R	RALLA 13 32 5	FIFTH WHEEL	BUTEE	SCHEIBE	
18	B0C005308R	TIRANTE INFALDATORE	FEEDER TIE ROD	TIRANT AMENEUR	RAFFER ZUSTAB	
19	F01020521R	VITE M12X1,75X65 U5739 8.8ZN	SCR. M12X1,75X65 U5739 8.8ZN	VIS M12X1,75X65 U5739 8.8ZN	SCHRAU.M12X1,75X65 U5739 8.8ZN	TORN.M12X1,75X65 U5739 8.8ZN
20	F01200293R	DADO M12X1,75 U5588 CL8 ZN	NUT M12X1,75 U5588 6S ZN	ECROU M12X1,75 U5588 6S ZN	MUTTER M12X1,75 U5588 6S ZN	TUERCA M12X1,75 U5588 6S ZN
21	B07S00966R	BIELLA INFALDATORE	FEEDER CONNECTING ROD	BIELLE AMENEUR	RAFFERPLEUELSTANGE	
22	B035P0159R	PERNO BIELLA INFALDATORE	CONNECTING ROD PIN	TOURILLON BIELLE	PLEUELZAPFEN	
23	B02500002R	BUSSOLA NYLON 22X28X16,5	BUSH NYLON 22X28X16,5	DOUILLE EN NYLON 22X28X16,5	NYLONBUCHSE	
24	B0C6P1263R	RALLA 22,2X40X3 OTTONE	WASHER	BUTEE	SCHEIBE	
25	B00920516R	DADO M16X 1,5 D985 6S ZN	NUT M16X1,5 D985 6S ZN	ECROU	SELBSTSICHERNDE MUTTER M16-5S	
26	F01100011R	ING.M 6X1 7663-A 9SMNPB28 ZN	GREASE NIPPLE M6X1 7663-A ZN	GRAISS. A BILLE M6X1 7663A ZN	SCHMIERBUECHE M6X1 7663-A ZN	ENGRAS. DE ESFE. M6X1 7663-AZN
27	B07S00983R	INFALDATORE NL	FEEDER	AMENEUR	RAFFER	
28	B07S00126R	CUSCINETTO CON RALLA	BEARING WITH FIFTH WHEEL	ROULEMENT AVEC BUTEE	LAGER MIT RING	
29	B01300106R	SPES. 25,5 37 1 ZINCATO	SHIM GALV	ENTRETOISE GALV	DISTANZSTUECK 25,5 37 1	
30	B03500038R	ALBERO INFALDATORE	FEEDER SHAFT	ARBRE AMENEUR	RAFFER ANTRIEBSWELLE	
31	F02150063R	LINGUETTA 8X 7X 22 U6604A	TAB 8 X 7 X 22 U6604A			
32	B07S00978R	BIELLA MOTORE INFALDATORE	MOTOR CONNECTING ROD	BIELLE MOTEUR AMENEUR	RAFFER TREIBSTANGE	
33	B07S00979R	BIELLA FOLLE INFALDATORE	IDLE CONNECTING ROD	BIELLE FOLLE AMENEUR	RAFFER UMLENKSTANGE	
34	B01522427R	SPES. 35 47 2	SHIM	ENTRETOISE	SCHEIBE	
35	B01534415R	SPES. 35 43 0,5 ZINCATO	SHIM	ENTRETOISE	AUSGLEICHSCHEIBE 35X43X0,5	
36	B030E0017R	GIUNTO MOLL N26 ISO 16 B-1	SPRING JOINT N.26 ISO 16 B-1	JOINT RESSORT	KETTENFEDER	
37	B01300104R	SPES. 25,5 37 0,2	SHIM	ENTRETOISE	BEILAGSCHEIBE 25,5 37 0,2	

TAV_130

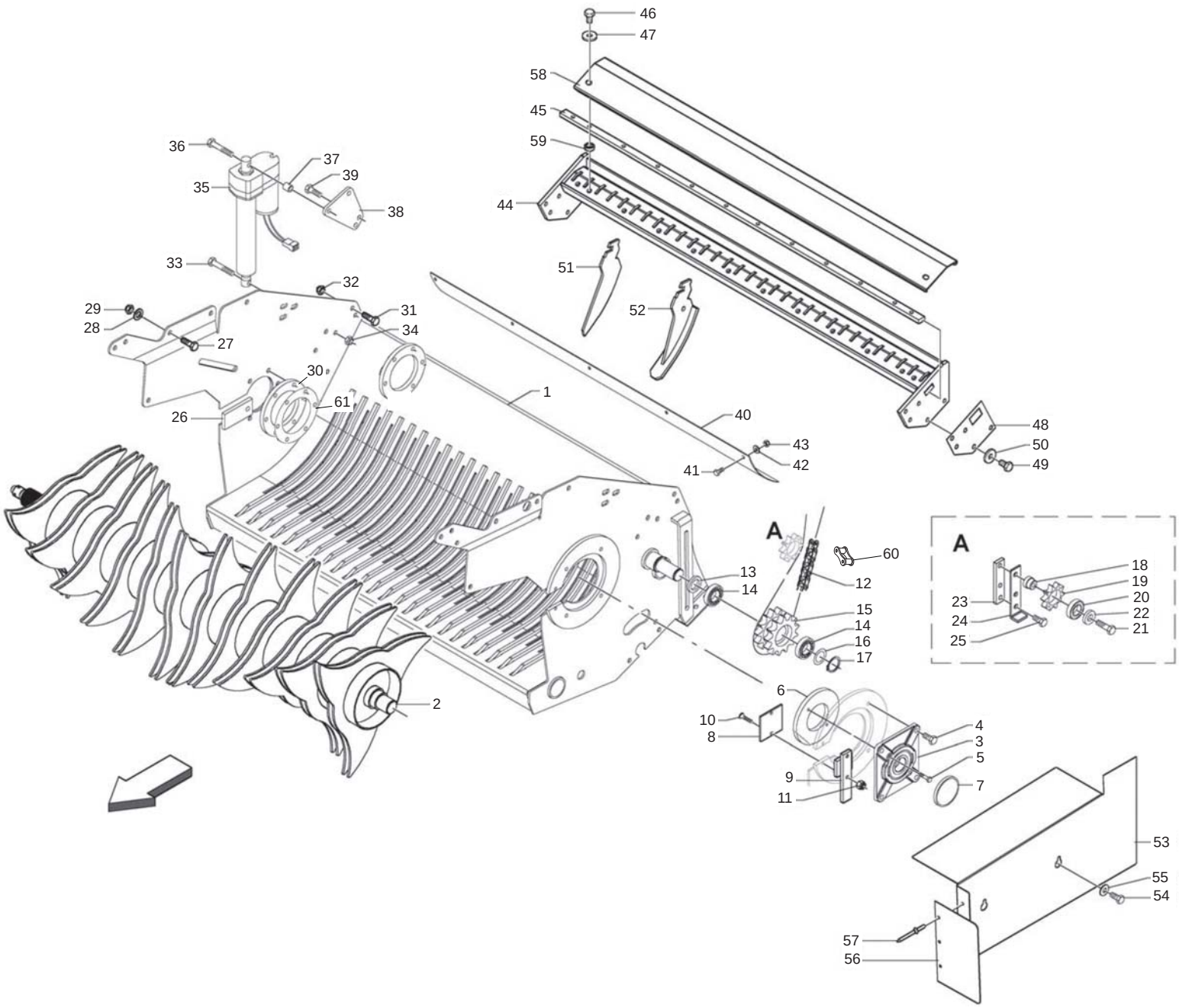

MASCHIO

cod. F07022343

CUT 13: TELAIO + ROTORE
CUT 13: FRAME + ROTOR

TAV_130

Pos.	Cod.	Descrizione	Description	Description	Benennung	Descripcion
1	B07S01791R	TELAIO TOPCUT NEW	NEW TOPCUT FRAME			
2	B07S01944R	ROT. CON DISCHI A 3 PUNTE HTC	ROTOR WITH 3 POINTED DISCS HTC	ROTOR AVEC DISQUES A 3 POINTS	ROTOR MIT SCHEIBEN	
3	B02700153R	SUPPORTO FLANGIATO	FLANGED SUPPORT	SUPPORT POUR ROTOR CUT	FLANSCHLAGER	
4	F01020510R	VITE M12X1,75X30 U5739 8.8ZN	SCR. M12X1,75X30 U5739 8.8ZN	VIS M12X1,75X30 U5739 8.8ZN	SCHRAU.M12X1,75X30 U5739 8.8ZN	TORN. M12X1,75X30 U5739 8.8ZN
5	B00190850R	VITE M 8X1,25X 50 U5737 8.8ZN	SCREW	VIS	VERZINKTE SCHRAUBE	
6	B01300714R	CONTROFLANGIA SUPP. FOLLE	IDLE SUPPORT COUNTERFLANGE	CONTRE-BRISE SUPPORT FOU	GEGENFLANSCH	
7	B04400001R	CAP. CHIUSO 110X10 TIPO C	CAP	COUVERCLE	GESCHLOSSENE KAPPE	
8	B0C003746R	COMPENSO FESSURA SX	LEFT SLOT COMPENSATION	EPAISSEURE FENTE GAUCHE	LINKER SPALTENAUSGLEICH	
9	B07SP0046R	FERMO COMPENSO LATO SX	LEFT SIDE SHIM LOCK	ARRET EPAISSEUR COTE GAUCHE	VERDICHTUNG BLOCK	
10	F01030060R	VITE M8X1,25X35 U5933 10.9ZD	SCREW M8X1,25X35 U5933 10.9ZD	VIS M8X1,25X35 U5933 10.9ZD	SCHRA.M8X1,25X35 U5933 10.9ZD	TORN. M8X1,25X35 U5933 10.9ZD
11	B00920208R	DADO M8X1 D985 8ZN	NUT M8X1 D985 8ZN	ECROU	SELBSTSICHERNDE MUTTER M8-5S	
12	B030E1039R	CATENA RULLI ISO 16 B-1 39M	ROLLER CHAIN ISO16 B-1 39M	CHAINE ROULEAUX	WALZENKETTE ISO 16 B-1 39M	
13	B01330957R	DISTANZIALE 35-48-7	SPACER	ENTRETOISE	DISTANZSTUECK 35X48X7	
14	B02043514R	CUSC.. 6007-2RS CAT.B-ST004	BEARING	ROULEMENT	LAGER 6007-2RS	
15	B03400005R	CORONA Z-12 12 1	SPROCKET Z-12 12 1	COURONNE	KRANZ Z-12 12 1	
16	B01534416R	SPES. 35 43 1 ZINCATO	SHIM	ENTRETOISE	AUSGLEICHSCHEIBE 35X43X1	
17	B01700035R	ANEL. D ARR. ALB. 35-E UNI3653	SEEGER RING	BAGUE SEEGER	SEEGERRING 35-E	
18	B01300302R	PERNO GALOPPINO	PIN	TOURILLON	BOLZEN FUER KETTENZAHNRAD	
19	B03400274R	CORONA Z10-1 ISO F52 TRATT	SPROCKET Z=10-1	ENGRANAGE SPECIAL TRAITE	ZAHNKRANZ Z=10-1	
20	F04010170R	CUSC.D25 D52 B15 6205 2RS EX	BEARING D25 D52 B15 6205 2RS	ROULEMENT 6205 2RS	LAGER 6205 2RS	COJINETE 6205 2RS
21	F01020160R	VITE M12X1,75X60 U5737 8.8ZN	SCR. M12X1,75X60 U5737 8.8ZN	VIS M12X1,75X60 U5737 8.8 ZN	SCHRA.M12X1,75X60 U5737 8.8 ZN	TORN. M12X1,75X60 U5737 8.8 ZN
22	B01518412R	RALLA 12 38 5	FIFTH WHEEL	BUTEE	SCHEIBE	
23	B0C002390R	FERMO	LOCK	ARRET	ARRETIERUNG	
24	B0C002389R	REGISTRO	REGISTER	VANNE	STELLVORRICHTUNG	
25	F01020510R	VITE M12X1,75X30 U5739 8.8ZN	SCR. M12X1,75X30 U5739 8.8ZN	VIS M12X1,75X30 U5739 8.8ZN	SCHRAU.M12X1,75X30 U5739 8.8ZN	TORN. M12X1,75X30 U5739 8.8ZN
26	B0C003748R	COMPENSO FESSURA DX	RIGHT SLOT COMPENSATION	EPAISSEUR FENTE DROITE	RECHTER SPALTENAUSGLEICH	
27	F01020510R	VITE M12X1,75X30 U5739 8.8ZN	SCR. M12X1,75X30 U5739 8.8ZN	VIS M12X1,75X30 U5739 8.8ZN	SCHRAU.M12X1,75X30 U5739 8.8ZN	TORN. M12X1,75X30 U5739 8.8ZN
28	B01421230R	ROS.M12 13X 20X2,0 U1749 ZN	WASHER	RONDELLE	SCHEIBE	
29	F01230213R	DADO M12X1,75 U7474 CL8 ZN	NUT M12X1,75 U7474 6SZN	ECROU AUTOBL. M12	SELBSTSPERR.MUTTER M12	DADO AUTOBL. M12
30	B01300509R	CONTROFLANGIA SUPP. MOT.	MOTOR SUPPORT COUNTERFLANGE	CONTRE-FLASQUE SUPPORT MOTEUR	MOTORHALTERGEGENFLANSCH	
31	F01020514R	VITE M12X1,75X40 U5739 8.8ZN	SCR. M12X1,75X40 U5739 8.8ZN	VIS M12X1,75X40 U5739 8.8ZN	SCHRA. M12X1,75X40 U5739 8.8ZN	TORN. M12X1,75X40 U5739 8,8ZN
32	F01230213R	DADO M12X1,75 U7474 CL8 ZN	NUT M12X1,75 U7474 6SZN	ECROU AUTOBL. M12	SELBSTSPERR.MUTTER M12	DADO AUTOBL. M12
33	F01020519R	VITE M12X1,75X 60 U5739 8.8ZN	SCREW M12X1,75X 60 U5739 8.8ZN			
34	F01230213R	DADO M12X1,75 U7474 CL8 ZN	NUT M12X1,75 U7474 6SZN	ECROU AUTOBL. M12	SELBSTSPERR.MUTTER M12	DADO AUTOBL. M12
35	B0E000064R	ATTUATORE COLTELLI	KNIVES ACTUATOR D12 21B5 04	ACTIONNEUR	E-MOTOR WARNER D12 21B5 04	
36	F01020524R	VITE M12X1,75X90 U5739 8.8ZN	SCR. M12X1,75X90 U5739 8.8ZN			
37	B01300746R	DISTANZIALE 12,5X21,3X15	SPACER			
38	B07S01203R	ATTACCO ATTUATORE	ACTUATOR ATTACHMENT	ATTELAGE ACTIONNEUR	E-MOTOR HALTERUNG	
39	F01040201R	VITE M12X1,75X 35 8.8 U5931 Z	SCREW M12X1,75X 35 8.8 U5931 Z			
40	B07V00092R	PROT. MOLLE COLT.	KNIFE SPRING PROTECTION	PROTECTION RESSORTS COUTEAUX	MESSERFEDERSCHUTZ	
41	F01020436R	VITE M8X1,25X20 U5739 8.8ZN	SCR. M8X1,25X20 U5739 8.8ZN	VIS M8X1,25X 20 U5739 8.8 ZN	SCHRAUBE M8X1,25X20U5739 8.8ZN	TORN. M8X1,25X20 U5739 8.8 ZN
42	F01420049R	ROS.M8 8,4X 32X 2 U6593 ZN	WASHER M8 8,4X32X2 U6593 ZN	RONDELLA M8 8,4X32X2 U6593 ZN	SCHEIBE M8 8,4X32X2 U6593 ZN	ARANDELA M8 8,4X32X2 U6593 ZN
43	B00920208R	DADO M8X1 D985 8ZN	NUT M8X1 D985 8ZN	ECROU	SELBSTSICHERNDE MUTTER M8-5S	
44	B07S01801R	TRAVERSA TOPCUT NEW	CROSS BAR	TRAVERSE TOPCUT NEW	QUERTRAEGER	
45	B0C005018R	ASTA DI SOSTEGNO	SUPPORT ROD	BARRE DE SUPPORT	STUETZSTANGE	
46	F01020476R	VITE M10X1,5X30 U5739 8.8ZN	SCR. M10X1,5X30 U5739 8.8ZN	VIS M10X1,5X30 U5739 8.8 ZN	SCHRAUBE M10X1,5X30U5739 8.8ZN	TORNIL.M10X1,5X30 U5739 8.8 ZN
47	F01410062R	ROS.M10 10,5X 18X 2 U6592 ZN	WASHER M10 10,5X 18X 2 U6592	RONDELLE M10 10,5X18X2 ZN	DICHTUNGSRING M10 10,5X18X2 ZN	RONDANA M10 10,5X18X2 ZN
48	B0C003616R	SPES. TRAVERSA RASCHIATORI	SCRAPER CROSS MEMBER SHIM	EPAISSEUR TRAVERSE RACLEUR	ABSTREIFER TRAEGER DISTANZSCHE	
49	F01020508R	VITE M12X1,75X25 U5739 8.8ZN	SCR. M12X1,75X25 U5739 8.8ZN	VIS M12X1,75X25 U5739 8.8 ZN	SCHRAUBE M12X1,75X25U57398.8ZN	TORNIL.M12X1,75X25 U5739 8.8ZN
50	B01515797R	RALLA 13 25 5	FIFTH WHEEL	BUTEE	SCHEIBE	
51	B0C6P0263R	RASCHIATORE	DETACHABLE SCRAPER	RACLEUR DEMONTABLE	DEMONTIERBARER ABSTREIFER	
52	B07SP0241R	RASCHIATORE E PATTINO	SCRAPER AND SLIDING BLOCK	RACLEUR ET PATIN	ABSTREIFER UND GLEITSCHUH	
53	B0C005268R	CARTER CUT	CUT GUARD	CARTER CUT	CARTER CUT	
54	F01020436R	VITE M8X1,25X20 U5739 8.8ZN	SCR. M8X1,25X20 U5739 8.8ZN	VIS M8X1,25X 20 U5739 8.8 ZN	SCHRAUBE M8X1,25X20U5739 8.8ZN	TORN. M8X1,25X20 U5739 8.8 ZN
55	F01410051R	ROS.M8 8,4X 17X1,6 U6592 ZN	WASHER M8 8,4X17X1,6 U6592 ZN	RONDELLE M8 8,4X17X1,6 ZN	SCHEIBE M8 8,4X17X1,6 U6592 ZN	ARANDELA M8 8,4X17X1,6 U6592ZN
56	B0C004239R	PROLUNGA CARTER CUT	CUT GUARD EXTENSION	RALLONGE CARTER CUT	VERLAENGERUNG CARTER CUT	
57	F02250111R	RIVETTO STR. 4 X 6 U9200A AL	RIVET 4 X6	RIVET 4 X6	KUPFERNIET 4 X6	REMACHE 4 X6

TAV_130

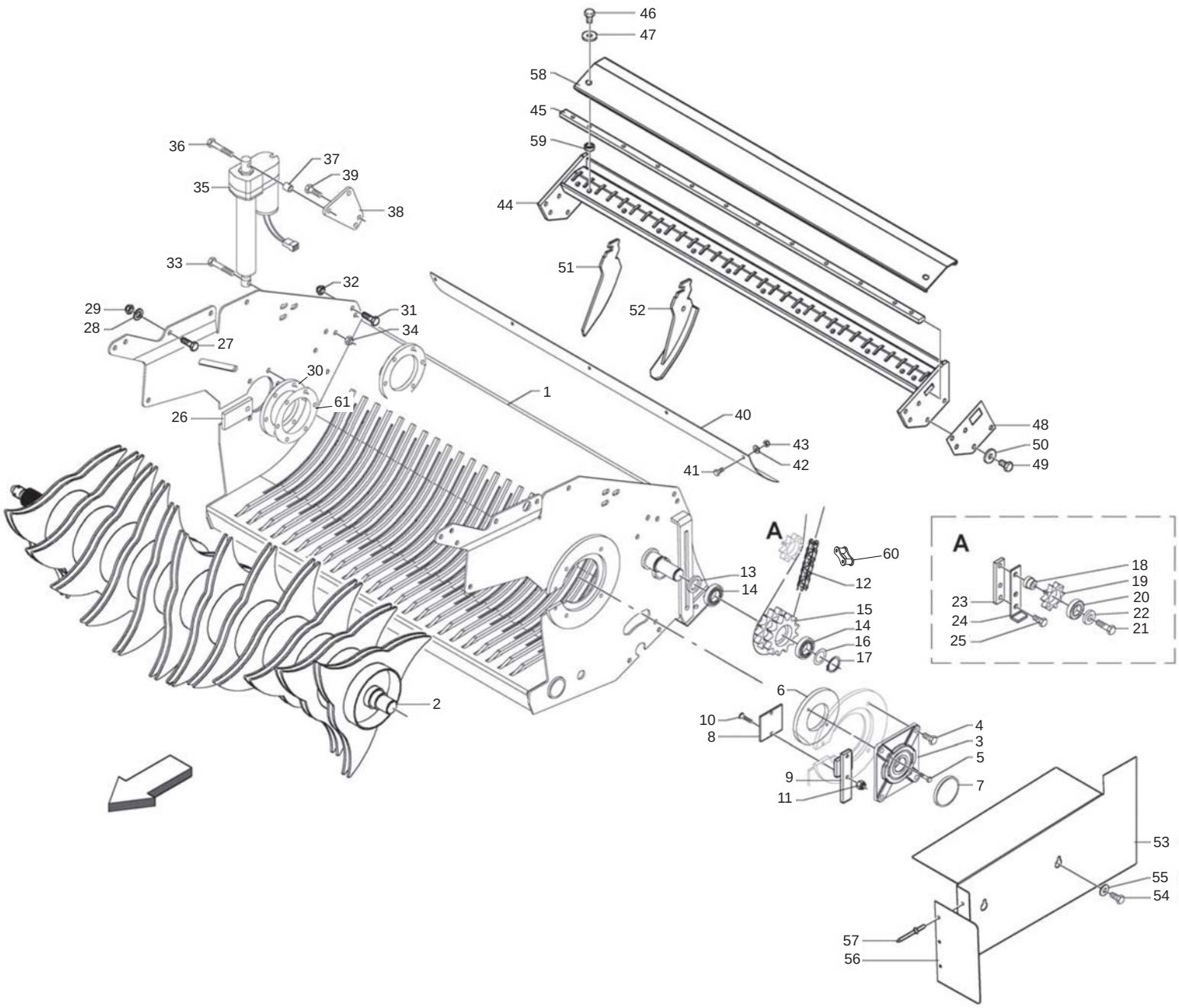

MASCHIO

cod. F07022343

CUT 13: TELAIO + ROTORE
CUT 13: FRAME + ROTOR

Pos.	Cod.	Descrizione	Description	Description	Benennung	Descripcion
58	B0C3P0153R	PROTEZIONI RASCHIATORI	PROTECTION	PROTECTION	SCHEUTZ ABSTERIFER	
59	B013C0126R	DISTANZIALE	SPACER	ENTRETOISE	DISTANZSTUECK	
60	B030E0017R	GIUNTO MOLL N26 ISO 16 B-1	SPRING JOINT N.26 ISO 16 B-1	JOINT RESSORT	KETTENFEDER	
61	B01300960R	SPESSORE SUPPORTO ROTORE	ROTOR SUPPORT SPACING	ENTRETOISE SUPPORT ROTOR	DISTANZSTUCK FUR ROTORLAGER	

TAV_140

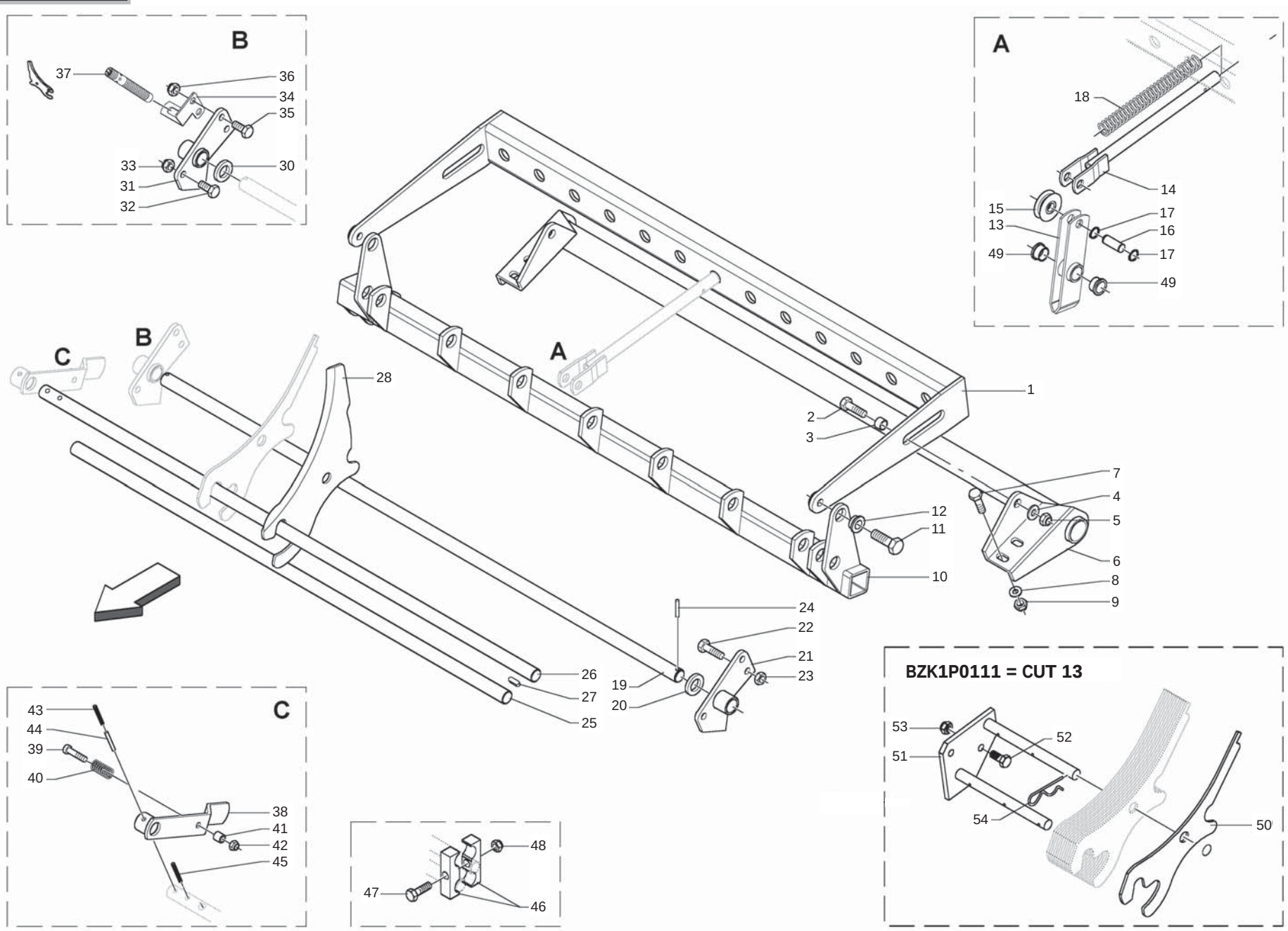
B
37
36
34
35
33
30
31
32
A
18
14
15
17
13
16
49
17
49
C
B
28
A
1
2
3
7
4
12
5
11
6
10
8
9
24
22
21
26
23
19
27
20
25
BZK1P0111 = CUT 13
53
52
51
54
50
C
43
44
39
40
38
41
42
45
48
47
46

CUT 13: TRAVERSA COLTELLI
CUT 13: KNIVES CROSSBAR

TAV_140

Pos.	Cod.	Descrizione	Description	Description	Benennung	Descripcion
1	B07S01802R	CONTRASTO MOLLE TOPCUT	KNIFE RESISTANCE TOPCUT	RESISTENCE DENTS TOPCUT	MESSERWIDERSTAND TOPCUT	
2	F01020568R	VITE M16X2X45 U5739 8.8ZN	SCR. M16X2X45 U5739 8.8ZN	VIS M 16X 2X45 U5739 8.8 ZG	SCHRAUBE M 16X 2X45 U5739 8.8	TORNILLO M16X 2X45 U5739 8.8
3	B01300745R	DISTANZIALE 16X20X14	SPACER	ENTRETOISE	DISTANZSTUECK 16X20X14	
4	F01410100R	ROS.M16 17X 30X 3 U6592 ZN	WASHER M16 17X30X3 U6592 ZN	RONDELLE M16 17X30X3 ZN	SCHRAUBE M16 17X 30X3 U6592 ZN	ARANDELA M16 17X30X 3 U6592 ZN
5	B00920516R	DADO M16X 1,5 D985 6S ZN	NUT M16X1,5 D985 6S ZN	ECROU	SELBSTSICHERNDE MUTTER M16-5S	
6	B07S01636R	COLLEGAMENTO INFERIORE NEW	LOWER CONNECTION	CONNECTION INFERIEURE	UNTERE VERBINDUNG	
7	F01020508R	VITE M12X1,75X25 U5739 8.8ZN	SCR. M12X1,75X25 U5739 8.8ZN	VIS M12X1,75X25 U5739 8.8 ZN	SCHRAUBE M12X1,75X25U57398.8ZN	TORNIL.M12X1,75X25 U5739 8.8ZN
8	B01421230R	ROS.M12 13X 20X2,0 U1749 ZN	WASHER	RONDELLE	SCHEIBE	
9	F01230213R	DADO M12X1,75 U7474 CL8 ZN	NUT M12X1,75 U7474 6SZN	ECROU AUTOBL. M12	SELBSTSPERR.MUTTER M12	DADO AUTOBL. M12
10	B07S01803R	COM. COLT. TOPCUT	KNIFE CONTROL TOPCUT	COMMANDE COUTEAUX TOPCUT	MESSERBETAETIGUNG TOPCUT	
11	F01020562R	VITE M16X2X30 U5739 8.8ZN	SCR. M16X2X30 U5739 8.8ZN	VIS M16X2X30 U5739 8.8 ZN	SCHRAUBE M16X2X30 U5739 8.8 ZN	TORNILLO M16X2X30 U5739 8.8 ZN
12	B01300706R	BUSSOLA DI GUIDA	GUIDE BUSH	DOUILLE DE GUIDE	FUHRUNGSBUCHSE	
13	B07SP0024R	BILANCINO TOPCUT	TOPCUT ROCKER ARM	PALONNIER TOPCUT	SCHWINGE TOPCUT	
14	B07S01125R	SOSTEGNO MOLLE	SPRING BRAKET	SUPPORT RESSORTS	FEDERHALTERUNG	
15	B03800014R	ROTELLA GUIDA COLTELLI	KNIVES GUIDE PULLEY	GALET GUIDE COUTEAUX	MESSER FUHRUNGSROLLE	
16	B01300694R	PERNO CARRUCOLA COLTELLO	KNIFE ROLLER PIN	TOURILLON POULIE COUTEAU	MESSERFUHRUNGSROLLENBOLZEN	
17	B01700016R	ANEL. D ARR. ALB. 16-E UNI3653	SEEGER RING	BAGUE SEEGER	SEEGERING	
18	B01800049R	MOLLA TRAVERSA COLTELLI	SPRING KNIV.CONTROL 5 30 293C	RESSORT	FEDER	
19	B03500034R	PERNO FULCRO	PIVOT	TOURILLON	DREHZAPFEN	
20	B01300036R	RALLA 25,5X40 X 4	FIFTH WHEEL	BUTEE	LAGERSCHALE 25,5X40X4	
21	B07S01145R	FULCRO SX LEVERISMI	LEFT LINKAGE FULCRUM	POINT D APPUI GAUCHE LEVIERS	LINKER HEBELWERKSCHWENKPUNKT	
22	F01020510R	VITE M12X1,75X30 U5739 8.8ZN	SCR. M12X1,75X30 U5739 8.8ZN	VIS M12X1,75X30 U5739 8.8ZN	SCHRAU.M12X1,75X30 U5739 8.8ZN	TORN. M12X1,75X30 U5739 8.8ZN
23	F01230213R	DADO M12X1,75 U7474 CL8 ZN	NUT M12X1,75 U7474 6SZN	ECROU AUTOBL. M12	SELBSTSPERR.MUTTER M12	DADO AUTOBL. M12
24	B01110635R	SPINA ELAST. 6X 35 SS DIN 1481	PIN	GOUPILLE	STIFT	
25	B035P0016R	ASTA NEW	NEW ROD	TIGE NEW	STAB NEW	
26	B035P0015R	FULCRO COLT. NEW	NEW KNIVES FULCRUM	POINT D APPUI COUTEAUX NEW	FULCRUM MESSER NEW	
27	F02150064R	LINGUETTA 8X 7X 25 U6604A	PARALLEL KEY 8X 7X 25 U6604A	CLAVETTE 8X7X25	FEDER 8X7X25 UNI 6604	LLAVE 8X7X25
28	B07U00035R	COLTELLO ULTRACUT	TOPCUT KNIFE	COUTEAU CUT	SPEZIAL TOPCUT KLINGE	
30	B01300036R	RALLA 25,5X40 X 4	FIFTH WHEEL	BUTEE	LAGERSCHALE 25,5X40X4	
31	B07S01144R	FULCRO DX LEVERISMI	RIGHT LINKAGE FULCRUM	POINT D APPUI DROIT LEVIERS	RECHTER HEBELWERKSCHWENKPUNKT	
32	F01020510R	VITE M12X1,75X30 U5739 8.8ZN	SCR. M12X1,75X30 U5739 8.8ZN	VIS M12X1,75X30 U5739 8.8ZN	SCHRAU.M12X1,75X30 U5739 8.8ZN	TORN. M12X1,75X30 U5739 8.8ZN
33	F01230213R	DADO M12X1,75 U7474 CL8 ZN	NUT M12X1,75 U7474 6SZN	ECROU AUTOBL. M12	SELBSTSPERR.MUTTER M12	DADO AUTOBL. M12
34	B0C004233R	SOSTEGNO PROSIMITI CUT	CUT SENSOR SUPPORT	SUPPORT SENSEUR CUT	CUT SENSORHALTERUNG	
35	F01020512R	VITE M12X1,75X35 U5739 8.8ZN	SCR. M12X1,75X35 U5739 8.8ZN	VIS M12X1,75X35 5739 8.8 ZN	SCHR. M12X1,75X35 5739 8.8 ZN	TORN. M12X1,75X35 5739 8.8 ZN
36	F01230213R	DADO M12X1,75 U7474 CL8 ZN	NUT M12X1,75 U7474 6SZN	ECROU AUTOBL. M12	SELBSTSPERR.MUTTER M12	DADO AUTOBL. M12
37	B0E000056R	SENSORE PROSSIMITA BALLA M12	PROXIMITY SENSOR	CAPTEUR DE PROXIMITE	ABSTANDSMELDER	
38	B07S01159R	MANIGLIA DI SICUREZZA	SAFETY HANDLE	POULIE DE SURETE	SICHERUNGSHEBEL	
39	F01040130R	VITE M10X1,5X60 U5931 8.8ZN	SCR. M10X1,5X60 U5931 8.8ZN			
40	B01821993R	MOLLA	SPRING	RESSORT	FEDER	
41	B01300401R	BUSSOLA FILETTATA	PIN WITHOUT NET	DOUILLE FILETEE	NETZAUFNAHMEZANGENBOLZEN	
42	F01230202R	DADO M10X 1,5 D985 8 ZN	NUT M10 D985	ECROU AUTOBL. M10	SELBSTSPERR.MUTTER M10	DADO AUTOBL. M10
43	F02100142R	SPINA E.P. 8X 40 U6873 C70 BR	ELASTIC PIN 8X40	GOUJON ELASTIQUE 8X40	SPANNHUELSE 8X40	ESPINA ELASTICA 8X40
44	F02100090R	SPINA E.P. 5X 40 U6873 C70 BR	ELASTIC PIN 5X40	GOUJON ELASTIQUE 5X40	SPANNHUELSE 5X40	ESPINA ELASTICA 5X40
45	F02100142R	SPINA E.P. 8X 40 U6873 C70 BR	ELASTIC PIN 8X40	GOUJON ELASTIQUE 8X40	SPANNHUELSE 8X40	ESPINA ELASTICA 8X40
46	B027P0001R	SEMIBIELLA DI TRASMISSIONE	DRIVE HALF ROD	DEMI BIELLE DE TRANSMISSION	HALB-KOLBENSTANGE	
47	F01020164R	VITE M12X1,75X70 U5737 8.8ZN	SCREW M12X1,75X70 U5737 8.8ZN	VIS M12X1,75X70 ZN	SCHR. M12X1,75X70 U5737 8.8 ZN	TORN. M12X1,75X70 U5737 8.8 ZN
48	F01230213R	DADO M12X1,75 U7474 CL8 ZN	NUT M12X1,75 U7474 6SZN	ECROU AUTOBL. M12	SELBSTSPERR.MUTTER M12	DADO AUTOBL. M12
49	B025P0003R	BUSSOLA NYLON	NYLON BUSH	DOUILLE EN NYLON	BUCHSE	
50	B0C005006R	FINTO COLT. CUT	BLANK KNIFE CUT	FAUX COUTEAU CUT	BLINDMESSER CUT	
51	B07S01031R	PORTA COLT.	KNIFE HOLDER	PORTE-COUTEAUX	MESSERTRAEGER	
52	F01020510R	VITE M12X1,75X30 U5739 8.8ZN	SCR. M12X1,75X30 U5739 8.8ZN	VIS M12X1,75X30 U5739 8.8ZN	SCHRAU.M12X1,75X30 U5739 8.8ZN	TORN. M12X1,75X30 U5739 8.8ZN
53	F01230213R	DADO M12X1,75 U7474 CL8 ZN	NUT M12X1,75 U7474 6SZN	ECROU AUTOBL. M12	SELBSTSPERR.MUTTER M12	DADO AUTOBL. M12
54	F02200374R	COPIGLIA R 4X 82 ZN	SPRING SPLIT PIN 4X82	GOUPILLE 4X82	SPLINT 4X82	PASADOR 4X82

TAV_150

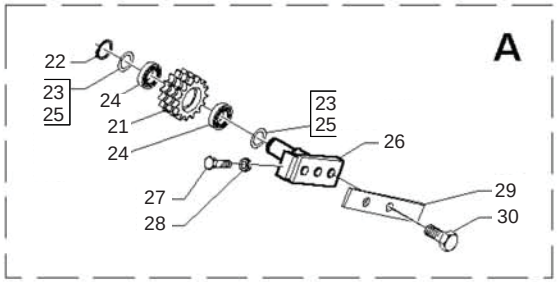

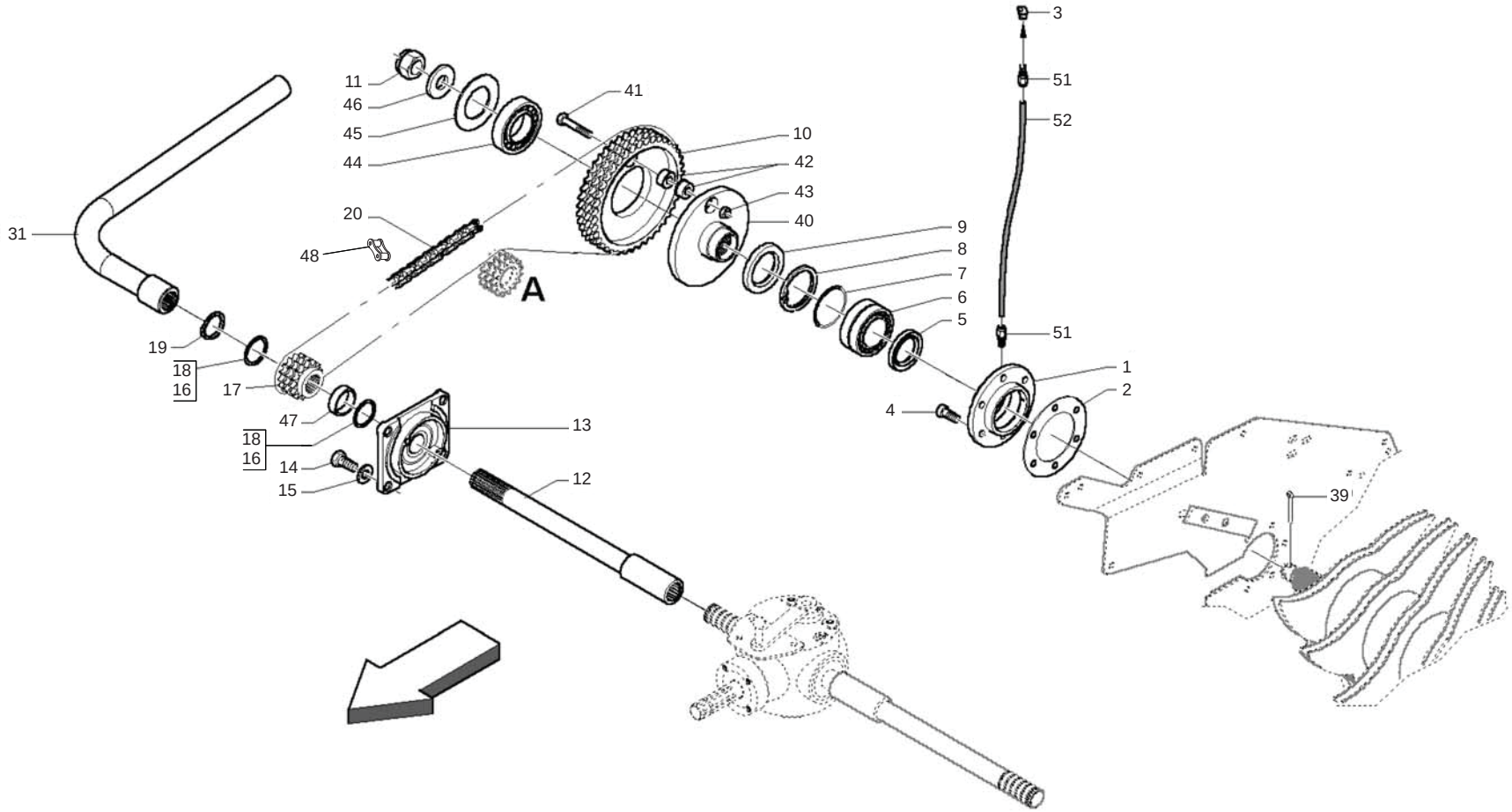

MASCHIO

cod. F07022343

SICUREZZA TRASMISSIONE MECCANICA CON BULLONE
TRANSMISSION SAFETY DEVICE MECHANICAL WITH BOLT

TAV_150

Pos.	Cod.	Descrizione	Description	Description	Benennung	Descripcion
1	B02700052R	SUPP. COM. ROT.	CONTROL ROTOR SUPPORT	SUPPORT CONTROLE ROTOR	LAGER DES ROTORSANTRIEBS	
2	B01300960R	SPESSORE SUPPORTO ROTORE	ROTOR SUPPORT SPACING	ENTRETOISE SUPPORT ROTOR	DISTANZSTUCK FUR ROTORLAGER	
3	B04200610R	INGRASS.A SFERE M6X1 LUNGO	GREASE NIPPLE	GRAISSEUR HYDRAULIQUE	GERADER SCHMIERNIPPEL M6X1	
4	F01040140R	VITE M12X1,75X 40 U5931 8.8ZN	SCREW M12X1,75X 40 U5931 8.8Z			
5	B04304966R	ANELLO TENUTA 55X 85X10 NORM	SEAL	BAGUE	DICHTUNG 55X85X10	
6	B02335023R	CUSC. 22210 CAT.B-ST004	BEARING	ROULEMENT	LAGER 22210	
7	B01534318R	SPES. 80 90 0,2	SHIM	ENTRETOISE	DISTANZSTUECK 80 90 0,2	
8	B01710090R	ANEL. D ARR. FORO 90-I UNI3654	SEEGER RING	BAGUE SEEGER	SEEGERRING 90-I	
9	B04305668R	ANELLO TENUTA 65X 90X10 NORM	SEAL	BAGUE	DICHTUNG 65X90X10	
10	B03400070R	INGR. TRIP Z42 - 3 4 X 7 16	TRIPLE GEAR Z=42-3 4 X7 16	ENGRENAGE TRIPLE	DREIFACH ZAHNRAD Z=42 -3 4 X	
11	B00851530R	DADO M30X 2 U5588 6S ZN	NUT	ECROU	KRONENMUTTER M30X2-6S	
12	B0R000304R	ALBERO PROLUNGA L=602	EXTENSION SHAFT L=602	ARBRE RALLONGE L=602	VERLAENGERUNGSWELLE L=602	
13	B02700051R	SUPPORTO FLANGIATO	FLANGED SUPPORT	SUPPORT EMBOUTI	FLANSCHLAGER	
14	F01020512R	VITE M12X1,75X35 U5739 8.8ZN	SCR. M12X1,75X35 U5739 8.8ZN	VIS M12X1,75X35 5739 8.8 ZN	SCHR. M12X1,75X35 5739 8.8 ZN	TORN. M12X1,75X35 5739 8.8 ZN
15	B01421230R	ROS.M12 13X 20X2,0 U1749 ZN	WASHER	RONDELLE	SCHEIBE	
16	B01300150R	SPES. 40 48 1,5 ZINCATO	SHIM GALV	ENTRETOISE GALV	DISTANZSTUECK 40 48 1,5	
17	B03400072R	INGR.TRIPLO Z=13-3 4 X7 16	TRIPLE GEAR Z=13-3 4 X7 16	ENGRENAGE TRIPLE	DREIFACH ZAHNRAD Z=13-3 4 X7 1	
18	B01300151R	SPES. 40 48 2 ZINCATO	SHIM	ENTRETOISE	DISTANZSTUECK 40 48 2	
19	B01700040R	ANEL. D ARR. ALBERO 40-E UNI 3	SEEGER RING	BAGUE SEEGER	SEEGERRING 40-E	
20	B030F1117R	CATENA RULLI ISO 12 B - 3 117M	ROLLER CHAIN ISO12 B-3 117M	CHAINE ROULEAUX	WALZENKETTE ISO 12 B	
21	B03400073R	INGR.TRIPLO Z=13-3 4 X7 16	TRIPLE GEAR Z=13-3 4 X7 16	ENGRENAGE TRIPLE	DREIFACH-ZAHNRAD Z=13-3 4 X7	
22	F02050101R	ANELLO E. DE 25X 1,2 U7435 C7	SEEGER RING E. 25X1,2 7435 C70	SEEGER E. 25X 1,2 U7435 C70	SEEGERING E. 25X 1,2 U7435 C70	ANILLO E. 25X 1,2 U7435 C70
23	B01300105R	SPES. 25,5 37 0,5	SHIM	ENTRETOISE	DISTANZSTUECK 25,5 37 0,5	
24	B02042512R	CUSC 6005-2RS CAT.B-ST004	BEARING	ROULEMENT	LAGER	
25	B01300106R	SPES. 25,5 37 1 ZINCATO	SHIM GALV	ENTRETOISE GALV	DISTANZSTUECK 25,5 37 1	
26	B07S00848R	PERNO TENDITORE	TENSIONER PIN	TOURILLON TENDEUR	SPANNBOLZEN	
27	F01020522R	VITE M12X1,75X80 U5739 8.8ZN	SCR. M12X1,75X80 U5739 8.8ZN	VIS M12X1,75X80 U5739 8.8ZN	SCHRA.M12X1,75X80 U5739 8.8ZN	TORN.M12X1,75X80 U5739 8.8ZN
28	F01200293R	DADO M12X1,75 U5588 CL8 ZN	NUT M12X1,75 U5588 6S ZN	ECROU M12X1,75 U5588 6S ZN	MUTTER M12X1,75 U5588 6S ZN	TUERCA M12X1,75 U5588 6S ZN
29	B0C002732R	RINFORZO	REINFORCEMENT	RENFORT	VERSTAERKUNG	
30	F01020564R	VITE M16X2X35 U5739 8.8ZN	SCR. M16X2X35 U5739 8.8ZN	VIS M 16X35	SCHRAUBE M 16X35	TORNILLO M 16X35
31	B07S00869R	MANOVELLA SGOLFAMENTO	OVERLOAD CRANCK	MANIVELLE	KURBEL ZUR ENTSTOPFUNG	
39	B01150560R	COPIGLIA 5X 70 U1336 ZN	GALV PIN	GOUPILLE GALV	SPLINT	
40	B02700079R	SICUREZZA ROT.	ROTOR SAFETY	SURETE ROTEUR	SCHERBOLZEN	
41	F01020203R	VITE M14X2X60 U5737 8.8ZN	SCR. M14X2X60 U5737 8.8ZN	VIS M 14X60	SCHRAUBE M 14X60	TORNILLO M 14X60
42	B01300702R	BUSSOLA D=35 D=14.5 L=18.5	BUSH D=35 D=14.5 L=18.5	DOUILLE	BUCHSE	
43	B00920514R	DADO M14X 2 D985 8 ZN	NUT	ECROU	SELBSTSICHERNDE MUTTER M14-5S	
44	B02047020R	CUSC. 6014-2RS CAT.B-ST004	BEARING	ROULEMENT	LAGER 6014-2RS	
45	B01300824R	FLANGIA	FLANGE	FLASQUE	FLANSCH	
46	B01300823R	RALLA 30,5X92X8	FITH WHEEL	BUTEE	SCHEIBE 30,5X92X8	
47	B01300355R	DISTANZIALE 40X54X20	SPACER	ENTRETOISE	ABSTANDSTUECK 40X54X20	
48	B030F0017R	GIUNTO MOLL.N. 26 ISO 12 B - 3	SPRING JOINT N.26 ISO 12 B-3	JOINT RESSORT	KUPPLUNGSSTUCK N. 26 ISO	
51	B0H000259R	RACCORDO M6X1 COMPLETO	FITTING OUT M6X1	RACCORD	KUPPLUNG M6X1	
52	B0H0P0029R	TUBETTO NYLON 4 L 180	NYLON HOSE	TUYAU EN NYLON	KLEINS ROHR AUS NYLON	

TAV_160

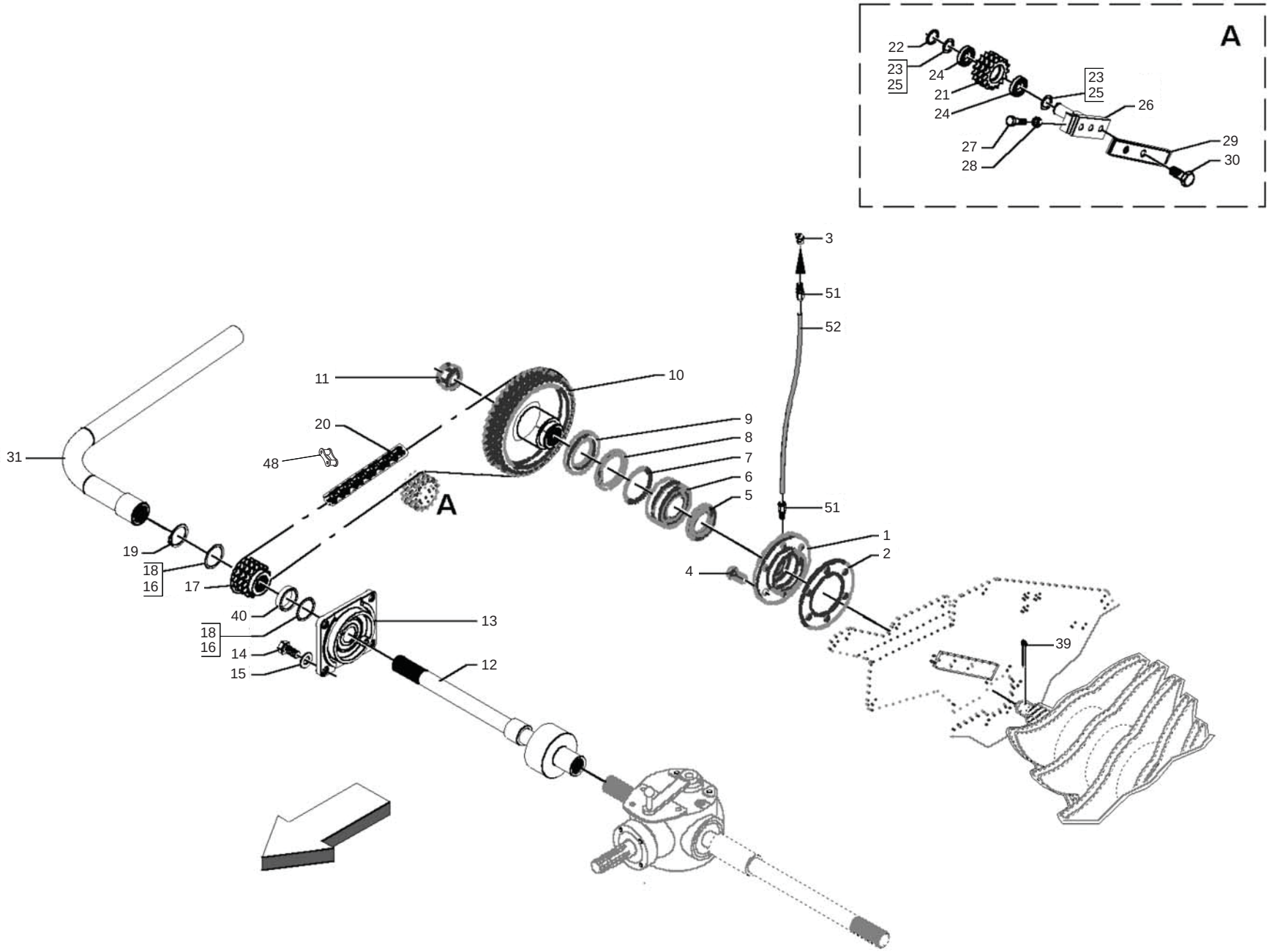

MASCHIO

cod. F07022343

SICUREZZA TRASMISSIONE AUTOMATICA "AFC"
TRANSMISSION SAFETY DEVICE AUTOMATIC "AFC"

TAV_160

Pos.	Cod.	Descrizione	Description	Description	Benennung	Descripcion
1	B02700052R	SUPP. COM. ROT.	CONTROL ROTOR SUPPORT	SUPPORT CONTROLE ROTOR	LAGER DES ROTORSANTRIEBS	
2	B01300960R	SPESSORE SUPPORTO ROTORE	ROTOR SUPPORT SPACING	ENTRETOISE SUPPORT ROTOR	DISTANZSTUCK FUR ROTORLAGER	
3	B04200610R	INGRASS.A SFERE M6X1 LUNGO	GREASE NIPPLE	GRAISSEUR HYDRAULIQUE	GERADER SCHMIERNIPPEL M6X1	
4	F01040140R	VITE M12X1,75X 40 U5931 8.8ZN	SCREW M12X1,75X 40 U5931 8.8Z			
5	B04304966R	ANELLO TENUTA 55X 85X10 NORM	SEAL	BAGUE	DICHTUNG 55X85X10	
6	B02335023R	CUSC. 22210 CAT.B-ST004	BEARING	ROULEMENT	LAGER 22210	
7	B01534318R	SPES. 80 90 0,2	SHIM	ENTRETOISE	DISTANZSTUECK 80 90 0,2	
8	B01710090R	ANEL. D ARR. FORO 90-I UNI3654	SEEGER RING	BAGUE SEEGER	SEEGERRING 90-I	
9	B04305668R	ANELLO TENUTA 65X 90X10 NORM	SEAL	BAGUE	DICHTUNG 65X90X10	
10	B07S01609R	INGRANAGGIO ROT.	ROTOR SPROCKET	ENGRANAGE ROTOR	ROTOR ZAHNRAD	
11	B00851530R	DADO M30X 2 U5588 6S ZN	NUT	ECROU	KRONENMUTTER M30X2-6S	
12	B03600094R	LIMITATORE CON PROLUNGA BYPY	TORQUE LIMITER WITH EXTENSION	LIMITEUR AVEC RALLONGE	UBERLASTKUPPLUNG MIT VERLANGER	
13	B02700051R	SUPPORTO FLANGIATO	FLANGED SUPPORT	SUPPORT EMBOUTI	FLANSCHLAGER	
14	F01020512R	VITE M12X1,75X35 U5739 8.8ZN	SCR. M12X1,75X35 U5739 8.8ZN	VIS M12X1,75X35 5739 8.8 ZN	SCHR. M12X1,75X35 5739 8.8 ZN	TORN. M12X1,75X35 5739 8.8 ZN
15	B01421230R	ROS.M12 13X 20X2,0 U1749 ZN	WASHER	RONDELLE	SCHEIBE	
16	B01300150R	SPES. 40 48 1,5 ZINCATO	SHIM GALV	ENTRETOISE GALV	DISTANZSTUECK 40 48 1,5	
17	B03400072R	INGR.TRIPLO Z=13-3 4 X7 16	TRIPLE GEAR Z=13-3 4 X7 16	ENGRENAGE TRIPLE	DREIFACH ZAHNRAD Z=13-3 4 X7 1	
18	B01300151R	SPES. 40 48 2 ZINCATO	SHIM	ENTRETOISE	DISTANZSTUECK 40 48 2	
19	B01700040R	ANEL. D ARR. ALBERO 40-E UNI 3	SEEGER RING	BAGUE SEEGER	SEEGERRING 40-E	
20	B030F1117R	CATENA RULLI ISO 12 B - 3 117M	ROLLER CHAIN ISO12 B-3 117M	CHAINE ROULEAUX	WALZENKETTE ISO 12 B	
21	B03400073R	INGR.TRIPLO Z=13-3 4 X7 16	TRIPLE GEAR Z=13-3 4 X7 16	ENGRENAGE TRIPLE	DREIFACH-ZAHNRAD Z=13-3 4 X7	
22	F02050101R	ANELLO E. DE 25X 1,2 U7435 C7	SEEGER RING E. 25X1,2 7435 C70	SEEGER E. 25X 1,2 U7435 C70	SEEGERING E. 25X 1,2 U7435 C70	ANILLO E. 25X 1,2 U7435 C70
23	B01300105R	SPES. 25,5 37 0,5	SHIM	ENTRETOISE	DISTANZSTUECK 25,5 37 0,5	
24	B02042512R	CUSC 6005-2RS CAT.B-ST004	BEARING	ROULEMENT	LAGER	
25	B01300106R	SPES. 25,5 37 1 ZINCATO	SHIM GALV	ENTRETOISE GALV	DISTANZSTUECK 25,5 37 1	
26	B07S00848R	PERNO TENDITORE	TENSIONER PIN	TOURILLON TENDEUR	SPANNBOLZEN	
27	F01020522R	VITE M12X1,75X80 U5739 8.8ZN	SCR. M12X1,75X80 U5739 8.8ZN	VIS M12X1,75X80 U5739 8.8ZN	SCHRA.M12X1,75X80 U5739 8.8ZN	TORN.M12X1,75X80 U5739 8.8ZN
28	F01200293R	DADO M12X1,75 U5588 CL8 ZN	NUT M12X1,75 U5588 6S ZN	ECROU M12X1,75 U5588 6S ZN	MUTTER M12X1,75 U5588 6S ZN	TUERCA M12X1,75 U5588 6S ZN
29	B0C002732R	RINFORZO	REINFORCEMENT	RENFORT	VERSTAERKUNG	
30	F01020564R	VITE M16X2X35 U5739 8.8ZN	SCR. M16X2X35 U5739 8.8ZN	VIS M 16X35	SCHRAUBE M 16X35	TORNILLO M 16X35
31	B07S00869R	MANOVELLA SGOLFAMENTO	OVERLOAD CRANCK	MANIVELLE	KURBEL ZUR ENTSTOPFUNG	
39	B01150560R	COPIGLIA 5X 70 U1336 ZN	GALV PIN	GOUPILLE GALV	SPLINT	
40	B01300355R	DISTANZIALE 40X54X20	SPACER	ENTRETOISE	ABSTANDSTUECK 40X54X20	
48	B030F0017R	GIUNTO MOLL.N. 26 ISO 12 B - 3	SPRING JOINT N.26 ISO 12 B-3	JOINT RESSORT	KUPPLUNGSSTUCK N. 26 ISO	
51	B0H000259R	RACCORDO M6X1 COMPLETO	FITTING OUT M6X1	RACCORD	KUPPLUNG M6X1	
52	B0H0P0029R	TUBETTO NYLON 4 L 180	NYLON HOSE	TUYAU EN NYLON	KLEINS ROHR AUS NYLON	

TAV_170

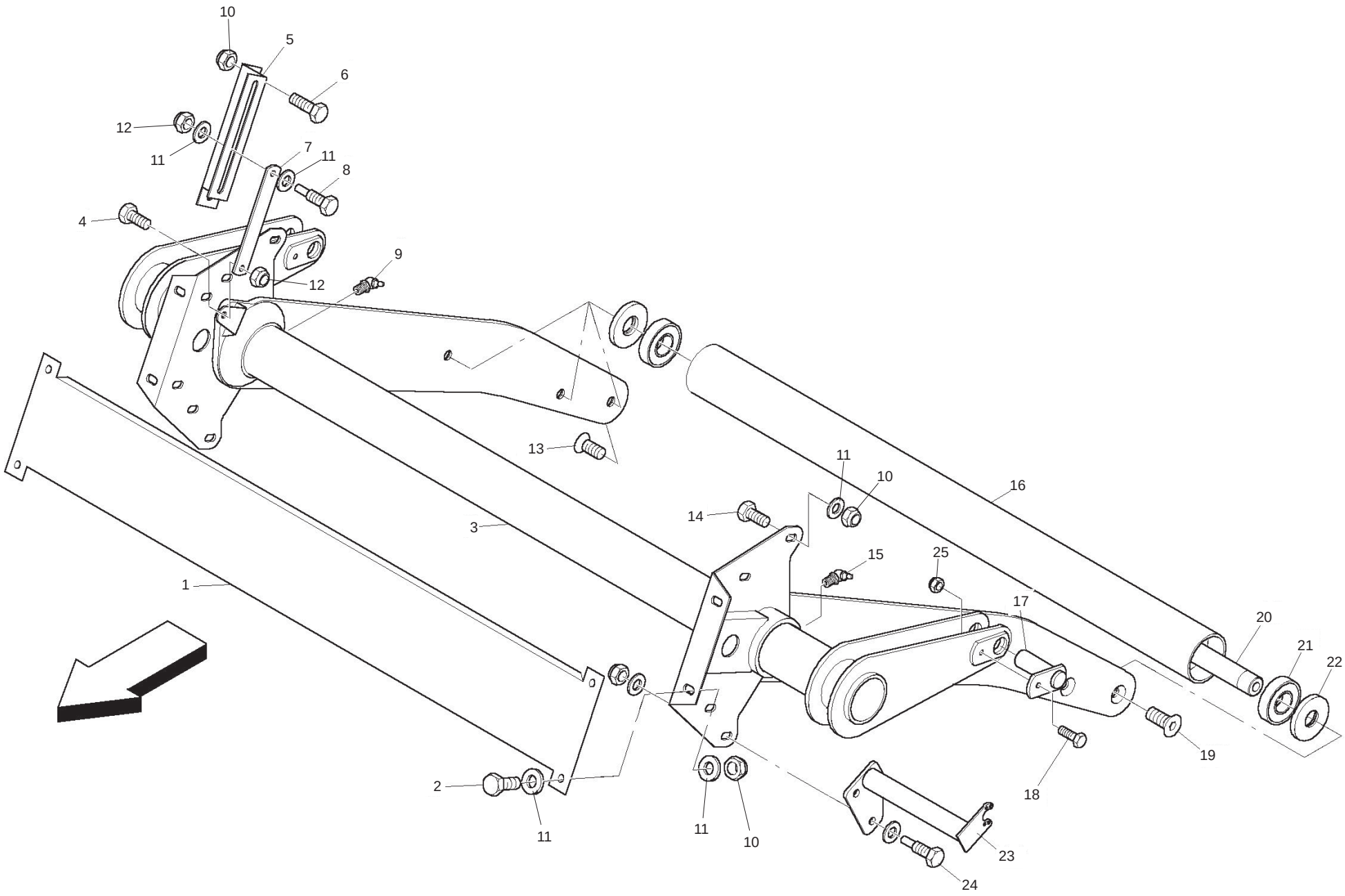
10
5
6
12
11
7
11
8
4
9
12
13
11
10
16
14
3
15
25
1
17
20
21
22
19
18
2
11
11
10
23
24

BILANCIERE
BELT TENSIONER ARM

TAV_170

Pos.	Cod.	Descrizione	Description	Description	Benennung	Descripcion
1	BSP000019R	COLLEGAMENTO ANTERIORE	CONNECTING THE FRONT			
2	F01020510R	VITE M12X1,75X30 U5739 8.8ZN	SCR. M12X1,75X30 U5739 8.8ZN	VIS M12X1,75X30 U5739 8.8ZN	SCHRAU.M12X1,75X30 U5739 8.8ZN	TORN. M12X1,75X30 U5739 8.8ZN
3	B07S00934R	BRACCIO TENDICINGHIA 180	BACKSTAND ARM 180	BRAS TENDEUR DE COURROIE	RIEMENSPANNER AULEGER 180	
4	F01020472R	VITE M10X1,5X25 U5739 8.8ZN	SCR. M10X1,5X25 U5739 8.8ZN	VIS M10X1,5X25 U5739 8.8 ZN	SCHRAUBE M10X1,5X25 U5739 8.8	TORNILLO 10X25 U5739 8.8 ZN
5	B0C002060R	PIASTRA DI SCORRIMENTO	SLIDING PLATE	PLAQUE DE CHEMINEMENT	GLEITFUHRUNG ANZEIGEHEBEL	
6	F01020508R	VITE M12X1,75X25 U5739 8.8ZN	SCR. M12X1,75X25 U5739 8.8ZN	VIS M12X1,75X25 U5739 8.8 ZN	SCHRAUBE M12X1,75X25U57398.8ZN	TORNIL.M12X1,75X25 U5739 8.8ZN
7	B0C002061R	BRACCIO SEGNALATORE	INDICATOR ARM	BRAS SIGNALEUR	ANZEIGEHEBEL	
8	B00500034R	VITE SEGNALATRICE	SCREW	VIS	SCHRAUBE	
9	F01100064R	ING.M10X1 7663-B 9SMNPB28 ZN	ING.M10X1 7663-B 9SMNPB28 ZN			
10	F01230213R	DADO M12X1,75 U7474 CL8 ZN	NUT M12X1,75 U7474 6SZN	ECROU AUTOBL. M12	SELBSTSPERR.MUTTER M12	DADO AUTOBL. M12
11	F01410076R	ROS.M12 13X 24X2,5 U6592 ZN	WASHER 12 13X 24X2,5 U6592 ZN	RONDEL. M12 13X24X2,5 U6592 ZN	SCHEIBE M12 13X24X2,5 U6592 ZN	ARANDELA M12 13 X24X2,5 ZN
12	F01230202R	DADO M10X 1,5 D985 8 ZN	NUT M10 D985	ECROU AUTOBL. M10	SELBSTSPERR.MUTTER M10	DADO AUTOBL. M10
13	F01030148R	VITE M16X2X35 U5933 10.9ZD	SCREW M16X2X35 U5933 10.9ZD	VIS M16X2X35 U5933 10.9ZD	SCHRAUBE M16X2X35 U5933 10.9ZD	TORNILLO M16X2X35 U5933 10.9ZD
14	F01020508R	VITE M12X1,75X25 U5739 8.8ZN	SCR. M12X1,75X25 U5739 8.8ZN	VIS M12X1,75X25 U5739 8.8 ZN	SCHRAUBE M12X1,75X25U57398.8ZN	TORNIL.M12X1,75X25 U5739 8.8ZN
15	F01100064R	ING.M10X1 7663-B 9SMNPB28 ZN	ING.M10X1 7663-B 9SMNPB28 ZN			
16	B03500165R	RULLO FOLLE	IDLE ROLLER	ROULEAU FOU	UMLENKWALZE	
17	B07S00936R	SPINA MARTINETTO PRESS.BALLA	JACK PIN	AXE VERIN	ZYLINDERBOLZEN	
18	F01020065R	VITE M 8X1,25X 30 U5737 8.8ZN	SCREW M 8X1,25X 30 U5737 8.8Z			
19	F01030148R	VITE M16X2X35 U5933 10.9ZD	SCREW M16X2X35 U5933 10.9ZD	VIS M16X2X35 U5933 10.9ZD	SCHRAUBE M16X2X35 U5933 10.9ZD	TORNILLO M16X2X35 U5933 10.9ZD
20	B03500213R	ALBERO CORTO	SHORT SHAFT	ARBRE COURT	KURZE WELLE	
21	F01010350R	VITE M12X1,25X 35 U5740 10.9ZF	BOLT M12X1,25X 35 U5740*10.9ZF			
22	B01300623R	CHIUSURA RULLI FOLLI	IDLE ROLLER LOCK	FERMETURE ROULEAUX FOUX	UMLENKWALZENVERSCHLUSS	
23	B07S01471R	SOSTEGNO POTENZIOMETRO	POTENTIOMETER SUPPORT	SUPPORT POTENTIOMETRE	POTENZIOMETERHALTERUNG	
24	B00440510R	VITE TSPEI M 5X 10-10.9 UNI 5	SCREW	VIS	SCHRAUBE TSPEI M5X 10-10.9	
25	B00920208R	DADO M8X1 D985 8ZN	NUT M8X1 D985 8ZN	ECROU	SELBSTSICHERNDE MUTTER M8-5S	

TAV_180

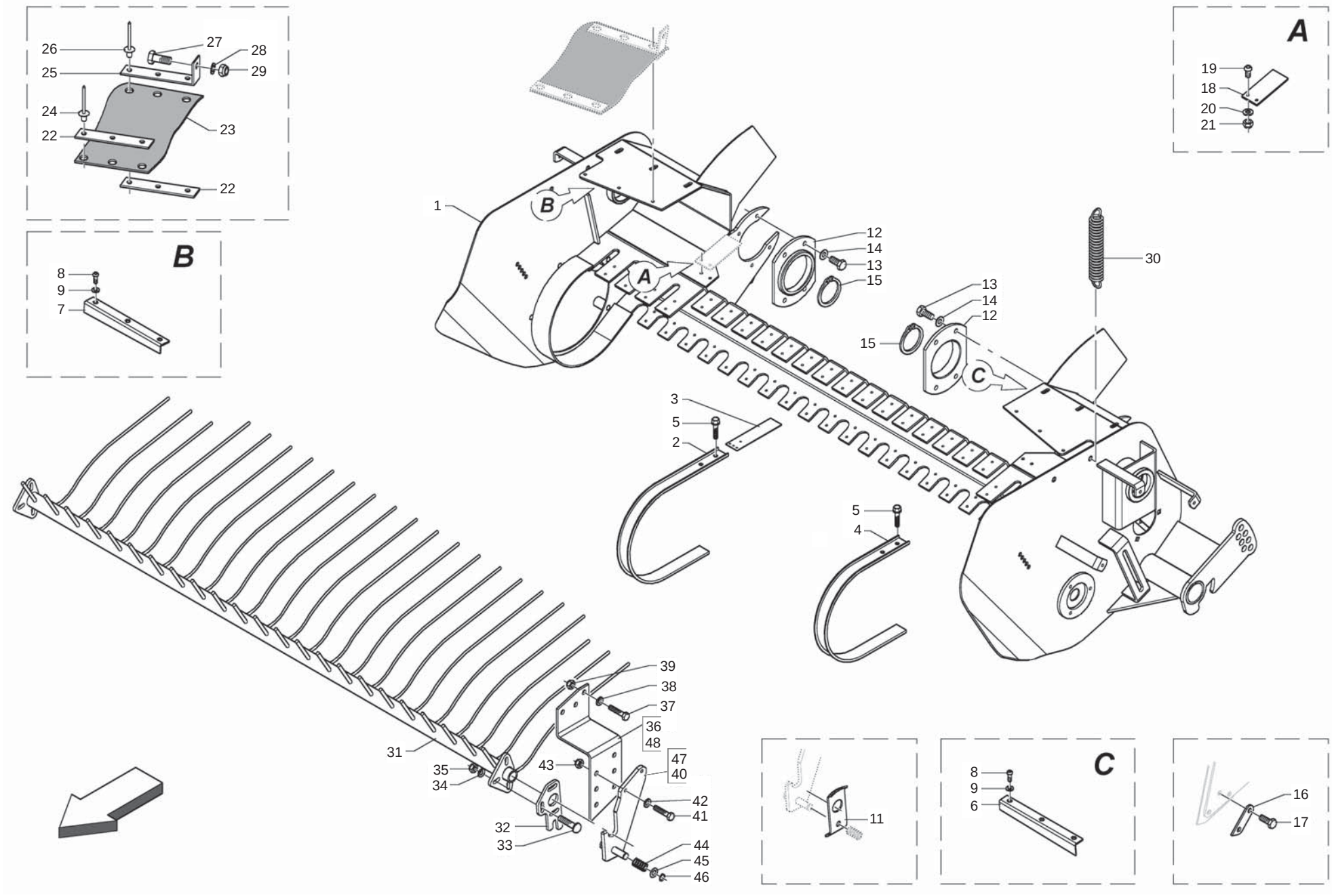

MASCHIO

cod. F07022343

PICK-UP M
PICK-UP M

TAV_180

Pos.	Cod.	Descrizione	Description	Description	Benennung	Descripcion
1	B07SP0219R	TELAIO PU M LT	FRAME PU M LT	CHASSIS PU LT	RAHMEN PU M LT	
2	B0C003304R	FASCIA CENTRALE PICK UP TOPCUT	PICK-UP CENTRAL BAND TOPCUT	BANDE CENTRALE PICK-UP TOPCUT	ZENTRALES PICK-UP BAND	
3	B0C002069R	COMPENSO FASCIA	BAND EXTENSION	EPAISSEUR BANDE	BANDVERLAENGERUNG	
4	B0C003183R	PLACA EXTENSIE LATERALA	LATERAL BAND PICK-UP	BANDE LATERALE	SEITENBAND	
5	F01170001R	VITE M 6X16 ZN SEZ.TRIL. U8111	SCREW			
6	B0C3P0015R	DEVIATORE SX COCLEA	AUGER LEFT SWITCH	COMMUTATEUR GAUCHE VIS	SCHALTER LINKS	
7	B0C3P0014R	DEVIATORE DX COCLEA	RIGHT AUGER SEPARATOR	COMMUTATEUR DROIT VIS	SCHALTER RECHTS	
8	F01030208R	VITE M 8X1,25X 20 U7380 10.9ZN	SCREW M8X1,25X20 U7380 10.9ZN			
9	F01420048R	ROS.M8 8,4X 24X 2 U6593 ZN	WASHER M8 8,4X 24X2 U6593 ZN	RONDELLE M8 8,4X24X 2 U6593 ZN	SCHEIBEN M8 8,4X24X 2 U6593 ZN	ARANDELA M8 8,4X 24X2 U6593 ZN
11	B0C000058R	AGGANCIO RASTRELLO	RAKE LINKAGE	ATTELAGE GRILLE RABATTEUR	NIEDERHALTERRECHENANSCHLUSS	
12	B01300715R	FLANGIA SX PICK-UP	PICK-UP FLANGE	FLASQUE GAUCHE POUR PICK-UP	PICK-UP FLANSCH	
13	B00181015R	VITE M10X1,5 X 16 U5739 8.8ZN	SCREW	VIS	SCHRAUBE	
14	F01410062R	ROS.M10 10,5X 18X 2 U6592 ZN	WASHER M10 10,5X 18X 2 U6592	RONDELLE M10 10,5X18X2 ZN	DICHTUNGSRING M10 10,5X18X2 ZN	RONDANA M10 10,5X18X2 ZN
15	B01700095R	ANEL. D ARR. ALB. 95-E UNI3653	SEEGER RING	BAGUE SEEGER	SEEGERRING 95-E	
16	B0C6P0039R	FERMO PICK-UP NORMALE	STANDARD PICK-UP LOCK	ARRET PICK-UP NORMAL		
17	F01020510R	VITE M12X1,75X30 U5739 8.8ZN	SCR. M12X1,75X30 U5739 8.8ZN	VIS M12X1,75X30 U5739 8.8ZN	SCHRAU.M12X1,75X30 U5739 8.8ZN	TORN. M12X1,75X30 U5739 8.8ZN
18	B0C004894R	COMPENSO PER PU NORMALE	PICK-UP SHIM	EPAISSEUR POUR PU NORMAL	PICK-UP AUSGLEICHSTUECK	
19	B00470620R	VITE TTEI M 6X 20-8.8 UNBRA	SCREW	VIS	SCHRAUBE TTEI M6X20-10.9	
20	F01410037R	ROS.M6 6,4X12,5X1,6 U6592 ZN	WASHER M6 6,4X12,5X1,6 U6592ZN	RONDEL.M6 6,4X12,5X1,6 U6592ZN	SCHEIB.M6 6,4X12,5X1,6 U6592ZN	ARAND.M6 6,4X12,5X1,6 U6592 ZN
21	B00920106R	DADO M6X1 D985 8ZN	NUT	ECROU	SELBSTSICHERNDE MUTTER M6-5S	
22	B0C1P0583R	PIATTINO DI FISSAGGIO	FIXING PLATE			
23	B07V00074R	PROT. COCLEA PU 180	AUGER PROTECTION	PROTECTION PELLETEUSE PU 180	SCHNECKENSCHUTZ	
24	B01000013R	RIVETTO STR. 6X18 U9200A AL	RIVET	RIVET	ABREISSNIETEN 6X18	
25	B0C002409R	SOSTEGNO GOMMA PUL	RUBBER SUPPORT	SUPPORT PNEUS	GUMMIHALTER	
26	B01000012R	RIVETTO STR. 6,4X22 ACCIAIO	RIVET	RIVET	ABREISSNIETEN 6X26	
27	F01020472R	VITE M10X1,5X25 U5739 8.8ZN	SCR. M10X1,5X25 U5739 8.8ZN	VIS M10X1,5X25 U5739 8.8 ZN	SCHRAUBE M10X1,5X25 U5739 8.8	TORNILLO 10X25 U5739 8.8 ZN
28	F01410062R	ROS.M10 10,5X 18X 2 U6592 ZN	WASHER M10 10,5X 18X 2 U6592	RONDELLE M10 10,5X18X2 ZN	DICHTUNGSRING M10 10,5X18X2 ZN	RONDANA M10 10,5X18X2 ZN
29	F01230202R	DADO M10X 1,5 D985 8 ZN	NUT M10 D985	ECROU AUTOBL. M10	SELBSTSPERR.MUTTER M10	DADO AUTOBL. M10
30	B01810412R	MOLLA	SPRING	RESSORT	FEDER	
31	B07SP0103R	RASTRELLO PER PU M LT	RAKE FOR PU M LT	GRILLE RABATTEUR POUR MU M LT	RAKE FUER PU M LT	
32	B0C003179R	AGGANCIO REGOLAZIONE	ADJUSTER ATTACHMENT	ACCROCHAGE REGLAGE	EINSTELLUNGSANKUPPLUNG	
33	B00523395R	VITE SPECIALE TTQST M12X45-8.8	SPECIAL SCREW	VIS SPECIALE	SCHRAUBE TTQST M12X 45-8.8	
34	B01522469R	RALLA 13 42 6	FIFTH WHEEL	BUTEE	SCHEIBE	
35	F01230213R	DADO M12X1,75 U7474 CL8 ZN	NUT M12X1,75 U7474 6SZN	ECROU AUTOBL. M12	SELBSTSPERR.MUTTER M12	DADO AUTOBL. M12
36	BSP000022R	ATTACCO SX RASTRELLO	LEFT RAKE CONNECTION			
37	F01020516R	VITE M12X1,75X45 U5739 8.8ZN	SCR. M12X1,75X45 U5739 8.8ZN	VIS M12X1,75X45 U5739 8.8 ZN	SCHARAUBE M12X1,75X45 U5739 ZN	TORNIL.M12X1,75X45 U5739 8.8ZN
38	B01421230R	ROS.M12 13X 20X2,0 U1749 ZN	WASHER	RONDELLE	SCHEIBE	
39	F01230213R	DADO M12X1,75 U7474 CL8 ZN	NUT M12X1,75 U7474 6SZN	ECROU AUTOBL. M12	SELBSTSPERR.MUTTER M12	DADO AUTOBL. M12
40	BSP000025R	ATTACCO SX RASTRELLO	LEFT RAKE CONNECTION			
41	F01020512R	VITE M12X1,75X35 U5739 8.8ZN	SCR. M12X1,75X35 U5739 8.8ZN	VIS M12X1,75X35 5739 8.8 ZN	SCHR. M12X1,75X35 5739 8.8 ZN	TORN. M12X1,75X35 5739 8.8 ZN
42	F01420120R	ROS.M12 13X36X2,5 U6593 ZN	WASHER M12 13X36X2,5 U6593 ZN	RONDELLE M12 13X36X2,5 ZN		
43	F01230213R	DADO M12X1,75 U7474 CL8 ZN	NUT M12X1,75 U7474 6SZN	ECROU AUTOBL. M12	SELBSTSPERR.MUTTER M12	DADO AUTOBL. M12
44	B01817605R	MOLLA C FILO 2,5 P24,5 L=60	SPRING	RESSORT	C-FEDER	
45	F01410124R	ROS.M20 21X 37X 3 U6592 ZN	WASHER M20 21X 37X 3 U6592 ZN	RONDEL.M20 21X37X3 ZN	MUTTER M20 21X 37X 3 U6592 ZN	ARANDELA M20 21X37X3 U6592 ZN
46	B01700020R	ANEL. D ARR. ALB. 20-E UNI3653	SEEGER RING	BAGUE SEEGER	SEEGERRING 20-E	
47	BSP000024R	ATTACCO DX RASTRELLO	RIGHT RAKE CONNECTION			
48	BSP000023R	ATTACCO DX RASTRELLO	RIGHT RAKE SUPPORT			

TAV_190

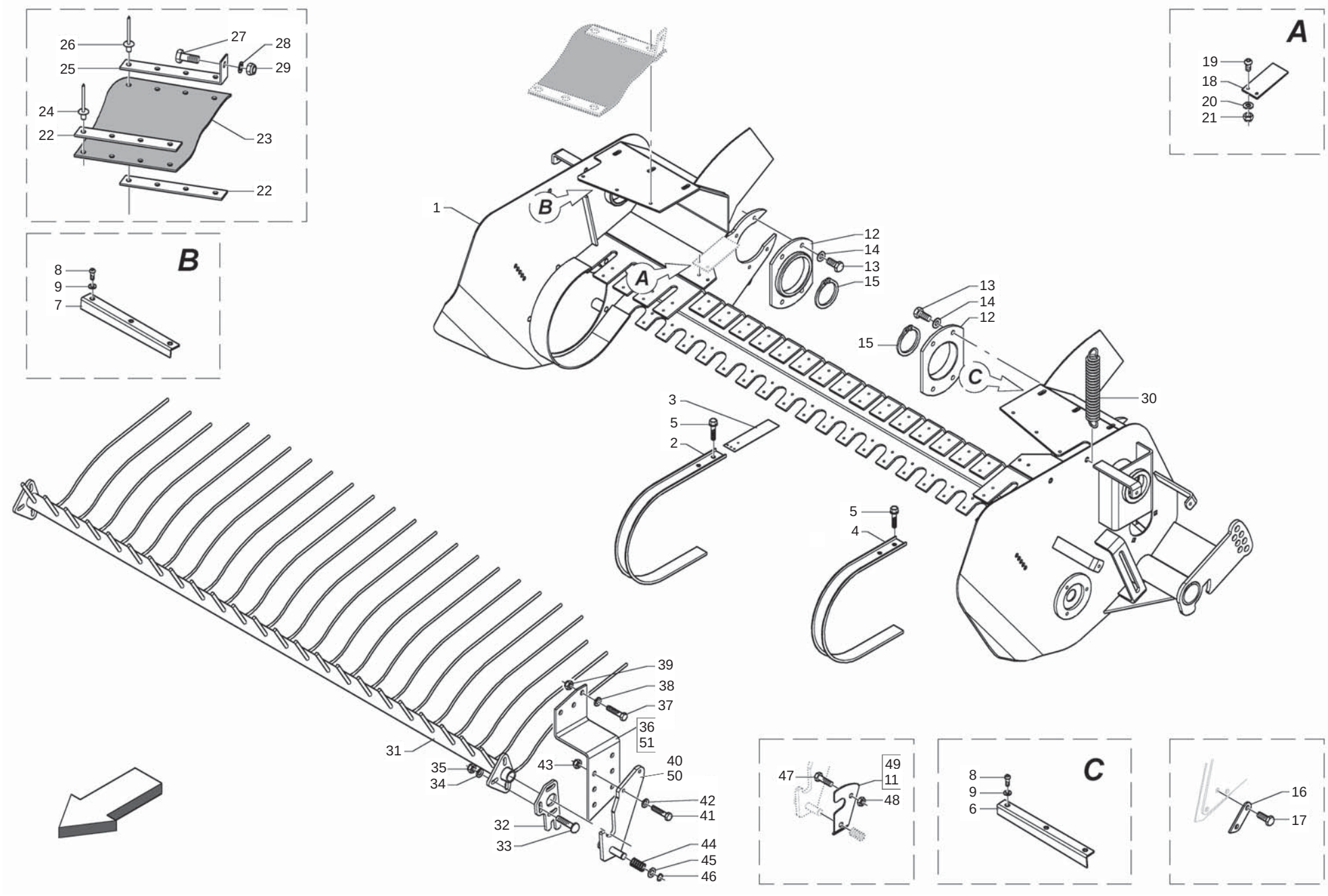

MASCHIO

cod. F07022343

PICK-UP L
PICK-UP L

TAV_190

Pos.	Cod.	Descrizione	Description	Description	Benennung	Descripcion
1	B07SP0193R	TELAIO PU L LT	FRAME PU LT	CHASSIS PU LT	RAHMEN PU L LT	
2	B0C003304R	FASCIA CENTRALE PICK UP TOPCUT	PICK-UP CENTRAL BAND TOPCUT	BANDE CENTRALE PICK-UP TOPCUT	ZENTRALES PICK-UP BAND	
3	B0C002069R	COMPENSO FASCIA	BAND EXTENSION	EPAISSEUR BANDE	BANDVERLAENGERUNG	
4	B0C003183R	PLACA EXTENSIE LATERALA	LATERAL BAND PICK-UP	BANDE LATERALE	SEITENBAND	
5	F01170001R	VITE M 6X16 ZN SEZ.TRIL. U8111	SCREW			
6	B0C3P0083R	DEVIATORE SX COCLEA PU L LT	RIGHT AUGER SEPARATOR	COMMUTATEUR DROIT VIS	SCHALTER LINKS PU L LT	
7	B0C3P0082R	DEVIATORE DX COCLEA PU L LT	RIGHT AUGER SEPARATOR	COMMUTATEUR DROIT VIS	SCHALTER RECHTS PU L LT	
8	F01030208R	VITE M 8X1,25X 20 U7380 10.9ZN	SCREW M8X1,25X20 U7380 10.9ZN			
9	F01420048R	ROS.M8 8,4X 24X 2 U6593 ZN	WASHER M8 8,4X 24X2 U6593 ZN	RONDELLE M8 8,4X24X 2 U6593 ZN	SCHEIBEN M8 8,4X24X 2 U6593 ZN	ARANDELA M8 8,4X 24X2 U6593 ZN
11	BSP000027R	STAFFA SX	LEFT BRACKET			
12	B01300715R	FLANGIA SX PICK-UP	PICK-UP FLANGE	FLASQUE GAUCHE POUR PICK-UP	PICK-UP FLANSCH	
13	B00181015R	VITE M10X1,5 X 16 U5739 8.8ZN	SCREW	VIS	SCHRAUBE	
14	F01410062R	ROS.M10 10,5X 18X 2 U6592 ZN	WASHER M10 10,5X 18X 2 U6592	RONDELLE M10 10,5X18X2 ZN	DICHTUNGSRING M10 10,5X18X2 ZN	RONDANA M10 10,5X18X2 ZN
15	B01700095R	ANEL. D ARR. ALB. 95-E UNI3653	SEEGER RING	BAGUE SEEGER	SEEGERRING 95-E	
16	B0C6P0039R	FERMO PICK-UP NORMALE	STANDARD PICK-UP LOCK	ARRET PICK-UP NORMAL		
17	F01020512R	VITE M12X1,75X35 U5739 8.8ZN	SCR. M12X1,75X35 U5739 8.8ZN	VIS M12X1,75X35 5739 8.8 ZN	SCHR. M12X1,75X35 5739 8.8 ZN	TORN. M12X1,75X35 5739 8.8 ZN
18	B0C004894R	COMPENSO PER PU NORMALE	PICK-UP SHIM	EPAISSEUR POUR PU NORMAL	PICK-UP AUSGLEICHSTUECK	
19	B00470620R	VITE TTEI M 6X 20-8.8 UNBRA	SCREW	VIS	SCHRAUBE TTEI M6X20-10.9	
20	F01410037R	ROS.M6 6,4X12,5X1,6 U6592 ZN	WASHER M6 6,4X12,5X1,6 U6592ZN	RONDEL.M6 6,4X12,5X1,6 U6592ZN	SCHEIB.M6 6,4X12,5X1,6 U6592ZN	ARAND.M6 6,4X12,5X1,6 U6592 ZN
21	B00920106R	DADO M6X1 D985 8ZN	NUT	ECROU	SELBSTSICHERNDE MUTTER M6-5S	
22	B0C003730R	FISSAGGIO GOMMA	FIXING PLATE	FIXAGE CAOUTCHOUC	GUMMIFIXIERPLATTE	
23	B07V00081R	PROT. COCLEA PU 200	AUGER GUARD	PROTECTION PELLETEUSE PU 200	SCHNECKENSCHUTZ	
24	B01000013R	RIVETTO STR. 6X18 U9200A AL	RIVET	RIVET	ABREISSNIETEN 6X18	
25	B0C003729R	SOSTEGNO GOMMA	RUBBER SUPPORT	SUPPORT CAOUTCHOUC	GUMMIHALTER	
26	B01000012R	RIVETTO STR. 6,4X22 ACCIAIO	RIVET	RIVET	ABREISSNIETEN 6X26	
27	F01020472R	VITE M10X1,5X25 U5739 8.8ZN	SCR. M10X1,5X25 U5739 8.8ZN	VIS M10X1,5X25 U5739 8.8 ZN	SCHRAUBE M10X1,5X25 U5739 8.8	TORNILLO 10X25 U5739 8.8 ZN
28	F01410062R	ROS.M10 10,5X 18X 2 U6592 ZN	WASHER M10 10,5X 18X 2 U6592	RONDELLE M10 10,5X18X2 ZN	DICHTUNGSRING M10 10,5X18X2 ZN	RONDANA M10 10,5X18X2 ZN
29	F01230202R	DADO M10X 1,5 D985 8 ZN	NUT M10 D985	ECROU AUTOBL. M10	SELBSTSPERR.MUTTER M10	DADO AUTOBL. M10
30	B01810412R	MOLLA	SPRING	RESSORT	FEDER	
31	B07SP0200R	RASTRELLO PU L LT	RAKE	RATEAU PU LT	HARKE PU L LT	
32	B0C003179R	AGGANCIO REGOLAZIONE	ADJUSTER ATTACHMENT	ACCROCHAGE REGLAGE	EINSTELLUNGSANKUPPLUNG	
33	B00523395R	VITE SPECIALE TTQST M12X45-8.8	SPECIAL SCREW	VIS SPECIALE	SCHRAUBE TTQST M12X 45-8.8	
34	B01522469R	RALLA 13 42 6	FIFTH WHEEL	BUTEE	SCHEIBE	
35	F01230213R	DADO M12X1,75 U7474 CL8 ZN	NUT M12X1,75 U7474 6SZN	ECROU AUTOBL. M12	SELBSTSPERR.MUTTER M12	DADO AUTOBL. M12
36	BSP000022R	ATTACCO SX RASTRELLO	LEFT RAKE CONNECTION			
37	F01020516R	VITE M12X1,75X45 U5739 8.8ZN	SCR. M12X1,75X45 U5739 8.8ZN	VIS M12X1,75X45 U5739 8.8 ZN	SCHARAUBE M12X1,75X45 U5739 ZN	TORNIL.M12X1,75X45 U5739 8.8ZN
38	B01421230R	ROS.M12 13X 20X2,0 U1749 ZN	WASHER	RONDELLE	SCHEIBE	
39	F01230213R	DADO M12X1,75 U7474 CL8 ZN	NUT M12X1,75 U7474 6SZN	ECROU AUTOBL. M12	SELBSTSPERR.MUTTER M12	DADO AUTOBL. M12
40	BSP000025R	ATTACCO SX RASTRELLO	LEFT RAKE CONNECTION			
41	F01020512R	VITE M12X1,75X35 U5739 8.8ZN	SCR. M12X1,75X35 U5739 8.8ZN	VIS M12X1,75X35 5739 8.8 ZN	SCHR. M12X1,75X35 5739 8.8 ZN	TORN. M12X1,75X35 5739 8.8 ZN
42	F01420120R	ROS.M12 13X36X2,5 U6593 ZN	WASHER M12 13X36X2,5 U6593 ZN	RONDELLE M12 13X36X2,5 ZN		
43	F01230213R	DADO M12X1,75 U7474 CL8 ZN	NUT M12X1,75 U7474 6SZN	ECROU AUTOBL. M12	SELBSTSPERR.MUTTER M12	DADO AUTOBL. M12
44	B01817605R	MOLLA C FILO 2,5 P24,5 L=60	SPRING	RESSORT	C-FEDER	
45	F01410124R	ROS.M20 21X 37X 3 U6592 ZN	WASHER M20 21X 37X 3 U6592 ZN	RONDEL.M20 21X37X3 ZN	MUTTER M20 21X 37X 3 U6592 ZN	ARANDELA M20 21X37X3 U6592 ZN
46	B01700020R	ANEL. D ARR. ALB. 20-E UNI3653	SEEGER RING	BAGUE SEEGER	SEEGERRING 20-E	
47	F01020562R	VITE M16X2X30 U5739 8.8ZN	SCR. M16X2X30 U5739 8.8ZN	VIS M16X2X30 U5739 8.8 ZN	SCHRAUBE M16X2X30 U5739 8.8 ZN	TORNILLO M16X2X30 U5739 8.8 ZN
48	F01200444R	DADO M16X2 U5589 CL8 ZN 6SZN	NUT M16X2 U5589 6SZN	ECROU M16X2	MUTTER M16X2	DADO M16X2
49	B0C003727R	AGGANCIO DX	RIGHT RAKE LINKAGE	ACCROCHAGE DROIT	RECHTER NIEDERHALTERRECHENANSC	
50	BSP000024R	ATTACCO DX RASTRELLO	RIGHT RAKE CONNECTION			
51	BSP000023R	ATTACCO DX RASTRELLO	RIGHT RAKE SUPPORT			

TAV_200

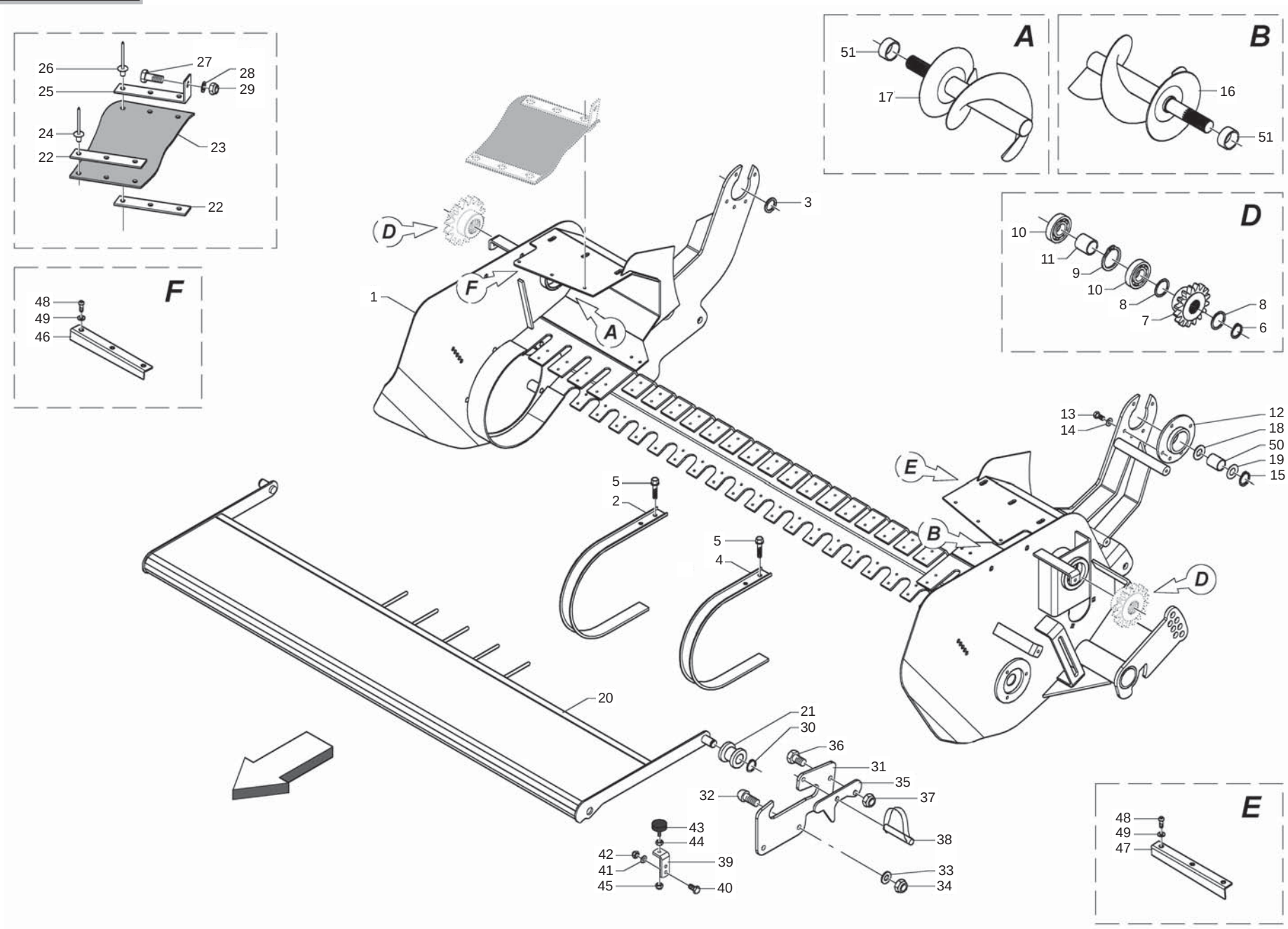
A
51
17
B
16
51
D
10
11
9
10
8
7
8
6
F
48
49
46
26
27
28
25
29
24
23
22
22
1
3
D
F
A
13
14
12
18
50
19
15
E
5
2
5
4
B
D
20
21
30
36
31
35
32
37
38
43
44
42
41
45
39
40
33
34
E
48
49
47

PICK-UP M CUT
PICK-UP M CUT

TAV_200

Pos.	Cod.	Descrizione	Description	Description	Benennung	Descripcion
1	B07SP0220R	TELAIO PU M CUT LT	FRAME PU M CUT LT	CHASSIS PU CUT LT	RAHMEN PU M CUT LT	
2	B0C003304R	FASCIA CENTRALE PICK UP TOPCUT	PICK-UP CENTRAL BAND TOPCUT	BANDE CENTRALE PICK-UP TOPCUT	ZENTRALES PICK-UP BAND	
3	B01300003R	RALLA ATTACCO PU	WASHER ATTACK PICK-UP			
4	B0C003183R	PLACA EXTENSIE LATERALA	LATERAL BAND PICK-UP	BANDE LATERALE	SEITENBAND	
5	F01170001R	VITE M 6X16 ZN SEZ.TRIL. U8111	SCREW			
6	B01700035R	ANEL. D ARR. ALB. 35-E UNI3653	SEEGER RING	BAGUE SEEGER	SEEGERRING 35-E	
7	B034P0005R	PIGNONE Z=13-3 4	PINION	PIGNON	RITZEL	
8	B01534416R	SPES. 35 43 1 ZINCATO	SHIM	ENTRETOISE	AUSGLEICHSCHEIBE 35X43X1	
9	B01710072R	ANEL. D ARR. FORO 72-I UNI3654	SEEGER RING	BAGUE SEEGER	SEEGERRING 72-I	
10	F04010178R	CUSC.D35 D72 B17 6207 2RS1 EX	BEAR.D35 D72 B17 6207 2RS1 EX	ROULEM. D35 D72 B17 6207 2RS1	LAGER D35 D72 B17 6207 2RS1	COJINETE D35 D72 6207 2RS1
11	B01300739R	DISTANZIALE 35X42X41	SPACER	ENTRETOISE	DISTANZSTUECK 35X42X41	
12	B01300649R	FLANGIA	FLANGE	FLASQUE	PICK-UP FLANSCH	
13	B00181015R	VITE M10X1,5 X 16 U5739 8.8ZN	SCREW	VIS	SCHRAUBE	
14	F01410062R	ROS.M10 10,5X 18X 2 U6592 ZN	WASHER M10 10,5X 18X 2 U6592	RONDELLE M10 10,5X18X2 ZN	DICHTUNGSRING M10 10,5X18X2 ZN	RONDANA M10 10,5X18X2 ZN
15	B01700045R	ANEL. D ARR. ALB. 45-E UNI3653	SEEGER RING	BAGUE SEEGER	SEEGERRING 45-E	
16	B07S01652R	COCLEA SX PU 200	LEFT PICK-UP AUGER 200	VIS GAUCHE PU 200	LINKE PICK-UP ZUBRINGERSCHNECK	
17	B07S01651R	COCLEA DX PU 200	RIGHT PICK-UP AUGER 200	VIS DROIT PU 200	RECHTE PICK-UP ZUBRINGERSCHNEC	
18	B01527654R	RALLA 45 62 4	FIFTH WHEEL	BUTEE	SCHEIBE	
19	B01547230R	SPES. 45 62 2	SHIM	ENTRETOISE	SCHEIBE	
20	B07S01849R	LAMIERA CONVOGLIAMENTO PU M	BAFFLE PLATE	TOLE DE TRANSPORT PU M	NIEDERHALTERBLECH	
21	B0C003712R	BOCCOLA	BUSH	COQUILLE	BUCHSE	
22	B0C1P0583R	PIATTINO DI FISSAGGIO	FIXING PLATE			
23	B07V00074R	PROT. COCLEA PU 180	AUGER PROTECTION	PROTECTION PELLETEUSE PU 180	SCHNECKENSCHUTZ	
24	B01000013R	RIVETTO STR. 6X18 U9200A AL	RIVET	RIVET	ABREISSNIETEN 6X18	
25	B0C002409R	SOSTEGNO GOMMA PUL	RUBBER SUPPORT	SUPPORT PNEUS	GUMMIHALTER	
26	B01000012R	RIVETTO STR. 6,4X22 ACCIAIO	RIVET	RIVET	ABREISSNIETEN 6X26	
27	F01020472R	VITE M10X1,5X25 U5739 8.8ZN	SCR. M10X1,5X25 U5739 8.8ZN	VIS M10X1,5X25 U5739 8.8 ZN	SCHRAUBE M10X1,5X25 U5739 8.8	TORNILLO 10X25 U5739 8.8 ZN
28	F01410062R	ROS.M10 10,5X 18X 2 U6592 ZN	WASHER M10 10,5X 18X 2 U6592	RONDELLE M10 10,5X18X2 ZN	DICHTUNGSRING M10 10,5X18X2 ZN	RONDANA M10 10,5X18X2 ZN
29	F01230202R	DADO M10X 1,5 D985 8 ZN	NUT M10 D985	ECROU AUTOBL. M10	SELBSTSPERR.MUTTER M10	DADO AUTOBL. M10
30	F02050101R	ANELLO E. DE 25X 1,2 U7435 C7	SEEGER RING E. 25X1,2 7435 C70	SEEGER E. 25X 1,2 U7435 C70	SEEGERING E. 25X 1,2 U7435 C70	ANILLO E. 25X 1,2 U7435 C70
31	B0C100017R	ATTACCO LAMIERA CONVOGLIAMENTO	CONVEYOR PLATE ATTACHMENT	ATTELAGE TOLE D ACHEMINEMENT	ZUFUEHRBLECHBEFESTIGUNG	
32	B00471230R	VITE TTEI M12X 30-8.8 UNBRA	SCREW	VIS	SCHRAUBE TTEI M12X 30-8.8	
33	B01421230R	ROS.M12 13X 20X2,0 U1749 ZN	WASHER	RONDELLE	SCHEIBE	
34	F01230213R	DADO M12X1,75 U7474 CL8 ZN	NUT M12X1,75 U7474 6SZN	ECROU AUTOBL. M12	SELBSTSPERR.MUTTER M12	DADO AUTOBL. M12
35	B0C004002R	GANCIO	HOOK	CROCHET	HAKEN	
36	F01020510R	VITE M12X1,75X30 U5739 8.8ZN	SCR. M12X1,75X30 U5739 8.8ZN	VIS M12X1,75X30 U5739 8.8ZN	SCHRAU.M12X1,75X30 U5739 8.8ZN	TORN. M12X1,75X30 U5739 8.8ZN
37	F01230213R	DADO M12X1,75 U7474 CL8 ZN	NUT M12X1,75 U7474 6SZN	ECROU AUTOBL. M12	SELBSTSPERR.MUTTER M12	DADO AUTOBL. M12
38	B01000021R	SPINOTTO PER MOTOZAPPA 10X45	PIN	EPINE	STIFT	
39	B0C005187R	ATTACCO TAMPONE	PLUG ATTACHMENT	ATTELAGE TAMPON	PROPFENBEFESTIGUNG	
40	F01020476R	VITE M10X1,5X30 U5739 8.8ZN	SCR. M10X1,5X30 U5739 8.8ZN	VIS M10X1,5X30 U5739 8.8 ZN	SCHRAUBE M10X1,5X30U5739 8.8ZN	TORNIL.M10X1,5X30 U5739 8.8 ZN
41	F01410062R	ROS.M10 10,5X 18X 2 U6592 ZN	WASHER M10 10,5X 18X 2 U6592	RONDELLE M10 10,5X18X2 ZN	DICHTUNGSRING M10 10,5X18X2 ZN	RONDANA M10 10,5X18X2 ZN
42	F01230202R	DADO M10X 1,5 D985 8 ZN	NUT M10 D985	ECROU AUTOBL. M10	SELBSTSPERR.MUTTER M10	DADO AUTOBL. M10
43	B07049749R	TAMPONE 50X21 M10	BUMPER 50X21 M10	TAMPON 50X21 M10	PUFFER 50X21 M10	
44	B00710310R	DADO M10X1,25 U5588 6S ZN	NUT	ECROU	MUTTER M10-6S	
45	F01230202R	DADO M10X 1,5 D985 8 ZN	NUT M10 D985	ECROU AUTOBL. M10	SELBSTSPERR.MUTTER M10	DADO AUTOBL. M10
46	B0C3P0014R	DEVIATORE DX COCLEA	RIGHT AUGER SEPARATOR	COMMUTATEUR DROIT VIS	SCHALTER RECHTS	
47	B0C3P0015R	DEVIATORE SX COCLEA	AUGER LEFT SWITCH	COMMUTATEUR GAUCHE VIS	SCHALTER LINKS	
48	F01030208R	VITE M 8X1,25X 20 U7380 10.9ZN	SCREW M8X1,25X20 U7380 10.9ZN			
49	F01420048R	ROS.M8 8,4X 24X 2 U6593 ZN	WASHER M8 8,4X 24X2 U6593 ZN	RONDELLE M8 8,4X24X 2 U6593 ZN	SCHEIBEN M8 8,4X24X 2 U6593 ZN	ARANDELA M8 8,4X 24X2 U6593 ZN
50	B02500010R	BRONZINA 45 53 25	BUSHING	COUSSINET	BRONZEBUCHSE 45 53 25	
51	B01300046R	DISTANZIALE 35,2X42,4X15	SPACER	ENTRETOISE	DISTANZSTUECK 35,2X42,4X15	

TAV_210

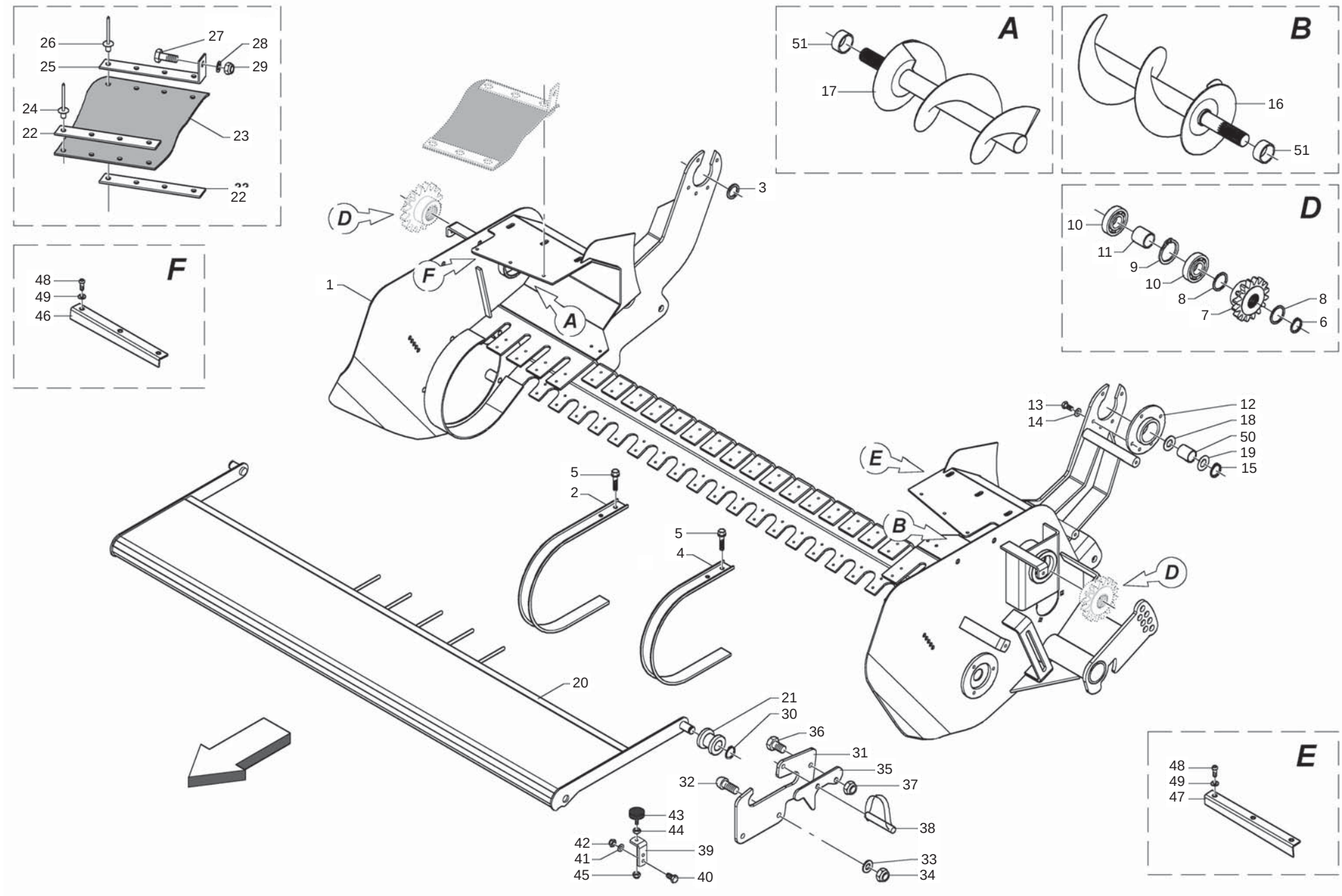

MASCHIO

cod. F07022343

PICK-UP L CUT
PICK-UP L CUT

TAV_210

Pos.	Cod.	Descrizione	Description	Description	Benennung	Descripcion
1	B07SP0201R	TELAIO PU L LTC	FRAME PU LTC	CHASSIS PU LTC	RAHMEN PU L LTC	
2	B0C003304R	FASCIA CENTRALE PICK UP TOPCUT	PICK-UP CENTRAL BAND TOPCUT	BANDE CENTRALE PICK-UP TOPCUT	ZENTRALES PICK-UP BAND	
3	B01300003R	RALLA ATTACCO PU	WASHER ATTACK PICK-UP			
4	B0C003183R	PLACA EXTENSIE LATERALA	LATERAL BAND PICK-UP	BANDE LATERALE	SEITENBAND	
5	F01170001R	VITE M 6X16 ZN SEZ.TRIL. U8111	SCREW			
6	B01700035R	ANEL. D ARR. ALB. 35-E UNI3653	SEEGER RING	BAGUE SEEGER	SEEGERRING 35-E	
7	B034P0005R	PIGNONE Z=13-3 4	PINION	PIGNON	RITZEL	
8	B01534416R	SPES. 35 43 1 ZINCATO	SHIM	ENTRETOISE	AUSGLEICHSCHEIBE 35X43X1	
9	B01710072R	ANEL. D ARR. FORO 72-I UNI3654	SEEGER RING	BAGUE SEEGER	SEEGERRING 72-I	
10	F04010178R	CUSC.D35 D72 B17 6207 2RS1 EX	BEAR.D35 D72 B17 6207 2RS1 EX	ROULEM. D35 D72 B17 6207 2RS1	LAGER D35 D72 B17 6207 2RS1	COJINETE D35 D72 6207 2RS1
11	B01300739R	DISTANZIALE 35X42X41	SPACER	ENTRETOISE	DISTANZSTUECK 35X42X41	
12	B01300649R	FLANGIA	FLANGE	FLASQUE	PICK-UP FLANSCH	
13	B00181015R	VITE M10X1,5 X 16 U5739 8.8ZN	SCREW	VIS	SCHRAUBE	
14	F01410062R	ROS.M10 10,5X 18X 2 U6592 ZN	WASHER M10 10,5X 18X 2 U6592	RONDELLE M10 10,5X18X2 ZN	DICHTUNGSRING M10 10,5X18X2 ZN	RONDANA M10 10,5X18X2 ZN
15	B01700045R	ANEL. D ARR. ALB. 45-E UNI3653	SEEGER RING	BAGUE SEEGER	SEEGERRING 45-E	
16	B07S01654R	COCLEA SX PU 220	LEFT PICK-UP AUGER 220	VIS GAUCHE PU 220	LINKE PICK-UP ZUBRINGERSCHNECK	
17	B07S01653R	COCLEA DX PU 220	RIGHT PICK-UP AUGER 220	VIS DROIT PU 220	RECHTE PICK-UP ZUBRINGERSCHNEC	
18	B01527654R	RALLA 45 62 4	FIFTH WHEEL	BUTEE	SCHEIBE	
19	B01547230R	SPES. 45 62 2	SHIM	ENTRETOISE	SCHEIBE	
20	B07S01848R	LAMIERA CONVOGLIAMENTO PU L	WIDE PICK-UP BAFFLE PLATE	TOLE DE TRANSPORT PU L	WEITE PICK-UP NIEDERHALTERBLEC	
21	B0C003712R	BOCCOLA	BUSH	COQUILLE	BUCHSE	
22	B0C003730R	FISSAGGIO GOMMA	FIXING PLATE	FIXAGE CAOUTCHOUC	GUMMIFIXIERPLATTE	
23	B07V00081R	PROT. COCLEA PU 200	AUGER GUARD	PROTECTION PELLETEUSE PU 200	SCHNECKENSCHUTZ	
24	B01000013R	RIVETTO STR. 6X18 U9200A AL	RIVET	RIVET	ABREISSNIETEN 6X18	
25	B0C003729R	SOSTEGNO GOMMA	RUBBER SUPPORT	SUPPORT CAOUTCHOUC	GUMMIHALTER	
26	B01000012R	RIVETTO STR. 6,4X22 ACCIAIO	RIVET	RIVET	ABREISSNIETEN 6X26	
27	F01020472R	VITE M10X1,5X25 U5739 8.8ZN	SCR. M10X1,5X25 U5739 8.8ZN	VIS M10X1,5X25 U5739 8.8 ZN	SCHRAUBE M10X1,5X25 U5739 8.8	TORNILLO 10X25 U5739 8.8 ZN
28	F01410062R	ROS.M10 10,5X 18X 2 U6592 ZN	WASHER M10 10,5X 18X 2 U6592	RONDELLE M10 10,5X18X2 ZN	DICHTUNGSRING M10 10,5X18X2 ZN	RONDANA M10 10,5X18X2 ZN
29	F01230202R	DADO M10X 1,5 D985 8 ZN	NUT M10 D985	ECROU AUTOBL. M10	SELBSTSPERR.MUTTER M10	DADO AUTOBL. M10
30	F02050101R	ANELLO E. DE 25X 1,2 U7435 C7	SEEGER RING E. 25X1,2 7435 C70	SEEGER E. 25X 1,2 U7435 C70	SEEGERING E. 25X 1,2 U7435 C70	ANILLO E. 25X 1,2 U7435 C70
31	B0C100017R	ATTACCO LAMIERA CONVOGLIAMENTO	CONVEYOR PLATE ATTACHMENT	ATTELAGE TOLE D ACHEMINEMENT	ZUFUEHRBLECHBEFESTIGUNG	
32	B00471230R	VITE TTEI M12X 30-8.8 UNBRA	SCREW	VIS	SCHRAUBE TTEI M12X 30-8.8	
33	B01421230R	ROS.M12 13X 20X2,0 U1749 ZN	WASHER	RONDELLE	SCHEIBE	
34	F01230213R	DADO M12X1,75 U7474 CL8 ZN	NUT M12X1,75 U7474 6SZN	ECROU AUTOBL. M12	SELBSTSPERR.MUTTER M12	DADO AUTOBL. M12
35	B0C004002R	GANCIO	HOOK	CROCHET	HAKEN	
36	F01020510R	VITE M12X1,75X30 U5739 8.8ZN	SCR. M12X1,75X30 U5739 8.8ZN	VIS M12X1,75X30 U5739 8.8ZN	SCHRAU.M12X1,75X30 U5739 8.8ZN	TORN. M12X1,75X30 U5739 8.8ZN
37	F01230213R	DADO M12X1,75 U7474 CL8 ZN	NUT M12X1,75 U7474 6SZN	ECROU AUTOBL. M12	SELBSTSPERR.MUTTER M12	DADO AUTOBL. M12
38	B01000021R	SPINOTTO PER MOTOZAPPA 10X45	PIN	EPINE	STIFT	
39	B0C005187R	ATTACCO TAMPONE	PLUG ATTACHMENT	ATTELAGE TAMPON	PROPFENBEFESTIGUNG	
40	F01020476R	VITE M10X1,5X30 U5739 8.8ZN	SCR. M10X1,5X30 U5739 8.8ZN	VIS M10X1,5X30 U5739 8.8 ZN	SCHRAUBE M10X1,5X30U5739 8.8ZN	TORNIL.M10X1,5X30 U5739 8.8 ZN
41	F01410062R	ROS.M10 10,5X 18X 2 U6592 ZN	WASHER M10 10,5X 18X 2 U6592	RONDELLE M10 10,5X18X2 ZN	DICHTUNGSRING M10 10,5X18X2 ZN	RONDANA M10 10,5X18X2 ZN
42	F01230202R	DADO M10X 1,5 D985 8 ZN	NUT M10 D985	ECROU AUTOBL. M10	SELBSTSPERR.MUTTER M10	DADO AUTOBL. M10
43	B07049749R	TAMPONE 50X21 M10	BUMPER 50X21 M10	TAMPON 50X21 M10	PUFFER 50X21 M10	
44	B00710310R	DADO M10X1,25 U5588 6S ZN	NUT	ECROU	MUTTER M10-6S	
45	F01230202R	DADO M10X 1,5 D985 8 ZN	NUT M10 D985	ECROU AUTOBL. M10	SELBSTSPERR.MUTTER M10	DADO AUTOBL. M10
46	B0C3P0082R	DEVIATORE DX COCLEA PU L LT	RIGHT AUGER SEPARATOR	COMMUTATEUR DROIT VIS	SCHALTER RECHTS PU L LT	
47	B0C3P0083R	DEVIATORE SX COCLEA PU L LT	RIGHT AUGER SEPARATOR	COMMUTATEUR DROIT VIS	SCHALTER LINKS PU L LT	
48	F01030208R	VITE M 8X1,25X 20 U7380 10.9ZN	SCREW M8X1,25X20 U7380 10.9ZN			
49	F01420048R	ROS.M8 8,4X 24X 2 U6593 ZN	WASHER M8 8,4X 24X2 U6593 ZN	RONDELLE M8 8,4X24X 2 U6593 ZN	SCHEIBEN M8 8,4X24X 2 U6593 ZN	ARANDELA M8 8,4X 24X2 U6593 ZN
50	B02500010R	BRONZINA 45 53 25	BUSHING	COUSSINET	BRONZEBUCHSE 45 53 25	
51	B01300046R	DISTANZIALE 35,2X42,4X15	SPACER	ENTRETOISE	DISTANZSTUECK 35,2X42,4X15	

TAV_220

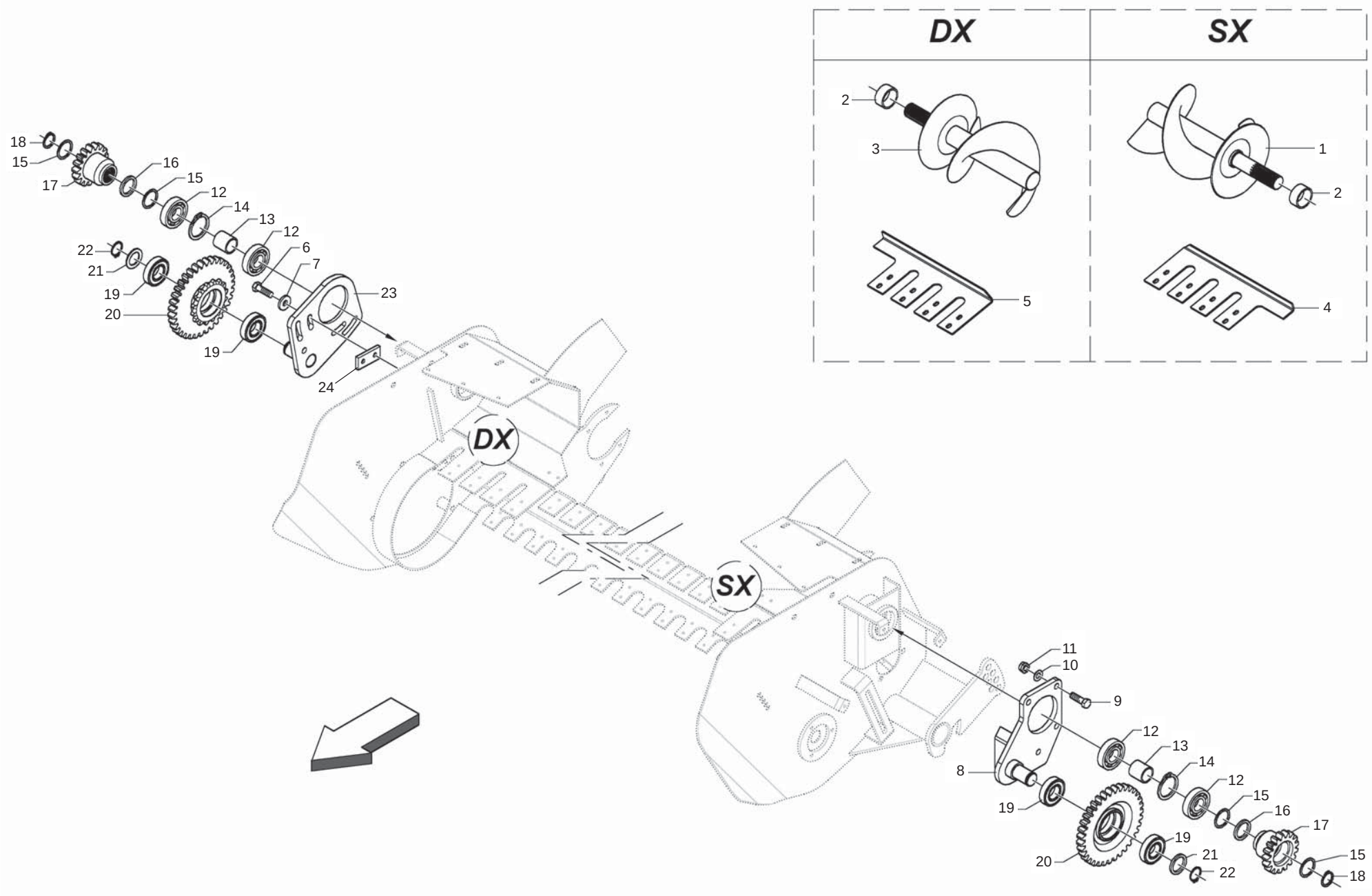

MASCHIO

cod. F07022343

COCLEE PICK-UP M
AUGER PICK-UP M

TAV_220

Pos.	Cod.	Descrizione	Description	Description	Benennung	Descripcion
1	B07S01652R	COCLEA SX PU 200	LEFT PICK-UP AUGER 200	VIS GAUCHE PU 200	LINKE PICK-UP ZUBRINGERSCHNECK	
2	B01300046R	DISTANZIALE 35,2X42,4X15	SPACER	ENTRETOISE	DISTANZSTUECK 35,2X42,4X15	
3	B07S01651R	COCLEA DX PU 200	RIGHT PICK-UP AUGER 200	VIS DROIT PU 200	RECHTE PICK-UP ZUBRINGERSCHNEC	
4	B0C3P0102R	GUIDA COCLEA SX PU M LT	AUGER GUIDE	GUIDE PALLETEUSE	SCHNECKENFOERDERER FUEHRUNG LI	
5	B0C3P0101R	GUIDA COCLEA DX PU M LT	AUGER GUIDE	GUIDE PALLETEUSE	SCHNECKENFOERDERER FUEHRUNG RE	
6	F01020152R	VITE M12X1,75X40 U5737 8.8ZN	SCR. M12X1,75X40 U5737 8.8ZN	VIS M12X1,75X40 U5737 8.8 ZN	SCHRAUBE M12X1,75X40U57378.8ZN	TORNIL.M12X1,75X40 U5737 8.8ZN
7	B01516038R	RALLA 13 32 5	FIFTH WHEEL	BUTEE	SCHEIBE	
8	B07SP0238R	PIASTRA SX	PLATE LINK SIDE	PLAQUE COTE GAUCHE	PLATTE LINKS	
9	F01020152R	VITE M12X1,75X40 U5737 8.8ZN	SCR. M12X1,75X40 U5737 8.8ZN	VIS M12X1,75X40 U5737 8.8 ZN	SCHRAUBE M12X1,75X40U57378.8ZN	TORNIL.M12X1,75X40 U5737 8.8ZN
10	B01421230R	ROS.M12 13X 20X2,0 U1749 ZN	WASHER	RONDELLE	SCHEIBE	
11	F01230213R	DADO M12X1,75 U7474 CL8 ZN	NUT M12X1,75 U7474 6SZN	ECROU AUTOBL. M12	SELBSTSPERR.MUTTER M12	DADO AUTOBL. M12
12	F04010178R	CUSC.D35 D72 B17 6207 2RS1 EX	BEAR.D35 D72 B17 6207 2RS1 EX	ROULEM. D35 D72 B17 6207 2RS1	LAGER D35 D72 B17 6207 2RS1	COJINETE D35 D72 6207 2RS1
13	B01300739R	DISTANZIALE 35X42X41	SPACER	ENTRETOISE	DISTANZSTUECK 35X42X41	
14	B01710072R	ANEL. D ARR. FORO 72-I UNI3654	SEEGER RING	BAGUE SEEGER	SEEGERRING 72-I	
15	B01534416R	SPES. 35 43 1 ZINCATO	SHIM	ENTRETOISE	AUSGLEICHSCHEIBE 35X43X1	
16	B013P0133R	RALLA 35 45 5	FIFTH WHEEL 35 45 5	BUTEE 35 45 5	DISTANZSCHEIBE 35 45 5	
17	B034P0048R	INGRANAGGIO Z=17 M=5	GEAR Z=17 M=5	ENGRANAGE Z=17 M=5	ZAHNRADPAAR Z=17 M=5	
18	B01700035R	ANEL. D ARR. ALB. 35-E UNI3653	SEEGER RING	BAGUE SEEGER	SEEGERRING 35-E	
19	B02043016R	CUSC. 6206-2RS CAT.B-ST004	BEARING	ROULEMENT	LAGER	
20	B034P0049R	INGR. Z=35 M=5 WITH SPROCKET Z	GEAR Z=35 M=5 WITH SPROCKET Z=	PINION Z=16 3 4 ET ENGRANAGE Z	RITZEL Z=16 3 4 UND ZAHNRADPAA	
21	B013P0130R	RALLA 30 45 3	FIFTH WHEEL 30 45 3	BUTEE 30 45 3	DISTANZSCHEIBE 30 45 3	
22	F02050112R	ANELLO E.DE 30X 1,5 U7435 ZN	SEEGER RING 30X 1,5 U7435 C70	SEEGER E. 30 X 1,5 U7435 C70	SEEGERING E. 30X 1,5 U7435 C70	ANILLO E. 30 X 1,5 U7435 C70
23	B07SP0239R	PIASTRA DX	PLATE RIGHT SIDE	PLAQUE COTE DROIT	PLATTE RECHTS	
24	B0C003172R	ATTACCO TENDICATENA	CHAIN TIGHTENER COUPLING	ATTELAGE TENDEUR DE CHAINE	KETTENSPANNER BEFESTIGUNG	

TAV_230

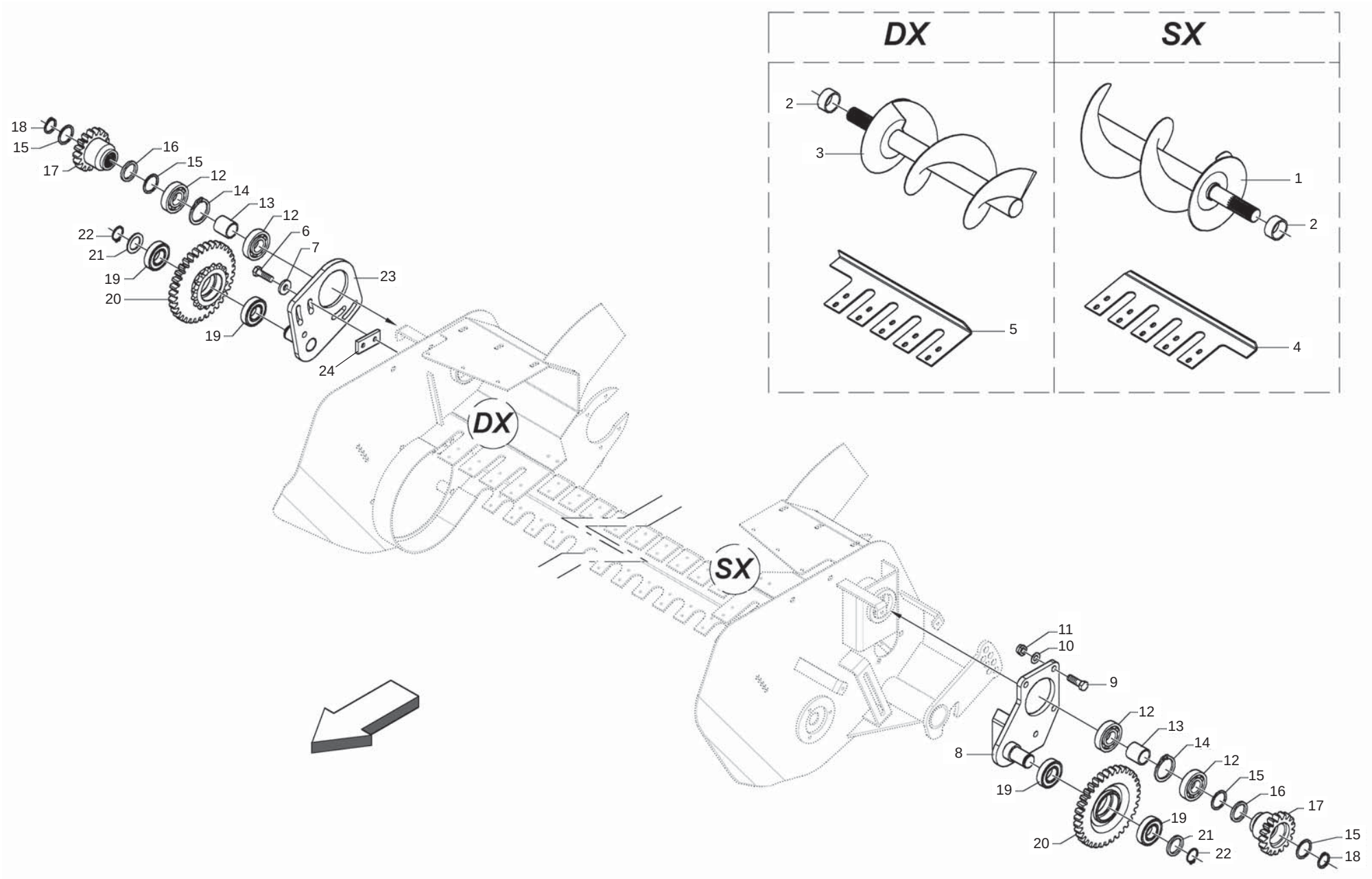

MASCHIO

cod. F07022343

COCLEE PICK-UP L
AUGER PICK-UP L

TAV_230

Pos.	Cod.	Descrizione	Description	Description	Benennung	Descripcion
1	B07S01654R	COCLEA SX PU 220	LEFT PICK-UP AUGER 220	VIS GAUCHE PU 220	LINKE PICK-UP ZUBRINGERSCHNECK	
2	B01300046R	DISTANZIALE 35,2X42,4X15	SPACER	ENTRETOISE	DISTANZSTUECK 35,2X42,4X15	
3	B07S01653R	COCLEA DX PU 220	RIGHT PICK-UP AUGER 220	VIS DROIT PU 220	RECHTE PICK-UP ZUBRINGERSCHNEC	
4	B0C3P0100R	GUIDA COCLEA SX PU L LT	AUGER GUIDE LEFT SIDE	GUIDE PALLETEUSE COTE GAUCHE	SCHNECKENFOERDERER FUEHRUNG LI	
5	B0C3P0099R	GUIDA COCLEA DX PU L LT	AUGER GUIDE RIGHT SIDE	GUIDE PALLETEUSE COTE DROIT	SCHNECKENFOERDERER FUEHRUNG RE	
6	F01020152R	VITE M12X1,75X40 U5737 8.8ZN	SCR. M12X1,75X40 U5737 8.8ZN	VIS M12X1,75X40 U5737 8.8 ZN	SCHRAUBE M12X1,75X40U57378.8ZN	TORNIL.M12X1,75X40 U5737 8.8ZN
7	B01516038R	RALLA 13 32 5	FIFTH WHEEL	BUTEE	SCHEIBE	
8	B07SP0238R	PIASTRA SX	PLATE LINK SIDE	PLAQUE COTE GAUCHE	PLATTE LINKS	
9	F01020152R	VITE M12X1,75X40 U5737 8.8ZN	SCR. M12X1,75X40 U5737 8.8ZN	VIS M12X1,75X40 U5737 8.8 ZN	SCHRAUBE M12X1,75X40U57378.8ZN	TORNIL.M12X1,75X40 U5737 8.8ZN
10	B01421230R	ROS.M12 13X 20X2,0 U1749 ZN	WASHER	RONDELLE	SCHEIBE	
11	F01230213R	DADO M12X1,75 U7474 CL8 ZN	NUT M12X1,75 U7474 6SZN	ECROU AUTOBL. M12	SELBSTSPERR.MUTTER M12	DADO AUTOBL. M12
12	F04010178R	CUSC.D35 D72 B17 6207 2RS1 EX	BEAR.D35 D72 B17 6207 2RS1 EX	ROULEM. D35 D72 B17 6207 2RS1	LAGER D35 D72 B17 6207 2RS1	COJINETE D35 D72 6207 2RS1
13	B01300739R	DISTANZIALE 35X42X41	SPACER	ENTRETOISE	DISTANZSTUECK 35X42X41	
14	B01710072R	ANEL. D ARR. FORO 72-I UNI3654	SEEGER RING	BAGUE SEEGER	SEEGERRING 72-I	
15	B01534416R	SPES. 35 43 1 ZINCATO	SHIM	ENTRETOISE	AUSGLEICHSCHEIBE 35X43X1	
16	B013P0133R	RALLA 35 45 5	FIFTH WHEEL 35 45 5	BUTEE 35 45 5	DISTANZSCHEIBE 35 45 5	
17	B034P0048R	INGRANAGGIO Z=17 M=5	GEAR Z=17 M=5	ENGRANAGE Z=17 M=5	ZAHNRADPAAR Z=17 M=5	
18	B01700035R	ANEL. D ARR. ALB. 35-E UNI3653	SEEGER RING	BAGUE SEEGER	SEEGERRING 35-E	
19	B02043016R	CUSC. 6206-2RS CAT.B-ST004	BEARING	ROULEMENT	LAGER	
20	B034P0049R	INGR. Z=35 M=5 WITH SPROCKET Z	GEAR Z=35 M=5 WITH SPROCKET Z=	PINION Z=16 3 4 ET ENGRANAGE Z	RITZEL Z=16 3 4 UND ZAHNRADPAA	
21	B013P0130R	RALLA 30 45 3	FIFTH WHEEL 30 45 3	BUTEE 30 45 3	DISTANZSCHEIBE 30 45 3	
22	F02050112R	ANELLO E.DE 30X 1,5 U7435 ZN	SEEGER RING 30X 1,5 U7435 C70	SEEGER E. 30 X 1,5 U7435 C70	SEEGERING E. 30X 1,5 U7435 C70	ANILLO E. 30 X 1,5 U7435 C70
23	B07SP0239R	PIASTRA DX	PLATE RIGHT SIDE	PLAQUE COTE DROIT	PLATTE RECHTS	
24	B0C003172R	ATTACCO TENDICATENA	CHAIN TIGHTENER COUPLING	ATTELAGE TENDEUR DE CHAINE	KETTENSPANNER BEFESTIGUNG	

TAV_240

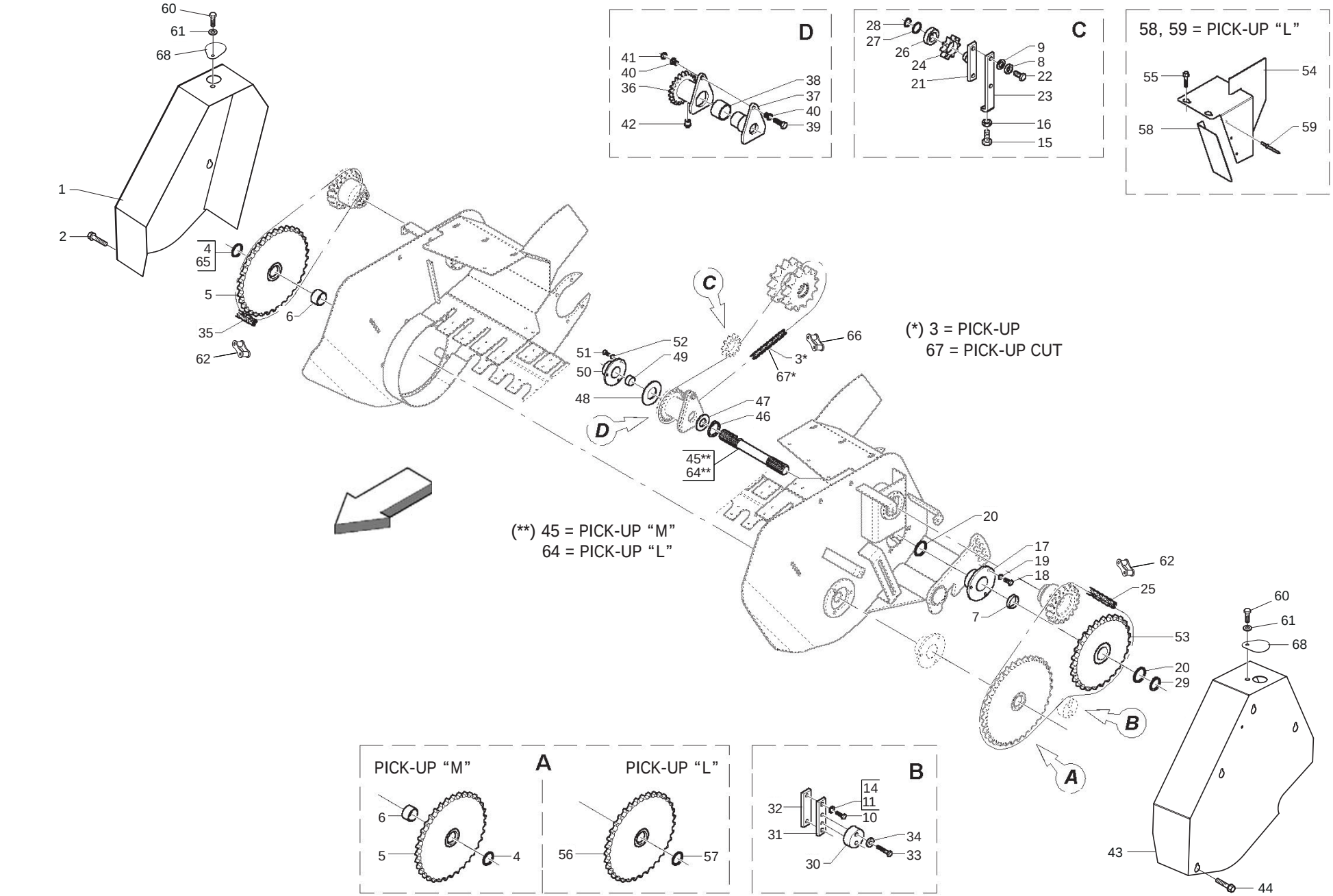

MASCHIO

cod. F07022343

TRASMISSIONE PICK-UP
PICK-UP TRANSMISSION

TAV_240

Pos.	Cod.	Descrizione	Description	Description	Benennung	Descripcion
1	B07SP0198R	CARTER DX PICK UP	SEE 7MP0125	CARTER DROIT PU LT	SIEHE 7MP0125	
2	B00370001R	VITE TE M 8X16 A SEZ.TRILOBATA	SCREW TRE M 8X16 SEZ TROUBLED	VIS	SCHRAUBE M 8X15	
3	B030E1026R	CATENA RULLI ISO 16 B-1 26M	ROLLER CHAIN ISO16 B-1 26M	CHAINE ROULEAUX	WALZENKETTE	
4	B01300100R	SPES. 30,3 40 0,5 ZINCATO	SHIM GALV	ENTRETOISE GALV	DISTANZSTUECK 30,3 40 0,5	
5	B034P0002R	INGR. Z=35-3 4 ISO ASPO LT	GEAR Z=35; 3 4; ISO 12B-1	ENGRANAGE	ZAHNRAD	
6	B013P0039R	DISTANZIALE 30,5X42,4X15	SPACER	ENTRETOISE	DISTANZSTUECK	
7	B013P0040R	DISTANZIALE 35,5X42,4X15	SPACER	ENTRETOISE	DISTANSTUECK	
8	B01516038R	RALLA 13 32 5	FIFTH WHEEL	BUTEE	SCHEIBE	
9	F01420120R	ROS.M12 13X36X2,5 U6593 ZN	WASHER M12 13X36X2,5 U6593 ZN	RONDELLE M12 13X36X2,5 ZN		
10	F01020512R	VITE M12X1,75X35 U5739 8.8ZN	SCR. M12X1,75X35 U5739 8.8ZN	VIS M12X1,75X35 5739 8.8 ZN	SCHR. M12X1,75X35 5739 8.8 ZN	TORN. M12X1,75X35 5739 8.8 ZN
11	F01410062R	ROS.M10 10,5X 18X 2 U6592 ZN	WASHER M10 10,5X 18X 2 U6592	RONDELLE M10 10,5X18X2 ZN	DICHTUNGSRING M10 10,5X18X2 ZN	RONDANA M10 10,5X18X2 ZN
14	B01523831R	RALLA 12 33 5	FIFTH WHEEL	BUTEE	UMBORDELUNG 12 33 5	
15	F01020519R	VITE M12X1,75X 60 U5739 8.8ZN	SCREW M12X1,75X 60 U5739 8.8ZN			
16	F01200293R	DADO M12X1,75 U5588 CL8 ZN	NUT M12X1,75 U5588 6S ZN	ECROU M12X1,75 U5588 6S ZN	MUTTER M12X1,75 U5588 6S ZN	TUERCA M12X1,75 U5588 6S ZN
17	B02353035R	SUPPORTO FLANG.TONDO 35 LAMIER	BEARING FLANGED SUPPORT D.35	SUPPORT FLANGE ROND 35 LAMES	FLANSCHLAGER	
18	F01020470R	VITE M10X1,5X20 U5739 8.8ZN	SCR. M10X1,5X20 U5739 8.8ZN	VIS M10X1,5X20 U5739 8.8 ZN	SCHRAUBE M10X1,5X20 U5739 ZN	TORNILLOM10X1,5X20 U5739 8.8ZN
19	F01410062R	ROS.M10 10,5X 18X 2 U6592 ZN	WASHER M10 10,5X 18X 2 U6592	RONDELLE M10 10,5X18X2 ZN	DICHTUNGSRING M10 10,5X18X2 ZN	RONDANA M10 10,5X18X2 ZN
20	B01534416R	SPES. 35 43 1 ZINCATO	SHIM	ENTRETOISE	AUSGLEICHSCHEIBE 35X43X1	
21	B07S01013R	TENDITORE PU	PICK-UP TENSIONER	TENDEUR PU	PICK-UP SPANNER	
22	F01020510R	VITE M12X1,75X30 U5739 8.8ZN	SCR. M12X1,75X30 U5739 8.8ZN	VIS M12X1,75X30 U5739 8.8ZN	SCHRAU.M12X1,75X30 U5739 8.8ZN	TORN. M12X1,75X30 U5739 8.8ZN
23	B0C6P0065R	TIRANTE INFALDATORE	FEEDER TIE ROD	TIRANT AMENEUR	ZUGSTAB RAFFER	
24	B03400274R	CORONA Z10-1 ISO F52 TRATT	SPROCKET Z=10-1	ENGRANAGE SPECIAL TRAITE	ZAHNKRANZ Z=10-1	
25	B03111063R	CAT RULLI ASA 60-1 63 MGL ISO	ROLLER CHAIN	CHAINE ROULEAUX	KETTE DER WALZEN	
26	F04010170R	CUSC.D25 D52 B15 6205 2RS EX	BEARING D25 D52 B15 6205 2RS	ROULEMENT 6205 2RS	LAGER 6205 2RS	COJINETE 6205 2RS
27	B01300104R	SPES. 25,5 37 0,2	SHIM	ENTRETOISE	BEILAGSCHEIBE 25,5 37 0,2	
28	F02050101R	ANELLO E. DE 25X 1,2 U7435 C7	SEEGER RING E. 25X1,2 7435 C70	SEEGER E. 25X 1,2 U7435 C70	SEEGERING E. 25X 1,2 U7435 C70	ANILLO E. 25X 1,2 U7435 C70
29	B01700035R	ANEL. D ARR. ALB. 35-E UNI3653	SEEGER RING	BAGUE SEEGER	SEEGERRING 35-E	
30	B07VP0513R	TENDICATENA IN NYLON	NYLON CHAIN TIGHTENER	TENDEUR DE CHAINE EN NYLON		
31	B0C6P0273R	ATTACCO GALOPPINO	ATTACHEMENT	ATTELAGE	ANCHLUSS	
32	B0C6P0275R	PIASTRA ATTACCO GALOPPINO	PULLEY PLATE	PLAQUE TENDEUR	ZUGSTAB	
33	F01020158R	VITE M12X1,75X55 U5737 8.8ZN	BOLT M12X1,75X55 U5737 8.8ZN	VIS M12X1,75X55 U5737 8.8 ZN	SCHR. M12X1,75X55 U5737 8.8 ZN	TORN. M12X1,75X55 U5737 8.8 ZN
34	B01523831R	RALLA 12 33 5	FIFTH WHEEL	BUTEE	UMBORDELUNG 12 33 5	
35	B03111046R	CATENA RULLI ASA 60-1 46 MGL	ROLLER CHAIN ASA60-1 46 MGL	CHAINE ROULEAUX	KETTE DER WALZEN	
36	B03400241R	MOZZO DI SICUREZZA PICK-UP	SURETY HUB	MOYEU DE SURETE	SICHERHEIT NABE	
37	B07S01001R	MOZZO CALETTATO	SPLINED HUB	MOYEU	VERZAHNTE NABE	
38	B02500001R	BRONZINA 50X56 L38	BUSHING 50X56 L38	COUSSINET	LAGERBUCHSE	
39	B00170845R	VITE ZINCATA M 8X45-10.9 U5737	ZN SCREW M 8X45-10.9 U5737	VIS	SCHRAUBE	
40	B00511057R	BUSSOLA DI TRANCIAMENTO	BUSHING	BAGUE	BUCHSE	
41	B008B0208R	DADO M 8X1,25 D980 8 ZN	NUT	ECROU	SELBSTSICHERNDE MUTTER M8 KL8	
42	B04200610R	INGRASS.A SFERE M6X1 LUNGO	GREASE NIPPLE	GRAISSEUR HYDRAULIQUE	GERADER SCHMIERNIPPEL M6X1	
43	B07SP0199R	CARTER SX PICK UP	SEE 7MP0126	CARTER GAUCHE PU LT	SIEHE ZMP0126	
44	B00370001R	VITE TE M 8X16 A SEZ.TRILOBATA	SCREW TRE M 8X16 SEZ TROUBLED	VIS	SCHRAUBE M 8X15	
45	B035P0010R	CONTRALBERO CORTO PU M LT	COUNTERSHAFT	CONTREARBRE COURT PU M LT	GEGENWELLE	
46	B01700040R	ANEL. D ARR. ALBERO 40-E UNI 3	SEEGER RING	BAGUE SEEGER	SEEGERRING 40-E	
47	B01300126R	SPES. 40 48 1 ZINC.ST_013	SHIM	ENTRETOISE	DISTANZSTUECK 40 408 1	
48	B01534395R	RALLA 35.5X 62 X 3 ZINCATO	FIFTH WHEEL	BUTEE	SPEZIALSCHEIBE	
49	B01300607R	DISTANZIALE 35X42X35	SPACER	ENTRETOISE	DISTANZSTUECK 35X42X35	
50	B02353035R	SUPPORTO FLANG.TONDO 35 LAMIER	BEARING FLANGED SUPPORT D.35	SUPPORT FLANGE ROND 35 LAMES	FLANSCHLAGER	
51	F01020470R	VITE M10X1,5X20 U5739 8.8ZN	SCR. M10X1,5X20 U5739 8.8ZN	VIS M10X1,5X20 U5739 8.8 ZN	SCHRAUBE M10X1,5X20 U5739 ZN	TORNILLOM10X1,5X20 U5739 8.8ZN
52	F01410062R	ROS.M10 10,5X 18X 2 U6592 ZN	WASHER M10 10,5X 18X 2 U6592	RONDELLE M10 10,5X18X2 ZN	DICHTUNGSRING M10 10,5X18X2 ZN	RONDANA M10 10,5X18X2 ZN
53	B034P0004R	INGR.Z=27-3 4 ISO CON MOZZO	GEAR	ENGRANAGE	ZAHNRAD MIT RADACHSE	
54	BSP000026R	CARTER SICUREZZA NEW	SAFETY NEW CARTER			
55	B00370001R	VITE TE M 8X16 A SEZ.TRILOBATA	SCREW TRE M 8X16 SEZ TROUBLED	VIS	SCHRAUBE M 8X15	
56	B034P0041R	INGR. Z=35; 3 4; ISO 12B-1	GEAR	ENGRANAGE	ZAHNRAD Z=35-3 4	
57	B01534416R	SPES. 35 43 1 ZINCATO	SHIM	ENTRETOISE	AUSGLEICHSCHEIBE 35X43X1	
58	B0C005384R	PROLUNGA CARTER SICUREZZA PUL	SAFETY GUARD EXTENSION	RALLONGE CARTER SURETE	VERLAENGERUNG CARTER	
59	F02250111R	RIVETTO STR. 4 X 6 U9200A AL	RIVET 4 X6	RIVET 4 X6	KUPFERNIET 4 X6	REMACHE 4 X6

TAV_240

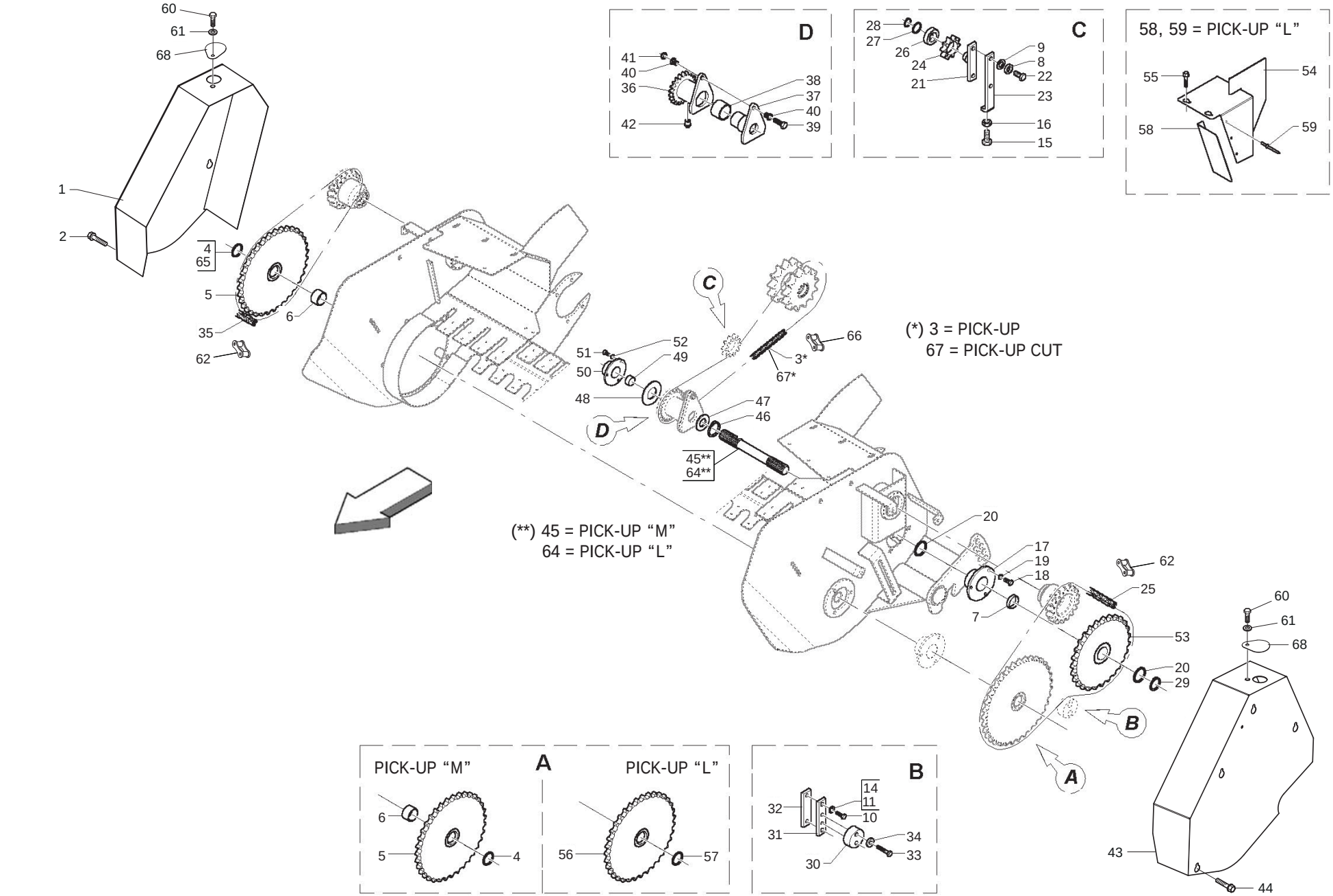

MASCHIO

cod. F07022343

TRASMISSIONE PICK-UP
PICK-UP TRANSMISSION

TAV_240

Pos.	Cod.	Descrizione	Description	Description	Benennung	Descripcion
60	F01020432R	VITE M8X1,25X16 U5739 8.8ZN	SCR. M8X1,25X16 U5739 8.8ZN	VIS M8 X1,25X16 U5739 8.8 ZN	SCHRAUBE M8X1,25X16U5739 8.8ZN	TORNILLO M8X1,25X16U5739 8.8ZN
61	F01410051R	ROS.M8 8,4X 17X1,6 U6592 ZN	WASHER M8 8,4X17X1,6 U6592 ZN	RONDELLE M8 8,4X17X1,6 ZN	SCHEIBE M8 8,4X17X1,6 U6592 ZN	ARANDELA M8 8,4X17X1,6 U6592ZN
62	B03110007R	GIUNTO MOLL.N.26 ASA60-1	SPRING JOINT N. 26 ASA 60-1	JOINT	KETTENSCHLOSS	
64	B035P0058R	CONTRALBERO CORTO PU L LT	COUNTERSHAFT	CONTRE ARBRE	KURZE GEGENWELLE	
65	B01300101R	SPES. 30,3 40 1 ZINCATO	SHIM GALV	ENTRETOISE GALV	DISTANZSTUECK 30,3 40 1	
66	B030E0017R	GIUNTO MOLL N26 ISO 16 B-1	SPRING JOINT N.26 ISO 16 B-1	JOINT RESSORT	KETTENFEDER	
67	B030E1052R	CATENA RULLI ISO 16 B-1 52M	ROLLER CHAIN	CHAINE ROULEAUX	WALZENKETTE	
68	B0C6P0470R	COPERCHIO PER CARTER PICK-UP	COVER FOR CARTER PICK-UP			

TAV_250

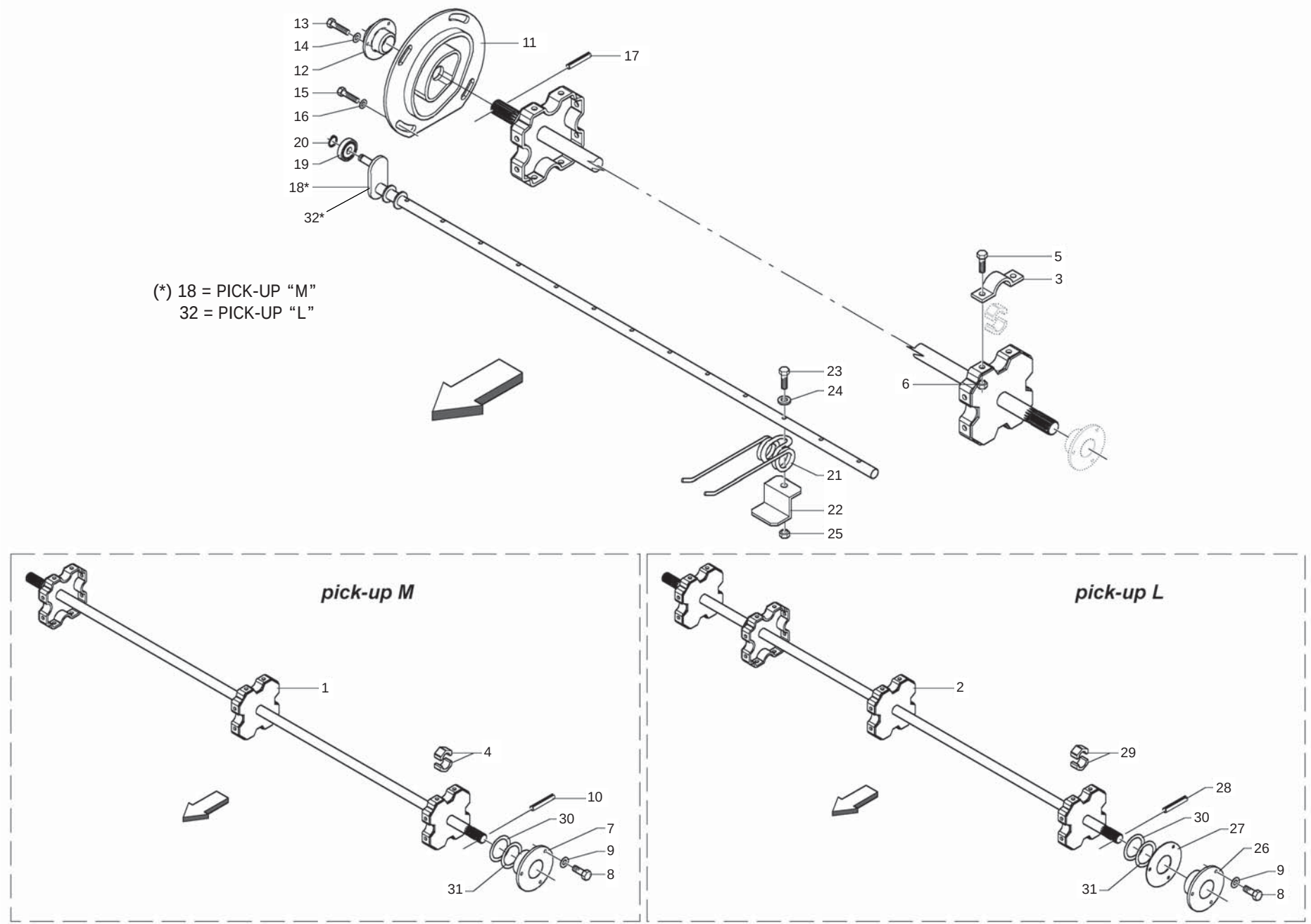
13
14
12
15
16
20
19
18*
32*
11
17
5
3
6
23
24
21
22
25
(*) 18 = PICK-UP “M”
32 = PICK-UP “L”
pick-up M
1
4
10
30
7
9
8
31
pick-up L
2
29
28
30
27
26
9
8
31

ASPO
PICK-UP SHAFT

TAV_250

Pos.	Cod.	Descrizione	Description	Description	Benennung	Descripcion
1	B07SP0288R	CORPO ASPO M	AUGER BODY	CORPS ENROULEUR	KOERPER ASPO M	
2	B07SP0195R	CORPO ASPO L LT	REEL BODY	CORPS ENROULEUR LT	KOERPER ASPO L LT	
3	B0C001521R	CAVALLOTTO	U BOLT	BOULON	BUEGELBOLZEN	
4	B025P0010R	SEMIBUSSOLA PER ASPO PICK-UP	HALF-BUSHFOR ASPO PICK-UP	SEMI-PALIER SPECIAL	HALBLAGERBUCHSE	
5	F01020472R	VITE M10X1,5X25 U5739 8.8ZN	SCR. M10X1,5X25 U5739 8.8ZN	VIS M10X1,5X25 U5739 8.8 ZN	SCHRAUBE M10X1,5X25 U5739 8.8	TORNILLO 10X25 U5739 8.8 ZN
6	B008B0310R	DADO M10X 1,5 D980 8 ZN	NUT	ECROU	SELBSTSICHERNDE MUTTER M10 KL8	
7	B02353030R	SUPP.FLANG.TONDO 30 LAM.	BEARING FLANGED SUPPORT 30	SUPPORT FLANGE ROND 30 LAM.	FLANSCHLAGER	
8	F01020470R	VITE M10X1,5X20 U5739 8.8ZN	SCR. M10X1,5X20 U5739 8.8ZN	VIS M10X1,5X20 U5739 8.8 ZN	SCHRAUBE M10X1,5X20 U5739 ZN	TORNILLOM10X1,5X20 U5739 8.8ZN
9	F01410062R	ROS.M10 10,5X 18X 2 U6592 ZN	WASHER M10 10,5X 18X 2 U6592	RONDELLE M10 10,5X18X2 ZN	DICHTUNGSRING M10 10,5X18X2 ZN	RONDANA M10 10,5X18X2 ZN
10	F02100122R	SPINA E.P. 6X 45 U6873 C70 BR	PIN EL. 6 X45 DIN 1481	FICHE EL. 6 X45 DIN 1481	SPANNSTIFT 6 X45 DIN 1481	CLAVIJA EL.6 X45 DIN 1481
11	B057P0203R	CAMMA PICK-UP	PICK-UP CAM			
12	B02353030R	SUPP.FLANG.TONDO 30 LAM.	BEARING FLANGED SUPPORT 30	SUPPORT FLANGE ROND 30 LAM.	FLANSCHLAGER	
13	F01020470R	VITE M10X1,5X20 U5739 8.8ZN	SCR. M10X1,5X20 U5739 8.8ZN	VIS M10X1,5X20 U5739 8.8 ZN	SCHRAUBE M10X1,5X20 U5739 ZN	TORNILLOM10X1,5X20 U5739 8.8ZN
14	F01410062R	ROS.M10 10,5X 18X 2 U6592 ZN	WASHER M10 10,5X 18X 2 U6592	RONDELLE M10 10,5X18X2 ZN	DICHTUNGSRING M10 10,5X18X2 ZN	RONDANA M10 10,5X18X2 ZN
15	F01020510R	VITE M12X1,75X30 U5739 8.8ZN	SCR. M12X1,75X30 U5739 8.8ZN	VIS M12X1,75X30 U5739 8.8ZN	SCHRAU.M12X1,75X30 U5739 8.8ZN	TORN. M12X1,75X30 U5739 8.8ZN
16	B01523831R	RALLA 12 33 5	FIFTH WHEEL	BUTEE	UMBORDELUNG 12 33 5	
17	F02100122R	SPINA E.P. 6X 45 U6873 C70 BR	PIN EL. 6 X45 DIN 1481	FICHE EL. 6 X45 DIN 1481	SPANNSTIFT 6 X45 DIN 1481	CLAVIJA EL.6 X45 DIN 1481
18	B7S00991LR	BARRA PORTADENTI 200	BAR PORTADENTI 200			
19	B020R1210R	ROTELLA SKF 361201 R	ROLLER SKF 361201 R PU BINDER	GALET SKF 361201 R PICK UP LEG	LAGER SKF 361201 R	
20	B01700012R	ANEL. D ARR. ALB. 12-E UNI3653	SEEGER RING	BAGUE SEEGER	SEEGERRING 12-E	
21	B018P0003R	DENTE RACCOGLITORE PICK-UP	TOOTH COLLECTING PU	DENT PICK-UP	PICK-UP ZINKEN	
22	B0C000214R	PIASTRA SOSTEGNO MOLLA	SPRING SUPPORTING PLATE	PLAQUE SUPPORT RESSORT	FEDER STUETZPLATTE	
23	F01020074R	VITE M8X1,25X50 U5737 10.9ZD	SCR. M8X1,25X50 U5737 10.9ZD	VIS M 8X50	SCHRAUBE M 8X50	TORNILLO M 8X50
24	F01420048R	ROS.M8 8,4X 24X 2 U6593 ZN	WASHER M8 8,4X 24X2 U6593 ZN	RONDELLE M8 8,4X24X 2 U6593 ZN	SCHEIBEN M8 8,4X24X 2 U6593 ZN	ARANDELA M8 8,4X 24X2 U6593 ZN
25	F01230034R	DADO M8X1,25 D982 8ZN	NUT M8X1,25 D982 8ZN	ECROU M8X 1,25 ZN	MUTTER M8X 1,25 D982 8 ZN	TUERCA M8X 1,25 D982 8 ZN
26	B02353035R	SUPPORTO FLANG.TONDO 35 LAMIER	BEARING FLANGED SUPPORT D.35	SUPPORT FLANGE ROND 35 LAMES	FLANSCHLAGER	
27	B01301126R	SPES.	SHIM	ENTRETOISE	DICHTUNG	
28	F02100124R	SPINA E.P. 6X 50 U6873 C70 BR	PIN EL. 6X50 U6873 C70 BR	GOUJON 6X50 U6873 C70 BR	STIFT 6X50 U6873 C70 BR	ESPINA 6X50 U6873 C70 BR
29	B025P0010R	SEMIBUSSOLA PER ASPO PICK-UP	HALF-BUSHFOR ASPO PICK-UP	SEMI-PALIER SPECIAL	HALBLAGERBUCHSE	
30	B01300100R	SPES. 30,3 40 0,5 ZINCATO	SHIM GALV	ENTRETOISE GALV	DISTANZSTUECK 30,3 40 0,5	
31	B01300101R	SPES. 30,3 40 1 ZINCATO	SHIM GALV	ENTRETOISE GALV	DISTANZSTUECK 30,3 40 1	
32	B07SP1050R	BARRA P.DENTI PU 220 TEMPRATA	PICK-UP BAR HARDENED 200	BARRE PO.-DENTS PU 220 TEMP.		

TAV_260

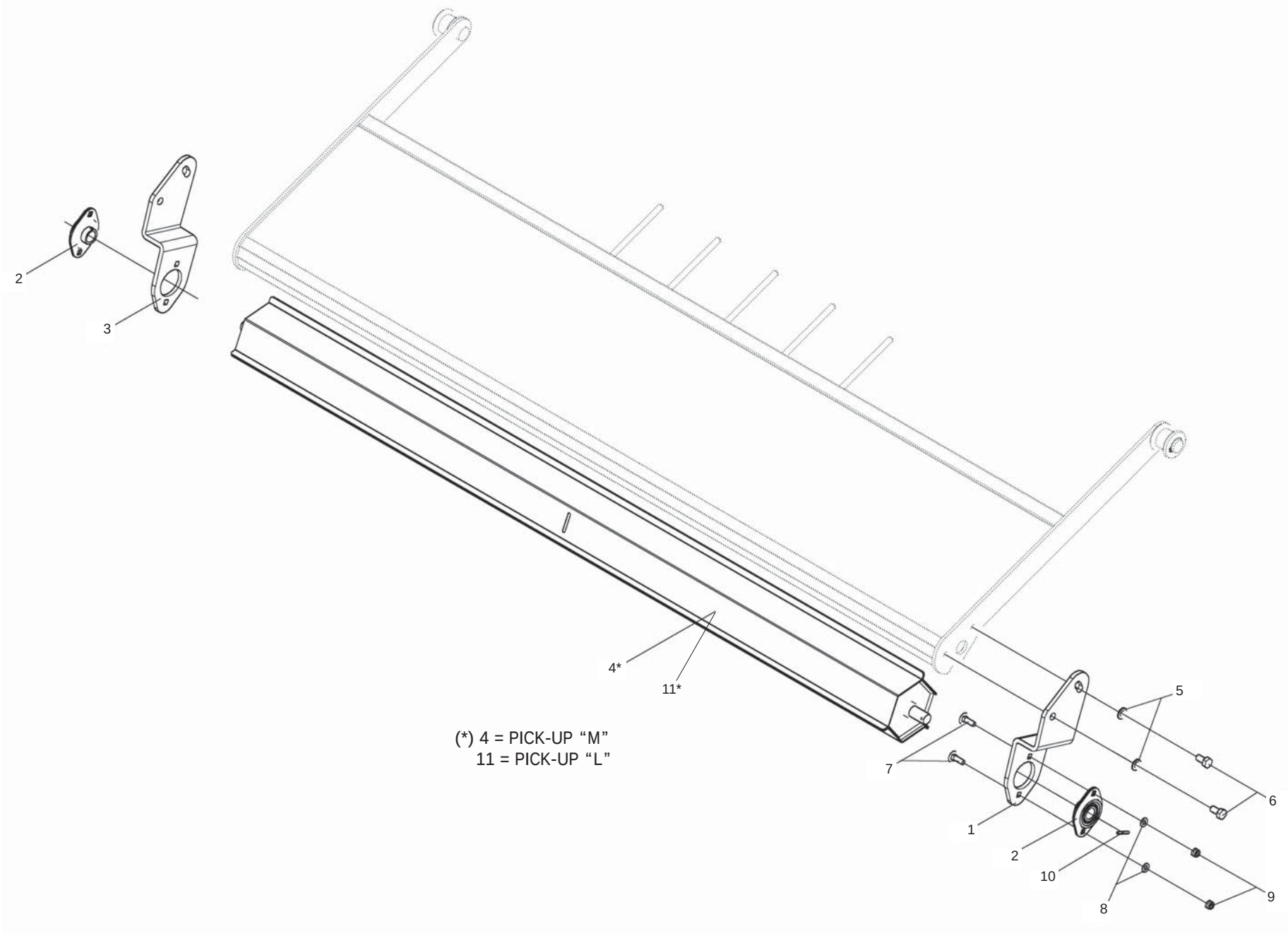

(*) 4 = PICK-UP “M”
11 = PICK-UP “L”

RULLO CONVOGLIATORE
ROLLER CONVEYOR

TAV_260

Pos.	Cod.	Descrizione	Description	Description	Benennung	Descripcion
1	B0C4P0187R	ATTACCO SX	ATTACCO SX .			
2	B02341020R	SUPP.FLANG.OV 20 LAM NBR-NSK	SUPPORT	SUPPORT	GEFLANSCHTES LAGER	
3	B0C4P0188R	ATTACCO DX	ATTACCO DX .			
4	B07SP0341R	RULLO CONVOGLIATORE M	CONVEYOR ROLLER M			
5	F01420060R	ROS.M10 10,5X 30X2,5 U6593 ZG	GALV.WASHER 10,5X30X2,5 U6593	RONDELLE 10,5X30	SCHEIBE 10,5X30	ARANDELA 10,5X30
6	F01020470R	VITE M10X1,5X20 U5739 8.8ZN	SCR. M10X1,5X20 U5739 8.8ZN	VIS M10X1,5X20 U5739 8.8 ZN	SCHRAUBE M10X1,5X20 U5739 ZN	TORNILLOM10X1,5X20 U5739 8.8ZN
7	F01060202R	VITE M8X1,25X25 U5731 4.6ZN	SCR. M8X1,25X25 U5731 4.6ZN	VIS M8X1,25X25 U5731 4.6	DUEBEL M8X1,25X25 U5731 4.6 ZN	TORNILLO M8X1,25X25 U5731 4.6
8	F01410051R	ROS.M8 8,4X 17X1,6 U6592 ZN	WASHER M8 8,4X17X1,6 U6592 ZN	RONDELLE M8 8,4X17X1,6 ZN	SCHEIBE M8 8,4X17X1,6 U6592 ZN	ARANDELA M8 8,4X17X1,6 U6592ZN
9	B00920208R	DADO M8X1 D985 8ZN	NUT M8X1 D985 8ZN	ECROU	SELBSTSICHERNDE MUTTER M8-5S	
10	F02100065R	SPINA E.P. 4X 30 U6873 C70 BR	PIN EL. 4X30 DIN 1481	GOUPILLE EL.4 X30 DIN 1481	SPANNSTIFT 4X30 DIN 1481	CLAVIJA EL.4 X30 DIN 1481
11	B07SP0342R	RULLO CONVOG. L	RULLO CONVOG. L .			

TAV_270

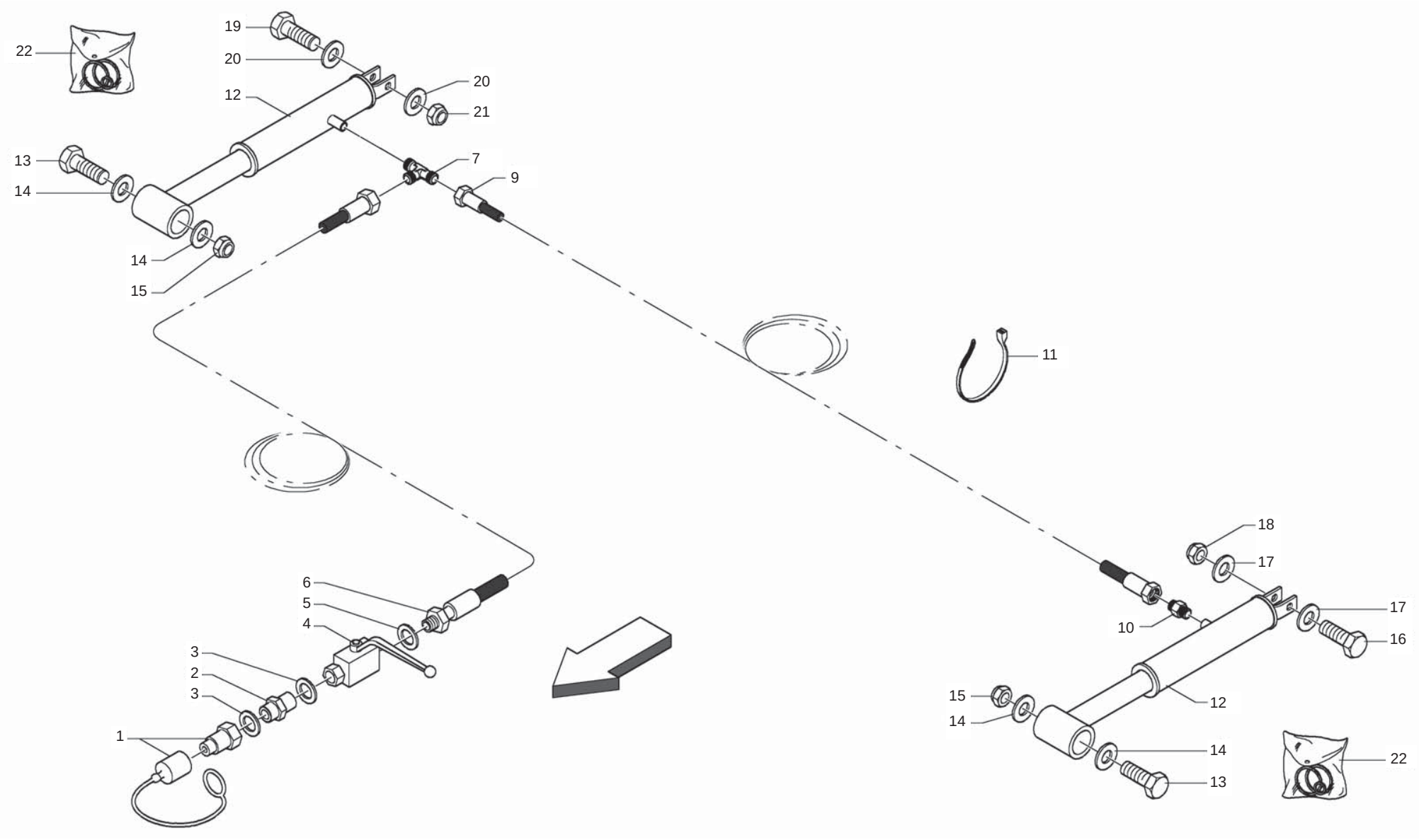

MASCHIO

cod. F07022343

IMPIANTO IDRAULICO PICK-UP
PICK-UP HYDRAULIC SYSTEM

TAV_270

Pos.	Cod.	Descrizione	Description	Description	Benennung	Descripcion
1	B0H6000A0R	INNESTO RAP.NV 12GAS-M	QUICK CLUTCH	EMBRAYAGE	SCHNELLKUPPLUNG	
2	B0H733671R	NIPPLO RID.FORO 1MM. 1 2 -1 4	NIPPLE 1 2 -1 4	NIPPLE 1 MM 1 2 -1 4	NIPPEL 1 2 -1 4	
3	B01441415R	RONDELLA IN RAME 1 4	WASHER	RONDELLE	BEILAGSCHEIBE 1 4 13X19X1,5	
4	B0H000119R	RUBIN. A SFER.A.P.1 4 FEMM.-F	BALL COCK	ROBINET 1 4 FEMELLE	KUGELHAHN	
5	B01442015R	ROS. 21 X27X1,5 RAME -1 2	WASHER	RONDELLE	BEILAGSCHEIBE 1 2	
6	B0H000250R	TUBO IDRAUL.	HYDRAULIC HOSE	TUYAU HYDRAULIQUE	HYDRAULIKSCHLAUCH	
7	B0H000098R	RACCORDO T 10 TN 127-10LR	UNION T 10	RACCORD T 10	T.VERSCHRAUBUNG	
9	B0H000251R	TUBO IDRAUL.	HYDRAULIC HOSE	TUYAU HYDRAULIQUE	HYDRAULIKSCHLAUCH	
10	B0H000139R	RACCORDO I 10 RASTELLI	UNION I 10	RACCORD I SEULEMENT CORPS	VERBINDUNGSTUECK I 10	
11	F05150055R	FASCETTA POLYA. 3,6X200 NERA	WHITE BAND	BANDE BIANCHE	WEIBE BAND	CINTA BLANCA
12	B0H400062R	MARTINETTO PICK-UP	SPRINTER PICK-UP JACK	VERIN PICK-UP SPRINTER	SPRINTER PICK-UP ZYLINDER	
13	F01020976R	VITE M16X 2X55 U5737 8.8 ZN	SCREW M16X 2X55 U5737 8.8 ZN			
14	F01410100R	ROS.M16 17X 30X 3 U6592 ZN	WASHER M16 17X30X3 U6592 ZN	RONDELLE M16 17X30X3 ZN	SCHRAUBE M16 17X 30X3 U6592 ZN	ARANDELA M16 17X30X 3 U6592 ZN
15	B00920516R	DADO M16X 1,5 D985 6S ZN	NUT M16X1,5 D985 6S ZN	ECROU	SELBSTSICHERNDE MUTTER M16-5S	
16	F01020264R	VITE M16X2X90 U5737 8.8ZN	SCR. M16X2X90 U5737 8.8ZN	VIS M16X2X90 5737 8.8 ZN	SCHRAUBE M16X2X90 5737 8.8 ZN	TORN. M16X2X90 5737 8.8 ZN
17	F01410100R	ROS.M16 17X 30X 3 U6592 ZN	WASHER M16 17X30X3 U6592 ZN	RONDELLE M16 17X30X3 ZN	SCHRAUBE M16 17X 30X3 U6592 ZN	ARANDELA M16 17X30X 3 U6592 ZN
18	B00920516R	DADO M16X 1,5 D985 6S ZN	NUT M16X1,5 D985 6S ZN	ECROU	SELBSTSICHERNDE MUTTER M16-5S	
19	B00191680R	VITE M16X 2X 80 U5737 8.8ZN	SCREW	VIS	SCHRAUBE	
20	F01410100R	ROS.M16 17X 30X 3 U6592 ZN	WASHER M16 17X30X3 U6592 ZN	RONDELLE M16 17X30X3 ZN	SCHRAUBE M16 17X 30X3 U6592 ZN	ARANDELA M16 17X30X 3 U6592 ZN
21	B00920516R	DADO M16X 1,5 D985 6S ZN	NUT M16X1,5 D985 6S ZN	ECROU	SELBSTSICHERNDE MUTTER M16-5S	
22	B0H400061R	KIT GUARNIZ. MARTIN. PICK_UP	KIT JOINTS	KIT JOINTS POUR VERIN	DICHTUNGSSATZ	

TAV_280

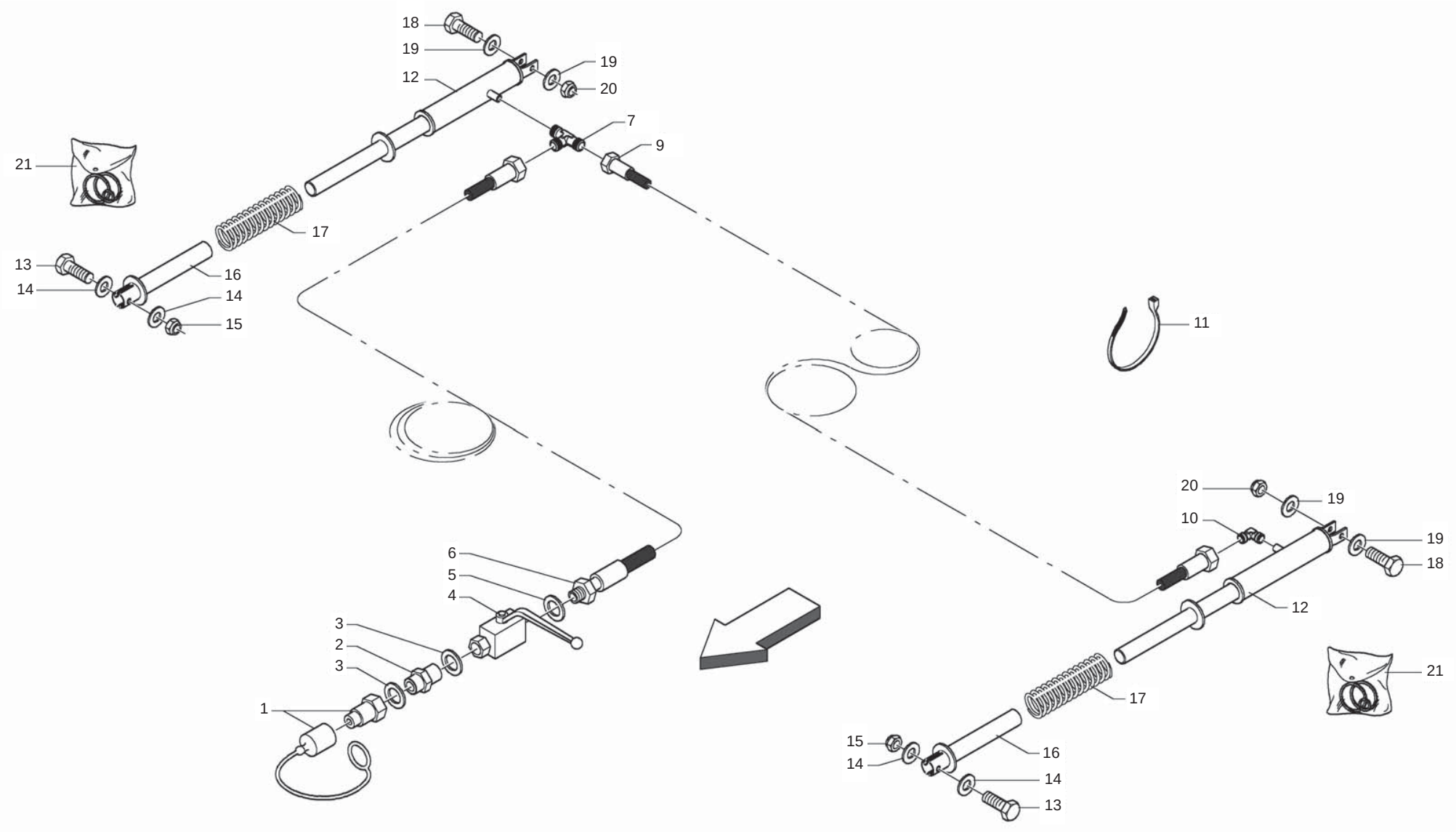

MASCHIO

cod. F07022343

IMPIANTO IDRAULICO PICK-UP CUT
PICK-UP CUT HYDRAULIC SYSTEM

TAV_280

Pos.	Cod.	Descrizione	Description	Description	Benennung	Descripcion
1	B0H6000A0R	INNESTO RAP.NV 12GAS-M	QUICK CLUTCH	EMBRAYAGE	SCHNELLKUPPLUNG	
2	B0H733671R	NIPPLO RID.FORO 1MM. 1 2 -1 4	NIPPLE 1 2 -1 4	NIPPLE 1 MM 1 2 -1 4	NIPPEL 1 2 -1 4	
3	B01441415R	RONDELLA IN RAME 1 4	WASHER	RONDELLE	BEILAGSCHEIBE 1 4 13X19X1,5	
4	B0H000119R	RUBIN. A SFER.A.P.1 4 FEMM.-F	BALL COCK	ROBINET 1 4 FEMELLE	KUGELHAHN	
5	B01442015R	ROS. 21 X27X1,5 RAME -1 2	WASHER	RONDELLE	BEILAGSCHEIBE 1 2	
6	B0H000250R	TUBO IDRAUL.	HYDRAULIC HOSE	TUYAU HYDRAULIQUE	HYDRAULIKSCHLAUCH	
7	B0H000264R	RACCORDO T 10 TN96-10LR	T FITTING TN96-10LR	RACCORD T 10	KUPPLUNG T 10	
9	B0H000251R	TUBO IDRAUL.	HYDRAULIC HOSE	TUYAU HYDRAULIQUE	HYDRAULIKSCHLAUCH	
10	B0H000086R	RACCORDO L 10 TN94-10LR	UNION L 10	RACCORD L 10	ANSCHLUSSSTUECK L 10	
11	F05150055R	FASCETTA POLYA. 3,6X200 NERA	WHITE BAND	BANDE BIANCHE	WEIBE BAND	CINTA BLANCA
12	B0H400072R	MARTINETTO PICK-UP	SPRINTER PICK-UP JACK CUT	VERIN PICK-UP	SPRINTER PICK-UP ZYLINDER CUT	
13	F01020256R	VITE M16X2X60 U5737 8.8ZN	SCR. M16X2X60 U5737 8.8ZN	VIS M16X 2X60 U5737 8.8 ZN	SCHRAUBE M16X2X60 U5737 8.8 ZN	TORNILLO M16X2X60 U5737 8.8 ZN
14	F01410100R	ROS.M16 17X 30X 3 U6592 ZN	WASHER M16 17X30X3 U6592 ZN	RONDELLE M16 17X30X3 ZN	SCHRAUBE M16 17X 30X3 U6592 ZN	ARANDELA M16 17X30X 3 U6592 ZN
15	B00920516R	DADO M16X 1,5 D985 6S ZN	NUT M16X1,5 D985 6S ZN	ECROU	SELBSTSICHERNDE MUTTER M16-5S	
16	B07S01072R	GUIDA MARTINETTO	JACK GUIDE	GUIDE VERIN	ZYLINDERFUEHRUNG	
17	B01800062R	MOLLA PU TOPCUT	TOPCUT PICK-UP TINE	DENT PICK UP TOPCUT	TOPCUT PICK-UP FEDERZINKEN	
18	F01020256R	VITE M16X2X60 U5737 8.8ZN	SCR. M16X2X60 U5737 8.8ZN	VIS M16X 2X60 U5737 8.8 ZN	SCHRAUBE M16X2X60 U5737 8.8 ZN	TORNILLO M16X2X60 U5737 8.8 ZN
19	F01410100R	ROS.M16 17X 30X 3 U6592 ZN	WASHER M16 17X30X3 U6592 ZN	RONDELLE M16 17X30X3 ZN	SCHRAUBE M16 17X 30X3 U6592 ZN	ARANDELA M16 17X30X 3 U6592 ZN
20	B00920516R	DADO M16X 1,5 D985 6S ZN	NUT M16X1,5 D985 6S ZN	ECROU	SELBSTSICHERNDE MUTTER M16-5S	
21	B0H400061R	KIT GUARNIZ. MARTIN. PICK_UP	KIT JOINTS	KIT JOINTS POUR VERIN	DICHTUNGSSATZ	

TAV_290

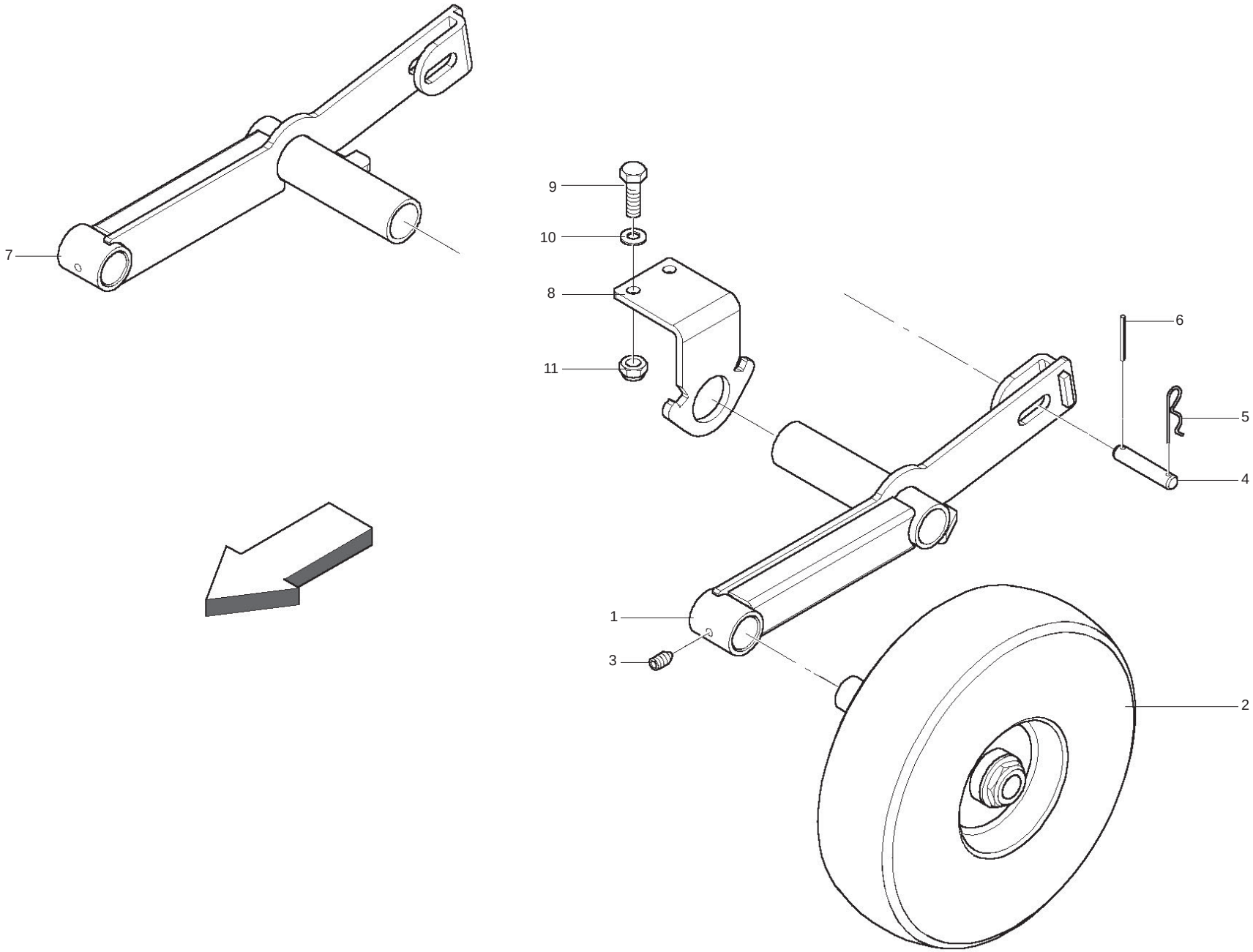

RUOTE PICK-UP
PICK-UP WHEEL

TAV_290

Pos.	Cod.	Descrizione	Description	Description	Benennung	Descripcion
1	B07SP0084R	ATTACCO RUOTA SX LT	LT WHELL LEFT CONNECTION	ATTELAGE ROUE GAUCHE LT	RAD ANSCHLUSS LINKS LT	
2	B07100040R	RUOTA IN GOMMA CON FUSEL16.650	TYRE WITH SPINDLE	ROUE EN CAOUTCHOUC	GUMMI RAD	
3	B00431016R	VITE STEI M10X16-12.9 UNI 5	SCREW	VIS	SCHRAUBE	
4	B01300610R	SPINA 15X 65 2F 4	PIN	AXE	ZAPFEN 15 X65	
5	F02200363R	COPIGLIA R 3X 62 ZN	SPRING SPLIT PIN 3X 62 ZN	GOUPILLE R 3X62	SPLINT R 3X62	CHAVETA R 3X62
6	F02100060R	SPINA E.P. 4X 40 U6873 C70 BR	PIN E.P. 4X 40 U6873 C70 BR			
7	B07SP0085R	ATTACCO RUOTA DX LT	LT WHELL RIGHT CONNECTION	ATTELAGE ROUE DROIT LT	RAD ANSCHLUSS RECHTS LT	
8	B0C6P0426R	LAMIERA SUPP. RUOTINA	PLATE	TOLE	RADHALTERBLECH	
9	F01020512R	VITE M12X1,75X35 U5739 8.8ZN	SCR. M12X1,75X35 U5739 8.8ZN	VIS M12X1,75X35 5739 8.8 ZN	SCHR. M12X1,75X35 5739 8.8 ZN	TORN. M12X1,75X35 5739 8.8 ZN
10	F01230213R	DADO M12X1,75 U7474 CL8 ZN	NUT M12X1,75 U7474 6SZN	ECROU AUTOBL. M12	SELBSTSPERR.MUTTER M12	DADO AUTOBL. M12
11	B01421230R	ROS.M12 13X 20X2,0 U1749 ZN	WASHER	RONDELLE	SCHEIBE	

TAV_300

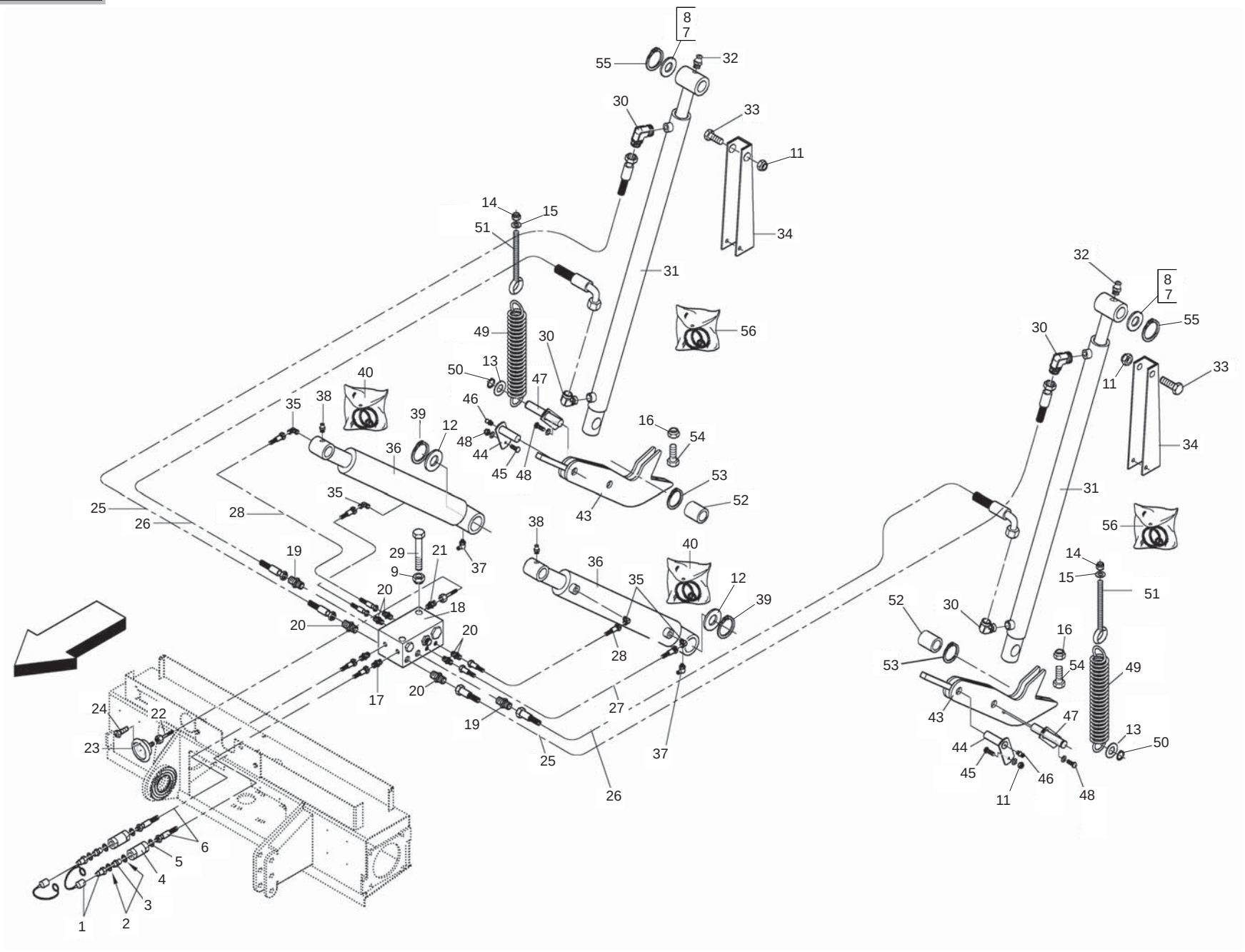

MASCHIO

cod. F07022343

IMPIANTO IDRAULICO MACCHINA
MACHINE HYDRAULIC SYSTEM

TAV_300

Pos.	Cod.	Descrizione	Description	Description	Benennung	Descripcion
1	B0H6000A0R	INNESTO RAP.NV 12GAS-M	QUICK CLUTCH	EMBRAYAGE	SCHNELLKUPPLUNG	
2	B01442015R	ROS. 21 X27X1,5 RAME -1 2	WASHER	RONDELLE	BEILAGSCHEIBE 1 2	
3	B0H6000AXR	NIPPLO 1 2	NIPPLE 1 2	NIPPLE 1 2	NIPPEL 1 2	
4	B0H000040R	FILTRO IN LINEA 92400126X	FILTER IL12 60 R 94001261	FILTRE EN LIGNE IL12 60 R94001	FILTER IL12 60 R 94001261	
5	B01442015R	ROS. 21 X27X1,5 RAME -1 2	WASHER	RONDELLE	BEILAGSCHEIBE 1 2	
6	B0H000149R	TUBO IDRAUL. L=2500	HYDRAULIC PIPE L=2500	TUYAU HYDRAULIQUE L=2500	HYDR. ROHR L=2500	
7	B01300100R	SPES. 30,3 40 0,5 ZINCATO	SHIM GALV	ENTRETOISE GALV	DISTANZSTUECK 30,3 40 0,5	
8	B01300101R	SPES. 30,3 40 1 ZINCATO	SHIM GALV	ENTRETOISE GALV	DISTANZSTUECK 30,3 40 1	
9	B00920106R	DADO M6X1 D985 8ZN	NUT	ECROU	SELBSTSICHERNDE MUTTER M6-5S	
11	B00920208R	DADO M8X1 D985 8ZN	NUT M8X1 D985 8ZN	ECROU	SELBSTSICHERNDE MUTTER M8-5S	
12	B01519696R	SPES. 35 47 1	SHIM	ENTRETOISE	DISTANZSTUCK 35 50 1	
13	F01410124R	ROS.M20 21X 37X 3 U6592 ZN	WASHER M20 21X 37X 3 U6592 ZN	RONDEL.M20 21X37X3 ZN	MUTTER M20 21X 37X 3 U6592 ZN	ARANDELA M20 21X37X3 U6592 ZN
14	B00920412R	DADO M12X1,75 D985 8 ZN	NUT	ECROU	SELBSTSICHERNDE MUTTER M12-5S	
15	B01421230R	ROS.M12 13X 20X2,0 U1749 ZN	WASHER	RONDELLE	SCHEIBE	
16	B00710516R	DADO M16X 2 U5588 6.8 ZN	NUT M16X2 U5588 6.8 ZN	ECROU	MUTTER M16-6S	
17	B0H60000YR	RACC. I 12 SOLO COR. RASTELLI	UNION I 12	RACCORD I 12	VERBINDUNGSSTUECK I 12	
18	B0H000004R	VALV.TIP.FRB06 B OLEOST.ROTOPR	VALVE FRB 06 OL	SOUPAPE TYPE FRB 06 B OLEOSTAR	VENTIL FRB 06 OL	
19	B0H000182R	RACCORDO PER RIDUTT. DI FLUSSO	OIL FLOW REDUCER PIPE FITTING	RACCORD POUR REDUCTEUR DE FLUX	ANSCHLUSS FUER REDUKTIONS	
20	B0H000139R	RACCORDO I 10 RASTELLI	UNION I 10	RACCORD I SEULEMENT CORPS	VERBINDUNGSTUECK I 10	
21	B0H000140R	NIPPLO GIUNZ GAS CILIN.1 4-1 4	NIPPLE 1 4-1 4	NIPPLE JONCTION	NIPPEL 1 4-1 4	
22	B0H000120R	MICROTUBO FD1 4 RACC.MANOMETRO	PIPE	TUYAU CAPILLAIRE MINITEST	VERBINDUNGSSCHLAUCH VERTEILERB	
23	B0H000121R	MANOMETRO PER FFPRO	GAUGE FOR FFPRO	MANOMETRE	MANOMETER FUER FFPRO	
24	B01080311R	RIVETTO STR. 3,8X11 U9200A AL	RIVET	RIVET	NIET	
25	B0H000008R	TUBO IDRAUL.NEUTRO L2550W64601	NEUTRAL HYDR PIPE L=2550W64601	TUYAU HYDRAULIQUE NEUTRE L=255	NEUTRALER HYDRAULIKSCHLAUCH L=	
26	B0H000005R	TUBO IDRAUL. ROSSO L2150W64599	RED HYDR PIPE L=2150W64599	TUYAU HYDRAULIQUE ROUGE L=2150	ROTER HYDRAULIKSCHLAUCH L=2150	
27	B0H000007R	TUBO IDRAUL.-GIALLO L=2150	YELLOW HYDRAULIC HOSE	TUYAU HYDRAULIQUE JAUN L=2150	GELBER HYDRAULIKSCHLAUCH	
28	B0H000006R	TUBO IDRAUL.AZZUR. L2150W64833	BLUE HYDR PIPE L=2150W64833	TUYAU HYDRAULIQUE BLEU L=2150	BLAUER HYDRAULIKSCHLAUCH L=215	
29	F01020051R	VITE M6X1X90 U5737 8.8ZN	SCR. M6X1X90 U5737 8.8ZN	VIS M6X 1X 90 U5737 8.8 ZN	SCHRAUBE M6X 1X90 U5737 8.8 ZN	TORNILLO M6X 1X90 U5737 8.8 ZN
30	B0H000009R	RACC. L 10 SOLO COR RASTELLI	UNION ELBOW 10	RACCORD L 10 SEULEMENT CORP	ANSCHLUSSSTUECK L 10	
31	B0H400090R	MARTINETTO PORTELLONE 180	TAILGATE JACK 180	VERIN PORTE ARRIERE 180	HECKKLAPPENZYLINDER 180	
32	F01100011R	ING.M 6X1 7663-A 9SMNPB28 ZN	GREASE NIPPLE M6X1 7663-A ZN	GRAISS. A BILLE M6X1 7663A ZN	SCHMIERBUECHE M6X1 7663-A ZN	ENGRAS. DE ESFE. M6X1 7663-AZN
33	F01020082R	VITE M8X1,25X65 U5737 8.8ZN	SCR. M8X1,25X65 U5737 8.8ZN	VIS M8X1,25X65 U5737 8.8 ZN	SCHRA. M8X1,25X65 U5737 8.8 ZN	TORN. M8X1,25X65 U5737 8.8 ZN
34	B07S01080R	SICUREZZA PORTELLONE	TAILGATE SAFETY DEVICE	SURETE PORTE EN ARRIERE	HECKKLAPPENSICHERUNG	
35	B0H000009R	RACC. L 10 SOLO COR RASTELLI	UNION ELBOW 10	RACCORD L 10 SEULEMENT CORP	ANSCHLUSSSTUECK L 10	
36	B0H400088R	MARTINETTO PRESSIONE 180	PRESSURE JACK 180	VERIN PRESSION 180	PRESSZYLINDER 180	
37	F01100013R	ING.M 6X1 7663-C 9SMNPB28 ZN	SPHERE NIPPLE M6X1 90	GRAISSEUR A BILLES M6X1 90	KUGELFETTBSCHSE M6X1 90	ENGRASADOR DE ESFERAS M6X1
38	F01100011R	ING.M 6X1 7663-A 9SMNPB28 ZN	GREASE NIPPLE M6X1 7663-A ZN	GRAISS. A BILLE M6X1 7663A ZN	SCHMIERBUECHE M6X1 7663-A ZN	ENGRAS. DE ESFE. M6X1 7663-AZN
39	B01700035R	ANEL. D ARR. ALB. 35-E UNI3653	SEEGER RING	BAGUE SEEGER	SEEGERRING 35-E	
40	B04933201R	GUAR. H126909-28442-29644-300	GASKET H126909-28442-29644-300	JEU DE JOINTS	KIT ZYLINDERDICHTUNGEN	
43	B07S00930R	GANCIO PORTELLONE	TAILGATE HOOK	CROCHET DE LA PORTE	HECKSCHWINGTUR HAKEN	
44	B07S00936R	SPINA MARTINETTO PRESS.BALLA	JACK PIN	AXE VERIN	ZYLINDERBOLZEN	
45	F01020440R	VITE M8X1,25X25 U5739 8.8ZN	SCR. M8X1,25X25 U5739 8.8ZN	VIS M8X1,25X25 U5739 8.8 ZN	SCHRAUBE M8X1,25X25U5739 8.8ZN	TORNIL.M8X1,25X25 U5739 8.8 ZN
46	B04200610R	INGRASS.A SFERE M6X1 LUNGO	GREASE NIPPLE	GRAISSEUR HYDRAULIQUE	GERADER SCHMIERNIPPEL M6X1	
47	B07S01051R	SPINA MARTINETTO PORTELLONE	TAILGATE JACK PIN	AXE VERIN PORTE EN ARRIERE	HECKSCHINGTUR WINDE KAPFEN	
48	F01020440R	VITE M8X1,25X25 U5739 8.8ZN	SCR. M8X1,25X25 U5739 8.8ZN	VIS M8X1,25X25 U5739 8.8 ZN	SCHRAUBE M8X1,25X25U5739 8.8ZN	TORNIL.M8X1,25X25 U5739 8.8 ZN
49	B01826161R	MOLLA CONTRASTO RULLO	SPRING	RESSORT	FEDER	
50	B01700020R	ANEL. D ARR. ALB. 20-E UNI3653	SEEGER RING	BAGUE SEEGER	SEEGERRING 20-E	
51	B00545168R	OCCHIOLO PER TENDITORI M12-DX	EYELET M12	OEIL M12	OSE M12	
52	B01300612R	DISTANZIALE 30,5X42X45	SPACER	ENTRETOISE	DISTANZSTUECK 30,5X42X45	
53	F02050112R	ANELLO E.DE 30X 1,5 U7435 ZN	SEEGER RING 30X 1,5 U7435 C70	SEEGER E. 30 X 1,5 U7435 C70	SEEGERING E. 30X 1,5 U7435 C70	ANILLO E. 30 X 1,5 U7435 C70
54	F01020577R	VIT.M16X 2X 70 U5739 8.8 ZN	SCREW M16X 2X 70 U5739 8.8			
55	F02050112R	ANELLO E.DE 30X 1,5 U7435 ZN	SEEGER RING 30X 1,5 U7435 C70	SEEGER E. 30 X 1,5 U7435 C70	SEEGERING E. 30X 1,5 U7435 C70	ANILLO E. 30 X 1,5 U7435 C70
56	B0H400060R	KIT GUARNIZIONI MARTIN H400053	KIT CYLINDER JOINTS	KIT JOINTS POUR VERIN	KIT ZYLINDERDICHTUNGEN FUR H40	

TAV_310

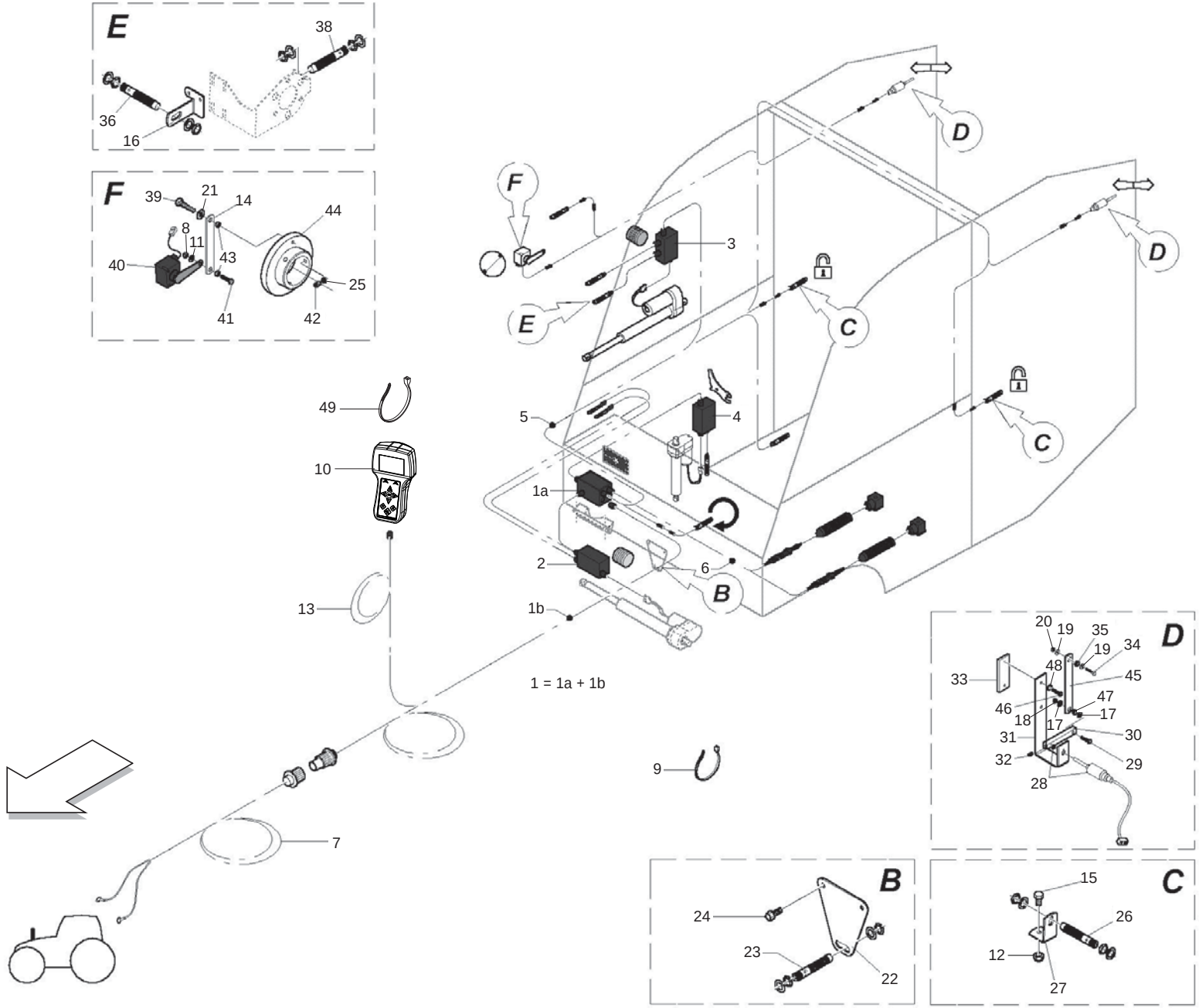
E
38
36
16
F
39
21
14
44
8
11
40
43
25
41
42
D
F
3
E
C
49
5
4
10
1a
2
6
B
13
1b
1 = 1a + 1b
9
7
D
20
19
35
19
34
48
33
45
47
46
17
18
17
31
30
32
29
28
B
24
23
22
C
15
26
12
27

CABLAGGIO
CONTROL SYSTEM

TAV_310

Pos.	Cod.	Descrizione	Description	Description	Benennung	Descripcion
1	B0E0P0002R	MOD.POW.BOX CON CAVI	POWER BOX MODULE WITH CONNECTI	MODULE POWER BOX AVEC ATTEL. C	MODULE KONTROLLBOX	
2	B0E0P0003R	MOD.FILO COMPL.DI SENSORI M8	TWINE MODULE COMPLETE WITH SEN	MODULE FICELLE COMPLET AVEC CA	MODULE GARN	
3	B0E0P0004R	MODULO RETE	NET MODULE WITH CONNECTION C6P	MODULE FILET AVEC ATTELAGE C6P	MODULE NETZ MIT ANSCHLUSS	
4	B0E0P0005R	MODULO CUT CON ATTACCO C6P0085	CUT MODULE WITH CONNECTION C6P	MODULE CUT AVEC ATTELAGE C6P00	MODULE CUT MIT ASCHLUSS	
5	B0E0P0072R	CABLAGGIO MACCHINA	BUS	BUS	BUS FUER HALL EFFEKT	
6	B0E0P0009R	CABLAGGIO BUS AUSILIARIO	AUXILIARY BUS	BUS AUXILIAIRE	BUS	
7	B0E0P0010R	CAVO TRATTORE	TRACTOR CABLE	CABLE TRACTEUR	KABEL SCHLEPPER	
8	B00920106R	DADO M6X1 D985 8ZN	NUT	ECROU	SELBSTSICHERNDE MUTTER M6-5S	
9	F05150055R	FASCETTA POLYA. 3,6X200 NERA	WHITE BAND	BANDE BIANCHE	WEIBE BAND	CINTA BLANCA
10	F05012085R	MON DISPLAY EASYTRONIC V2018	MON DISPLAY EASYTRONIC V2018			MON DISPLAY EASYTRONIC V2018
11	B01430620R	ROS.M6 6,4X 18X1,6 U6593 ZN	WASHER	RONDELLE	SCHEIBE	
12	F01230202R	DADO M10X 1,5 D985 8 ZN	NUT M10 D985	ECROU AUTOBL. M10	SELBSTSPERR.MUTTER M10	DADO AUTOBL. M10
13	B0E0P0065R	CABLAGGIO MACCHINA	TRACTOR MACHINE WIRING FOR POW	CABLAGE TRACTEUR	KABLE FUER TRAKTOR	
14	B0C004227R	PIATTO SPOSTAMENTO SENSORE	SENSOR SHIFTING PLATE	PLAT COURSE SENSEUR	SENSORVERSCHIEBERPLATTE	PLATO DE DESPLAZAMIENTO DEL
15	F01020470R	VITE M10X1,5X20 U5739 8.8ZN	SCR. M10X1,5X20 U5739 8.8ZN	VIS M10X1,5X20 U5739 8.8 ZN	SCHRAUBE M10X1,5X20 U5739 ZN	TORNILLOM10X1,5X20 U5739 8.8ZN
16	B0C004224R	SOSTEGNO PROSIMITI SOSTA RETE	NET COUNTER SENSOR SUPPORT	SUPPORT PROXIMITY	NETZSENSORHALTERUNG	
17	B01430620R	ROS.M6 6,4X 18X1,6 U6593 ZN	WASHER	RONDELLE	SCHEIBE	
18	B00920106R	DADO M6X1 D985 8ZN	NUT	ECROU	SELBSTSICHERNDE MUTTER M6-5S	
19	B01430620R	ROS.M6 6,4X 18X1,6 U6593 ZN	WASHER	RONDELLE	SCHEIBE	
20	B00920106R	DADO M6X1 D985 8ZN	NUT	ECROU	SELBSTSICHERNDE MUTTER M6-5S	
21	B01430620R	ROS.M6 6,4X 18X1,6 U6593 ZN	WASHER	RONDELLE	SCHEIBE	
22	B0C004246R	ATTACCO SENSORE PTO	PTO SENSOR ATTACHMENT	ATTELAGE CAPTEUR	PTO SENSOR ANSCHLUSS	
23	B0E0P0013R	SENS DIG.SCATOLA E BILANCERE	DIGITAL SENSOR PROXIMITY M12	CAPTEUR DIGITAL AVEC PROXIMITY	SENSOR MIT PROXIMITY M 12	
24	B00180625R	VITE M6X1X 25 U5739 8.8ZN	SCREW	VIS	SCHRAUBE	
25	B00920208R	DADO M8X1 D985 8ZN	NUT M8X1 D985 8ZN	ECROU	SELBSTSICHERNDE MUTTER M8-5S	
26	B0E0P0013R	SENS DIG.SCATOLA E BILANCERE	DIGITAL SENSOR PROXIMITY M12	CAPTEUR DIGITAL AVEC PROXIMITY	SENSOR MIT PROXIMITY M 12	
27	B0C1P1486R	SOSTEGNO SENSORE	SUPPORT SENSOR			
28	B0E0P0013R	SENS DIG.SCATOLA E BILANCERE	DIGITAL SENSOR PROXIMITY M12	CAPTEUR DIGITAL AVEC PROXIMITY	SENSOR MIT PROXIMITY M 12	
29	F01020408R	VITE M6X1X30 U5739 8.8ZN	SCR. M6X1X30 U5739 8.8ZN	VIS M 6X1X30	SCHRAUBE M 6X1X30	TORNILLO M 6X1X30
30	B0C004228R	PIATTIN0	PLATE	PETIT PLAT	PLATTE	
31	B0C004231R	ATTACCO POTENZIOMETRO	POTENZIOMETER ATTACHMENT	ATTELAGE POTENTIOMETRE	SENSORANSCHLUSS	
32	B00430610R	VITE STEI M 6X10-12.9 UNI 5	SCREW	VIS	SCHRAUBE STEI M6X10-12.9	
33	B0C004008R	PIASTRINA FINECORSA	LIMIT SWITCH PLATE	PLAQUETTE FIN DE COURSE	ENDSCHALTERPLATTE	
34	F01020413R	VITE M6X1X40 U5739 8.8ZN	SCR. M6X1X40 U5739 8.8ZN	VIS M 6X1X40	SCHRAUBE M 6X1X40	TORNILLO M 6X1X40
35	B01300866R	BOCCOLA DI MOVIMENTO	BUSH	DOUILLE	BUCHSE	
36	B0E000056R	SENSORE PROSSIMITA BALLA M12	PROXIMITY SENSOR	CAPTEUR DE PROXIMITE	ABSTANDSMELDER	
38	B0E000056R	SENSORE PROSSIMITA BALLA M12	PROXIMITY SENSOR	CAPTEUR DE PROXIMITE	ABSTANDSMELDER	
39	B00180615R	VITE TE UNI5739 8,8 M6X16 ZN B	SCREW	VIS	SCHRAUBE	
40	B0E0P0073R	SENS. ANG.AB91743 120 0.5-4.5V	POT SIZE BALE 60			
41	B00180660R	VITE ZINC.TE M 6X 60-8,8 U5739	SCREW ZN TE M 6X 60-8,8 U5739			
42	B00420820R	VITE ZINC.STEI M8X20-12.9 UNI	SCREW			
43	B01300866R	BOCCOLA DI MOVIMENTO	BUSH	DOUILLE	BUCHSE	
44	B01300871R	BUSSOLA PER BILANCIERE	COMPASS FOR ROCKER			
45	B0C004227R	PIATTO SPOSTAMENTO SENSORE	SENSOR SHIFTING PLATE	PLAT COURSE SENSEUR	SENSORVERSCHIEBERPLATTE	
46	F01020378R	VITE M5X0,8X16 U5739 8.8ZN	SCR. M5X0,8X16 U5739 8.8ZN	VIS M5X0,8X16 U5739 8.8ZN	SCHRAUBE M5X0,8X16 U5739 8.8ZN	TORNILLO M5X0,8X16 U5739 8.8ZN
47	B01300866R	BOCCOLA DI MOVIMENTO	BUSH	DOUILLE	BUCHSE	
48	F01420023R	ROS.M5 5,3X 15X1,5 U6593 ZN	WASHER M5 5,3X 15X1,5 U6593			
49	F02300061R	FASCETTA POLYA. 250X4,8 NERA	POLYA.FASTENING STRAPS 250X4,8			

TAV_320

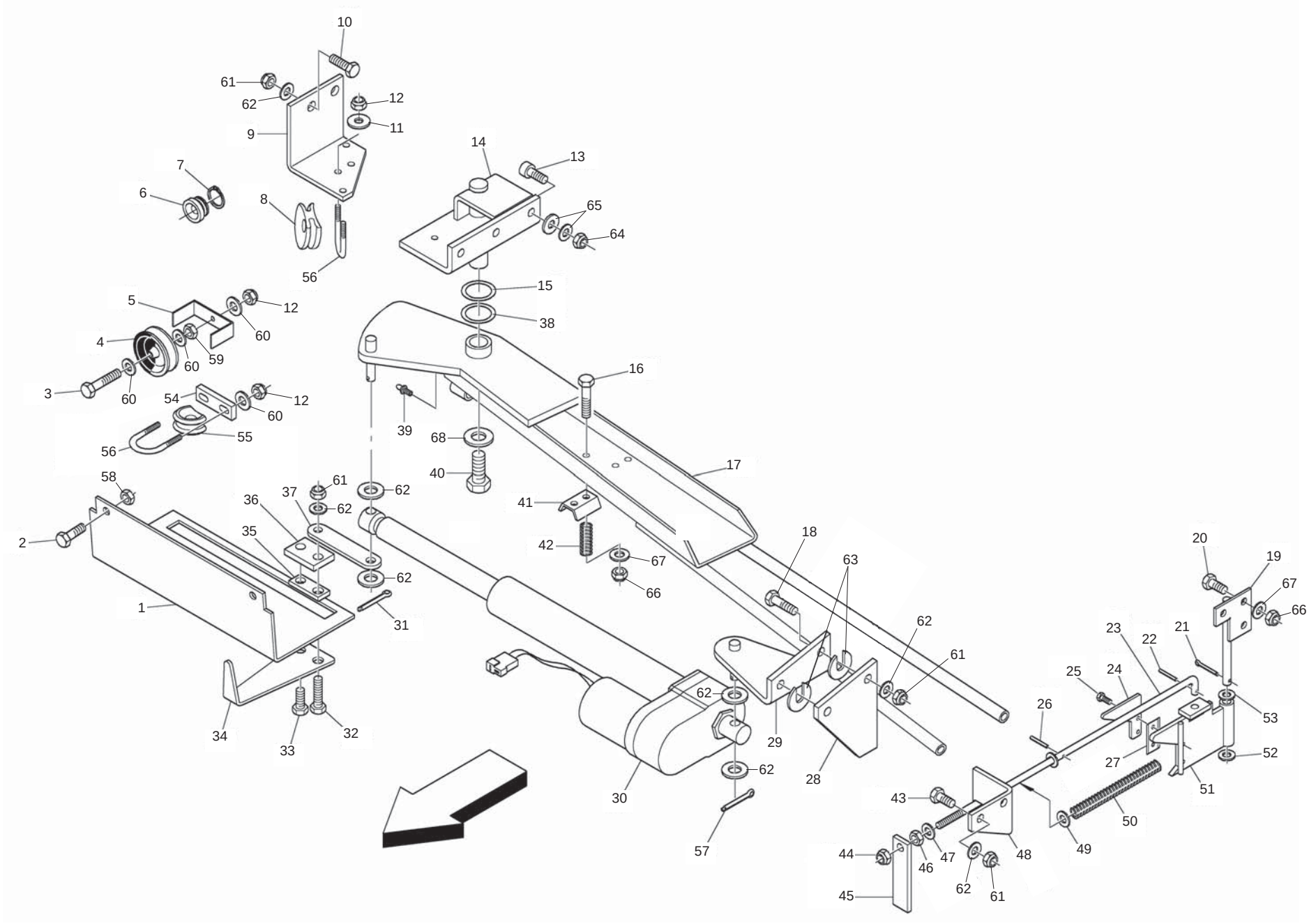

MASCHIO

cod. F07022343

LEGATORE FILO
TWINE BINDER

TAV_320

Pos.	Cod.	Descrizione	Description	Description	Benennung	Descripcion
1	B0C003181R	SOSTEGNO	SUPPORT	SUPPORT	HALTER	
2	F01020472R	VITE M10X1,5X25 U5739 8.8ZN	SCR. M10X1,5X25 U5739 8.8ZN	VIS M10X1,5X25 U5739 8.8 ZN	SCHRAUBE M10X1,5X25 U5739 8.8	TORNILLO 10X25 U5739 8.8 ZN
3	F01020413R	VITE M6X1X40 U5739 8.8ZN	SCR. M6X1X40 U5739 8.8ZN	VIS M 6X1X40	SCHRAUBE M 6X1X40	TORNILLO M 6X1X40
4	B03730455R	CARRUCOLA FILO RIF.333 60	PULLEY	POULIE AVECFIL REF.333 60	LAUFROLLE	
5	B0C230438R	FERMO	LOCK	ARRET	HALTER	
6	B03500097R	BUSSOLA PASSAGGIO SPAGO	TWINE GUIDE BUSH	DOUILLE PASSAGE FICELLE	SCHNURFUEHRUNGSBUCHSE	
7	F02050101R	ANELLO E. DE 25X 1,2 U7435 C7	SEEGER RING E. 25X1,2 7435 C70	SEEGER E. 25X 1,2 U7435 C70	SEEGERING E. 25X 1,2 U7435 C70	ANILLO E. 25X 1,2 U7435 C70
8	B0E428699R	PASSACAVO IN PORCELLANA	TWINE GUIDE EYELET	PASSECABLE PORCELAINE	PORZELLAN SCHNURFUHRUNGSOSE	
9	B0C003117R	ATTACCO PASSACAVI	FAIRLEAD COUPLING	ATTELAGE PASSE-CABLES	ANSCLHUSS	
10	F01020510R	VITE M12X1,75X30 U5739 8.8ZN	SCR. M12X1,75X30 U5739 8.8ZN	VIS M12X1,75X30 U5739 8.8ZN	SCHRAU.M12X1,75X30 U5739 8.8ZN	TORN. M12X1,75X30 U5739 8.8ZN
11	B01430620R	ROS.M6 6,4X 18X1,6 U6593 ZN	WASHER	RONDELLE	SCHEIBE	
12	B00920106R	DADO M6X1 D985 8ZN	NUT	ECROU	SELBSTSICHERNDE MUTTER M6-5S	
13	F01040112R	VITE M10X1,5X40 U5931 8.8ZN				
14	B07S00988R	FULCRO LEGATORE	TYING FULCRUM	POINT D APPUI LIAGE	BINDE DREHPUNKT	
15	B01300135R	SPES. 28 44 0,5	SHIM	ENTRETOISE	DISTANZSTUECK 28 44 0,5	
16	F01020068R	VITE M8X1,25X40 U5737 8.8ZN	SCR. M8X1,25X40 U5737 8.8ZN	VIS M 8X1,25X40 U5737 8.8 ZN	SCHRA. M8X1,25X40 U5737 8.8 ZN	TORNIL.M8X1,25X40 U5737 8.8 ZN
17	B07S00990R	BRACCIO LEGATORE A FILO	TYING ARM	BRAS LIAGE FICELLE	BINDEARM	
18	B00191250R	VITE M12X1,75X 50 U5737 8.8ZN	SCREW	VIS	SCHRAUBE	
19	B07S00987R	FULCRO LAMA	BLADE FULCRUM	POINT D APPUI LAME	KLINGENSCHWENKPUNKT	
20	F01020436R	VITE M8X1,25X20 U5739 8.8ZN	SCR. M8X1,25X20 U5739 8.8ZN	VIS M8X1,25X 20 U5739 8.8 ZN	SCHRAUBE M8X1,25X20U5739 8.8ZN	TORN. M8X1,25X20 U5739 8.8 ZN
21	B01110320R	SPINA ELAST. 3X 20 SS DIN 1481	PIN	GOUPILLE	STIFT	
22	B01110325R	SPINA ELAST. 3X 25 SS DIN 1481	PIN	GOUPILLE	STIFT	
23	B00500057R	ASTA REGOLATRICE	ADJUSTING BAR	BARRE DE REGLAGE	REGELUNG STANGE	
24	B0C002765R	FISSAGGIO LAMA	BLADE FASTERNER	FIXAGE LAME	KLINGENHALTERUNG	
25	F01020378R	VITE M5X0,8X16 U5739 8.8ZN	SCR. M5X0,8X16 U5739 8.8ZN	VIS M5X0,8X16 U5739 8.8ZN	SCHRAUBE M5X0,8X16 U5739 8.8ZN	TORNILLO M5X0,8X16 U5739 8.8ZN
26	B01110325R	SPINA ELAST. 3X 25 SS DIN 1481	PIN	GOUPILLE	STIFT	
27	F20120092R	LAMA LEGATORE FILO SP. 0,40	BLADE BINDER WIRE SP. 0,40			
28	B0C003123R	FERMO BRACCIO	ARM STOP	ARRET BRAS	ARMHALTER	
29	B07S01476R	ATT. ATTUATORE POTENZIOM	ACTUATOR SENSOR ATTACHMENT	ATTELAGE ACTIONNEUR POTENTIOME	E-MOTOR SENSOR ANSCHLUSS	
30	B0E000066R	ATTUATORE FILO	LINEAR ACTUATOR	ACTIONNEUR LINEAIRE	LINEARER E-MOTOR	
31	F02200195R	COPIGLIA 4X 30 U1336 ZN	SPLIT PIN 4 X30 U1336 ZN	GOUPILLE 4 X30 U1336 ZN	SPLINT 4 X30 U1336 ZN	CLAVIJA 4 X30 U1336 ZN
32	F01020514R	VITE M12X1,75X40 U5739 8.8ZN	SCR. M12X1,75X40 U5739 8.8ZN	VIS M12X1,75X40 U5739 8.8ZN	SCHRA. M12X1,75X40 U5739 8.8ZN	TORN. M12X1,75X40 U5739 8,8ZN
33	F01020508R	VITE M12X1,75X25 U5739 8.8ZN	SCR. M12X1,75X25 U5739 8.8ZN	VIS M12X1,75X25 U5739 8.8 ZN	SCHRAUBE M12X1,75X25U57398.8ZN	TORNIL.M12X1,75X25 U5739 8.8ZN
34	B0C003118R	SEGNALATORE	INDICATOR	INDICATEUR	ANZEIGER	
35	B0C003180R	GUIDA SEGNALATORE	INDICATOR GUIDE	GUIDE INDICATEUR	ANZEIGERFUEHRUNG	
36	B0C003185R	FERMO SEGNALATORE	INDICATOR STOP	ARRET INDICATEUR	ANZEIGERHALTER	
37	B0C003119R	DIST.IN LAMIERA	LINK	GALETTE	KEKS	
38	B01300136R	SPES. 28 44 1 ZINCATO	THICKNESS 28 44 1 GALV	ENTRETOISE	DISTANZSTUECK 28 44 1	
39	B04200610R	INGRASS.A SFERE M6X1 LUNGO	GREASE NIPPLE	GRAISSEUR HYDRAULIQUE	GERADER SCHMIERNIPPEL M6X1	
40	F01020562R	VITE M16X2X30 U5739 8.8ZN	SCR. M16X2X30 U5739 8.8ZN	VIS M16X2X30 U5739 8.8 ZN	SCHRAUBE M16X2X30 U5739 8.8 ZN	TORNILLO M16X2X30 U5739 8.8 ZN
41	B0C630434R	FRENA SPAGO	TWINE BRAKE	PINCE FICELLE	GARNBREMSE	
42	B01821993R	MOLLA	SPRING	RESSORT	FEDER	
43	F01020510R	VITE M12X1,75X30 U5739 8.8ZN	SCR. M12X1,75X30 U5739 8.8ZN	VIS M12X1,75X30 U5739 8.8ZN	SCHRAU.M12X1,75X30 U5739 8.8ZN	TORN. M12X1,75X30 U5739 8.8ZN
44	B00920208R	DADO M8X1 D985 8ZN	NUT M8X1 D985 8ZN	ECROU	SELBSTSICHERNDE MUTTER M8-5S	
45	B0C003115R	AGGANCIO TAGLIO	COUPLER	ACCROCHAGE COUPE	ANKOPPELUNGSVORRICHTUNG	
46	B00710208R	DADO M 8X1,25 U5588 6.8 ZN	NUT	ECROU	MUTTER M8-6S	
47	F01410051R	ROS.M8 8,4X 17X1,6 U6592 ZN	WASHER M8 8,4X17X1,6 U6592 ZN	RONDELLE M8 8,4X17X1,6 ZN	SCHEIBE M8 8,4X17X1,6 U6592 ZN	ARANDELA M8 8,4X17X1,6 U6592ZN
48	B0C003116R	SOSTEGNO ASTA	BAR SUPPORT	SUPPORT BARRE	STANGEHALTER	
49	F01410051R	ROS.M8 8,4X 17X1,6 U6592 ZN	WASHER M8 8,4X17X1,6 U6592 ZN	RONDELLE M8 8,4X17X1,6 ZN	SCHEIBE M8 8,4X17X1,6 U6592 ZN	ARANDELA M8 8,4X17X1,6 U6592ZN
50	B01800036R	MOLLA C FILO 1 L=203,5ZINCATA	C-SPRING	RESSORT C	C-FEDER	
51	B07S00986R	BRACCIO LAMA	BLADE ARM	BRAS LAME	KLINGE AULEGER	
52	F01410062R	ROS.M10 10,5X 18X 2 U6592 ZN	WASHER M10 10,5X 18X 2 U6592	RONDELLE M10 10,5X18X2 ZN	DICHTUNGSRING M10 10,5X18X2 ZN	RONDANA M10 10,5X18X2 ZN
53	F01410062R	ROS.M10 10,5X 18X 2 U6592 ZN	WASHER M10 10,5X 18X 2 U6592	RONDELLE M10 10,5X18X2 ZN	DICHTUNGSRING M10 10,5X18X2 ZN	RONDANA M10 10,5X18X2 ZN
54	B0C633069R	SPES. PASSAFILO	TWINE GUIDE SHIM	EPAISSEUR PASSE-FIL	GARNFUEHRUNGSDISTANZSCHEIBE	
55	B0E428699R	PASSACAVO IN PORCELLANA	TWINE GUIDE EYELET	PASSECABLE PORCELAINE	PORZELLAN SCHNURFUHRUNGSOSE	
56	B0C228700R	CAVALLOTTO PASSACAVO	CABLE GUIDE BRACKET	BOULON PASSE-CABLE	KABEL BUEGELBOLZEN	
57	F02200195R	COPIGLIA 4X 30 U1336 ZN	SPLIT PIN 4 X30 U1336 ZN	GOUPILLE 4 X30 U1336 ZN	SPLINT 4 X30 U1336 ZN	CLAVIJA 4 X30 U1336 ZN

TAV_320

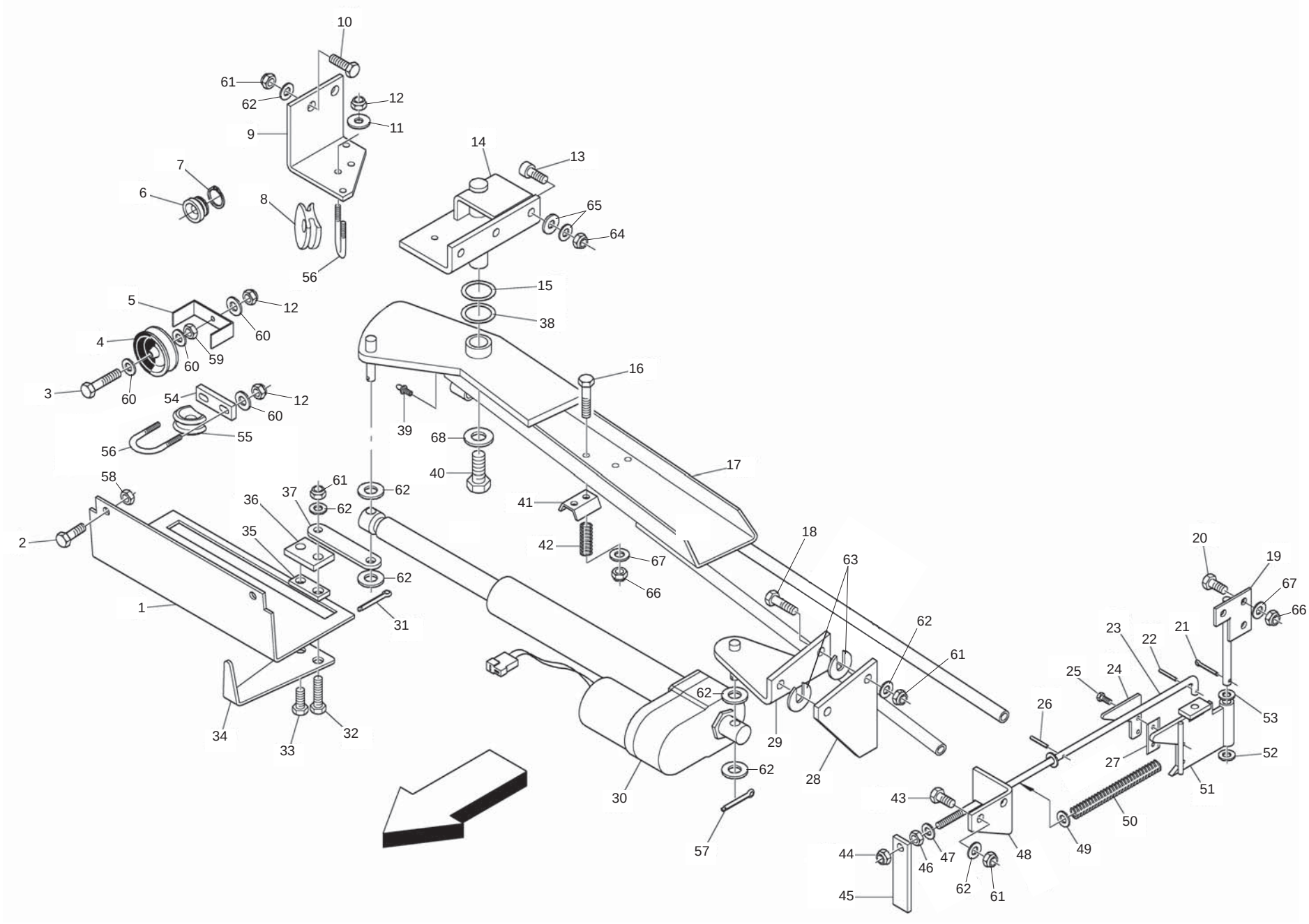

MASCHIO

cod. F07022343

LEGATORE FILO
TWINE BINDER

TAV_320

Pos.	Cod.	Descrizione	Description	Description	Benennung	Descripcion
58	F01230202R	DADO M10X 1,5 D985 8 ZN	NUT M10 D985	ECROU AUTOBL. M10	SELBSTSPERR.MUTTER M10	DADO AUTOBL. M10
59	F01200232R	DADO M6X1 U5588 CL8 ZN	NUT M6X1 U5588 6.8ZN	ECROU 6 UNI 5588 6.8 ZN	MUTTER 6 UNI 5588 6.8 ZN	TUERCA 6 UNI 5588 6.8 ZN
60	F01410037R	ROS.M6 6,4X12,5X1,6 U6592 ZN	WASHER M6 6,4X12,5X1,6 U6592ZN	RONDEL.M6 6,4X12,5X1,6 U6592ZN	SCHEIB.M6 6,4X12,5X1,6 U6592ZN	ARAND.M6 6,4X12,5X1,6 U6592 ZN
61	F01230213R	DADO M12X1,75 U7474 CL8 ZN	NUT M12X1,75 U7474 6SZN	ECROU AUTOBL. M12	SELBSTSPERR.MUTTER M12	DADO AUTOBL. M12
62	B01421230R	ROS.M12 13X 20X2,0 U1749 ZN	WASHER	RONDELLE	SCHEIBE	
63	B01516039R	SPES. 15 42 0,8	SPACER	ENTRETOISE	SCHEIBE	
64	F01230202R	DADO M10X 1,5 D985 8 ZN	NUT M10 D985	ECROU AUTOBL. M10	SELBSTSPERR.MUTTER M10	DADO AUTOBL. M10
65	F01410062R	ROS.M10 10,5X 18X 2 U6592 ZN	WASHER M10 10,5X 18X 2 U6592	RONDELLE M10 10,5X18X2 ZN	DICHTUNGSRING M10 10,5X18X2 ZN	RONDANA M10 10,5X18X2 ZN
66	B00920208R	DADO M8X1 D985 8ZN	NUT M8X1 D985 8ZN	ECROU	SELBSTSICHERNDE MUTTER M8-5S	
67	F01410051R	ROS.M8 8,4X 17X1,6 U6592 ZN	WASHER M8 8,4X17X1,6 U6592 ZN	RONDELLE M8 8,4X17X1,6 ZN	SCHEIBE M8 8,4X17X1,6 U6592 ZN	ARANDELA M8 8,4X17X1,6 U6592ZN
68	B01519319R	RALLA 16X38X5	FIFTH WHEEL	BUTEE	SCREIBE	

TAV_330

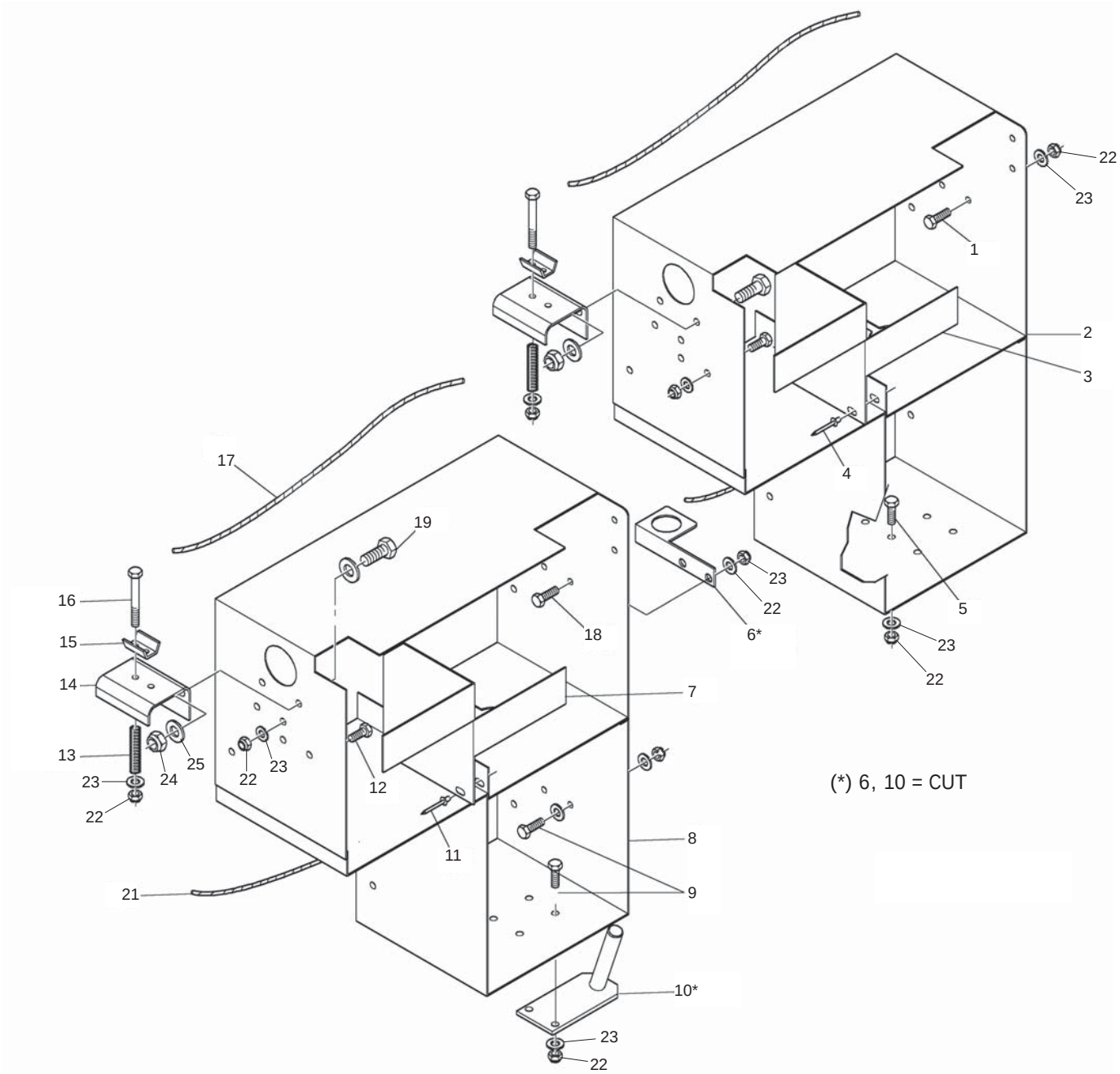
22
23
1
2
3
4
5
23
22
6*
23
22
17
19
16
15
14
13
23
22
24
25
22
23
12
18
7
11
8
9
21
10*
23
22
(*) 6, 10 = CUT

LEGATORE FILO: CASSONETTO
TWINE BINDER: TWINE BOX

TAV_330

Pos.	Cod.	Descrizione	Description	Description	Benennung	Descripcion
1	F01020436R	VITE M8X1,25X20 U5739 8.8ZN	SCR. M8X1,25X20 U5739 8.8ZN	VIS M8X1,25X 20 U5739 8.8 ZN	SCHRAUBE M8X1,25X20U5739 8.8ZN	TORN. M8X1,25X20 U5739 8.8 ZN
2	B07S00661R	CASSONETTO PORTASPAGO	TWINE HOUSING	CAISSE PORTE FICELLE	GARNAUFNAHMEKASTEN	
3	B0C003237R	SEPARATORE ROTOLI	ROLLS SEPARATOR	SEPARATEUR ROULEAUX	ROTORENSCHEIDER	
4	F02250111R	RIVETTO STR. 4 X 6 U9200A AL	RIVET 4 X6	RIVET 4 X6	KUPFERNIET 4 X6	REMACHE 4 X6
5	F01020436R	VITE M8X1,25X20 U5739 8.8ZN	SCR. M8X1,25X20 U5739 8.8ZN	VIS M8X1,25X 20 U5739 8.8 ZN	SCHRAUBE M8X1,25X20U5739 8.8ZN	TORN. M8X1,25X20 U5739 8.8 ZN
6	B0C003239R	FERMO MANOVELLA	LOCK HANDLE	ARRET MANIVELLE	KURBELBEFESTIGER	
7	B0C003237R	SEPARATORE ROTOLI	ROLLS SEPARATOR	SEPARATEUR ROULEAUX	ROTORENSCHEIDER	
8	B07S00661R	CASSONETTO PORTASPAGO	TWINE HOUSING	CAISSE PORTE FICELLE	GARNAUFNAHMEKASTEN	
9	F01020436R	VITE M8X1,25X20 U5739 8.8ZN	SCR. M8X1,25X20 U5739 8.8ZN	VIS M8X1,25X 20 U5739 8.8 ZN	SCHRAUBE M8X1,25X20U5739 8.8ZN	TORN. M8X1,25X20 U5739 8.8 ZN
10	B07S01032R	SOSTEGNO MANOVELLA	HANDLE SUPPORT	SUPPORT MANIVELLE	KURBELSTUETZE	
11	F02250111R	RIVETTO STR. 4 X 6 U9200A AL	RIVET 4 X6	RIVET 4 X6	KUPFERNIET 4 X6	REMACHE 4 X6
12	F01020436R	VITE M8X1,25X20 U5739 8.8ZN	SCR. M8X1,25X20 U5739 8.8ZN	VIS M8X1,25X 20 U5739 8.8 ZN	SCHRAUBE M8X1,25X20U5739 8.8ZN	TORN. M8X1,25X20 U5739 8.8 ZN
13	B01812161R	MOLLA C FILO 1 L=68,5	SPRING	RESSORT	FEDER	
14	B0C531192R	SUPP. FRENA SPAGO	TWINE LOCKING SUPPORT	SUPPORT FREIN-FICELLE	GARNBREMSENHALTER	
15	B0C627148R	FRENO SPAGO	TWINE BRAKE	PINCE FICELLE	GARNBREMSE	
16	B00190890R	VITE M 8X1,25X 90 U5737 8.8ZN	SCREW	VIS	SCHRAUBE	
17	B07V00068R	FUNE ELASTICA DIAM.6 - L=650	ELASTIC ROPE L=650	CABLE ELASTIQUE 6 L=650	ELASTISCHSEIL 6 L=650	
18	F01020436R	VITE M8X1,25X20 U5739 8.8ZN	SCR. M8X1,25X20 U5739 8.8ZN	VIS M8X1,25X 20 U5739 8.8 ZN	SCHRAUBE M8X1,25X20U5739 8.8ZN	TORN. M8X1,25X20 U5739 8.8 ZN
19	F01020436R	VITE M8X1,25X20 U5739 8.8ZN	SCR. M8X1,25X20 U5739 8.8ZN	VIS M8X1,25X 20 U5739 8.8 ZN	SCHRAUBE M8X1,25X20U5739 8.8ZN	TORN. M8X1,25X20 U5739 8.8 ZN
21	B07V00069R	FUNE ELASTICA DIAN.6 - L=350	ELASTIC ROPE L=350	CABLE ELASTIQUE 6 L=350	ELASTISCHSEIL 6 L=350	
22	B00920208R	DADO M8X1 D985 8ZN	NUT M8X1 D985 8ZN	ECROU	SELBSTSICHERNDE MUTTER M8-5S	
23	F01410051R	ROS.M8 8,4X 17X1,6 U6592 ZN	WASHER M8 8,4X17X1,6 U6592 ZN	RONDELLE M8 8,4X17X1,6 ZN	SCHEIBE M8 8,4X17X1,6 U6592 ZN	ARANDELA M8 8,4X17X1,6 U6592ZN
24	F01230202R	DADO M10X 1,5 D985 8 ZN	NUT M10 D985	ECROU AUTOBL. M10	SELBSTSPERR.MUTTER M10	DADO AUTOBL. M10
25	F01410062R	ROS.M10 10,5X 18X 2 U6592 ZN	WASHER M10 10,5X 18X 2 U6592	RONDELLE M10 10,5X18X2 ZN	DICHTUNGSRING M10 10,5X18X2 ZN	RONDANA M10 10,5X18X2 ZN

TAV_340

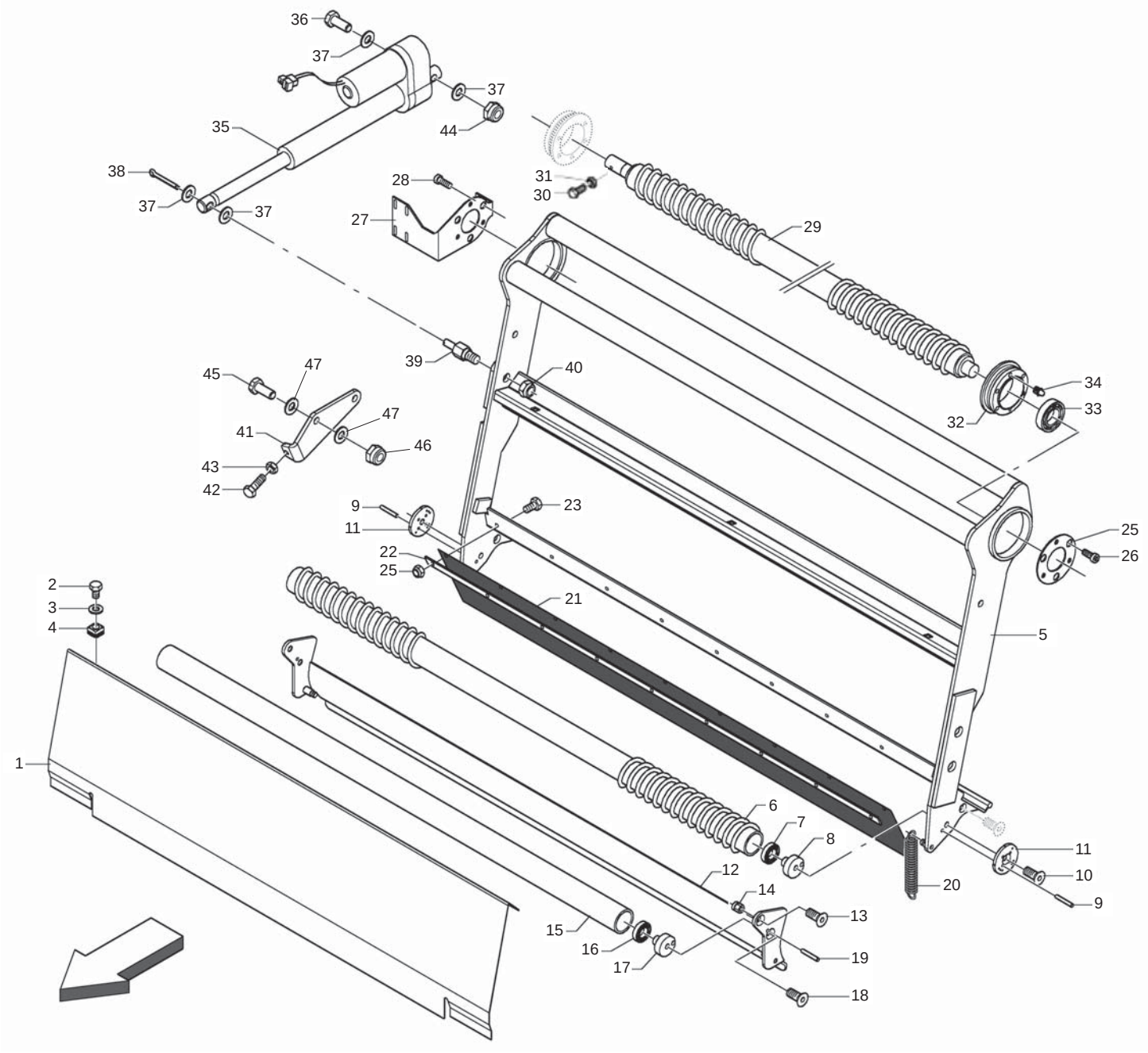

MASCHIO

cod. F07022343

LEGATORE RETE (PARTE 1)
NET BINDER (PART 1)

TAV_340

Pos.	Cod.	Descrizione	Description	Description	Benennung	Descripcion
1	B0C3P0035R	PROT. PORTARETE	NET HOLDER PROTECTION	PROTECTION PORTE FILET	SCHUETZ NETZHALTER	
2	F01020432R	VITE M8X1,25X16 U5739 8.8ZN	SCR. M8X1,25X16 U5739 8.8ZN	VIS M8 X1,25X16 U5739 8.8 ZN	SCHRAUBE M8X1,25X16U5739 8.8ZN	TORNILLO M8X1,25X16U5739 8.8ZN
3	F01410051R	ROS.M8 8,4X 17X1,6 U6592 ZN	WASHER M8 8,4X17X1,6 U6592 ZN	RONDELLE M8 8,4X17X1,6 ZN	SCHEIBE M8 8,4X17X1,6 U6592 ZN	ARANDELA M8 8,4X17X1,6 U6592ZN
4	B00990003R	DADO TIPO C 4808-BM8X1,25	NUT	ECROU	MUTTER	
5	B07SP0090R	BRACCIO PORTARETE	NET HOLDER ARM	BRAS PORTE FILET	NETZHALTERARM	
6	B07S00648R	RULLO FOLLE RETE	IDLE ROLLER	ROULEAU FOU	UMLENKWALZE	
7	B02301716R	CUSC. 2203 E-2RS1TN9 RIF.SKF	BEARING	ROULEMENT	LAGER 2203 E-2RS1TN9 RIF. SKF	
8	B035P0008R	PERNO RULLO FOLLE NEW	NEW IDLE ROLLER PIN	TOURILLON ROULEAU FOU NEW	BOLZEN UMLENKWALZE	
9	F02100079R	SPINA E.P. 5X20 U6873 C70 BR	PIN EL. 5X20 U6873 C70 BR			
10	B00441025R	VITE TSPEI M10X 25-10.9 UNI59	SCREW	VIS	SCHRAUBE VERZINKT TSPEI M10X25	
11	B013P0128R	RALLA DI FERMO	STOP FIFTH WHEEL	EXCENTRIQUES	DISTANZSCHEIBE	
12	B07SP0286R	PINZA RETE	NET CLAMP	ETRIER FILET	NETZZANGE	
13	B00441020R	VITE TSPEI M10X 20-10.9 UNI 5	SCREW	VIS	SCHRAUBE TSPEI M10X 20-10.9	
14	B01300401R	BUSSOLA FILETTATA	PIN WITHOUT NET	DOUILLE FILETEE	NETZAUFNAHMEZANGENBOLZEN	
15	B07SP0100R	CORPO RULLO FOLLE LISCIO	SMOOTH IDLE ROLLER BODY	CORPS ROULEAU FOU LISSE	GEHAUSE DER GLATTLOSWALZE	
16	B02301716R	CUSC. 2203 E-2RS1TN9 RIF.SKF	BEARING	ROULEMENT	LAGER 2203 E-2RS1TN9 RIF. SKF	
17	B035P0008R	PERNO RULLO FOLLE NEW	NEW IDLE ROLLER PIN	TOURILLON ROULEAU FOU NEW	BOLZEN UMLENKWALZE	
18	B00441020R	VITE TSPEI M10X 20-10.9 UNI 5	SCREW	VIS	SCHRAUBE TSPEI M10X 20-10.9	
19	B01110612R	SPINA ELAST. 6X 12 SS DIN 1481	PIN	GOUPILLE	STIFT	
20	B01800025R	MOLLA 2 13 98T GRUPPO RETE	SPRING	RESSORT	FEDER	
21	B07VP0001R	BANDELLA DI SOSTEGNO	SUPPORT BAND	BANDE DE SUPPORT	HALTERBANDE	
22	B0C2P0020R	PREMIGOMMA	RUBBER HOLDER	PRESSE-CAOUTCHOUC	GUMMIDRUCKER	
23	B00180620R	VITE M6X1X20 U5739 8.8ZN	SCREW	VIS	SCHRAUBE	
25	B01300389R	FLANGIA DI CONTEGNO	FLANGE	FLASQUE	DICHTUNGSFLANSCH	
26	B00400825R	VITE M8X1,25X25 U5931 10.9ZD	SCREW	VIS	SCHRAUBE	
27	B0C002076R	PIASTRA DX RITEGNO	RIGHT PLATE	PLAQUE DROITE	RECHTE HALTEPLATTE	
28	B00400825R	VITE M8X1,25X25 U5931 10.9ZD	SCREW	VIS	SCHRAUBE	
29	B07S00649R	RULLO CONTARETE	NET COUNTER ROLLER	ROULEAU COMPTE-FILET	NETZZAHLERWALZE	
30	B0E000018R	MAGNETE TONDO 22 M5 L=20	ROUND MAGNET 22 M5 L	AIMANT RONDE 22 M5 L=20	RUNDER MAGNET 22 M5 L	
31	F01200220R	DADO M5X0,8 U5588 CL8 ZN	NUT M5X0,8 U5588 6.8ZN	ECROU 5 UNI 5588 6.8 ZN	MUTTER 5 UNI 5588 6.8 ZN	TUERCA 5 UNI 5588 6.8 ZN
32	B02700044R	SUPP BRAC PORTA RETE E RULLO	NET AND ROLLER ARM SUPPORT	SUPPORT BRAS PORTE-FILET ET RO	LAGER DES NETZTRAGERARMS UND W	
33	B02042517R	CUSC 6305-2RS CAT.B-ST004	BEARING	ROULEMENT	LAGER 6305-2RS	
34	F01100048R	ING.M 8X1,25 7663A 9SMNPB28 Z	GREASE NIPPLE M8X1,25 U7663A	GRAISSEUR A BILLES M8X1,25	SCHMIERBUECHSE M8X1,25 7663A	ENGRAS. DE ESFERAS M8 X 1,25 A
35	B0E000045R	ATTUATORE RETE	NET ACTUATOR	ACTIONNEUR WARNER D13-05B5-06	AKTUATOR WARNER D13 05B506111	
36	F01020164R	VITE M12X1,75X70 U5737 8.8ZN	SCREW M12X1,75X70 U5737 8.8ZN	VIS M12X1,75X70 ZN	SCHR. M12X1,75X70 U5737 8.8 ZN	TORN. M12X1,75X70 U5737 8.8 ZN
37	B01421230R	ROS.M12 13X 20X2,0 U1749 ZN	WASHER	RONDELLE	SCHEIBE	
38	F02200164R	COPIGLIA 3X 30 U1336 ZN	SPLIT PIN 3X 30 U1336 ZN			
39	B03500063R	PERNO ECCENTRICO	ECCENTRIC PIN	TOURILLON EXCENTRE	EXZENTERZAPFEN	
40	B00920516R	DADO M16X 1,5 D985 6S ZN	NUT M16X1,5 D985 6S ZN	ECROU	SELBSTSICHERNDE MUTTER M16-5S	
41	B0C4P0009R	FERMO	LOCK	ARRET	BLOCK	
42	F01020517R	VITE M12X1,75X50 U5739 8.8ZN	SCR. M12X1,75X50 U5739 8.8ZN	VIS M12X1,75X50 5739 8.8 ZN	SCHRA. M12X1,75X50 5739 8.8 ZN	TORN. M12X1,75X50 5739 8.8 ZN
43	F01200293R	DADO M12X1,75 U5588 CL8 ZN	NUT M12X1,75 U5588 6S ZN	ECROU M12X1,75 U5588 6S ZN	MUTTER M12X1,75 U5588 6S ZN	TUERCA M12X1,75 U5588 6S ZN
44	F01230213R	DADO M12X1,75 U7474 CL8 ZN	NUT M12X1,75 U7474 6SZN	ECROU AUTOBL. M12	SELBSTSPERR.MUTTER M12	DADO AUTOBL. M12
45	B00471025R	VITE TTEI M10X 25-8.8 UNBRA	SCREW	VIS	SCHRAUBE TTEI M10X 25-8.8	
46	F01230202R	DADO M10X 1,5 D985 8 ZN	NUT M10 D985	ECROU AUTOBL. M10	SELBSTSPERR.MUTTER M10	DADO AUTOBL. M10
47	F01410062R	ROS.M10 10,5X 18X 2 U6592 ZN	WASHER M10 10,5X 18X 2 U6592	RONDELLE M10 10,5X18X2 ZN	DICHTUNGSRING M10 10,5X18X2 ZN	RONDANA M10 10,5X18X2 ZN

TAV_350

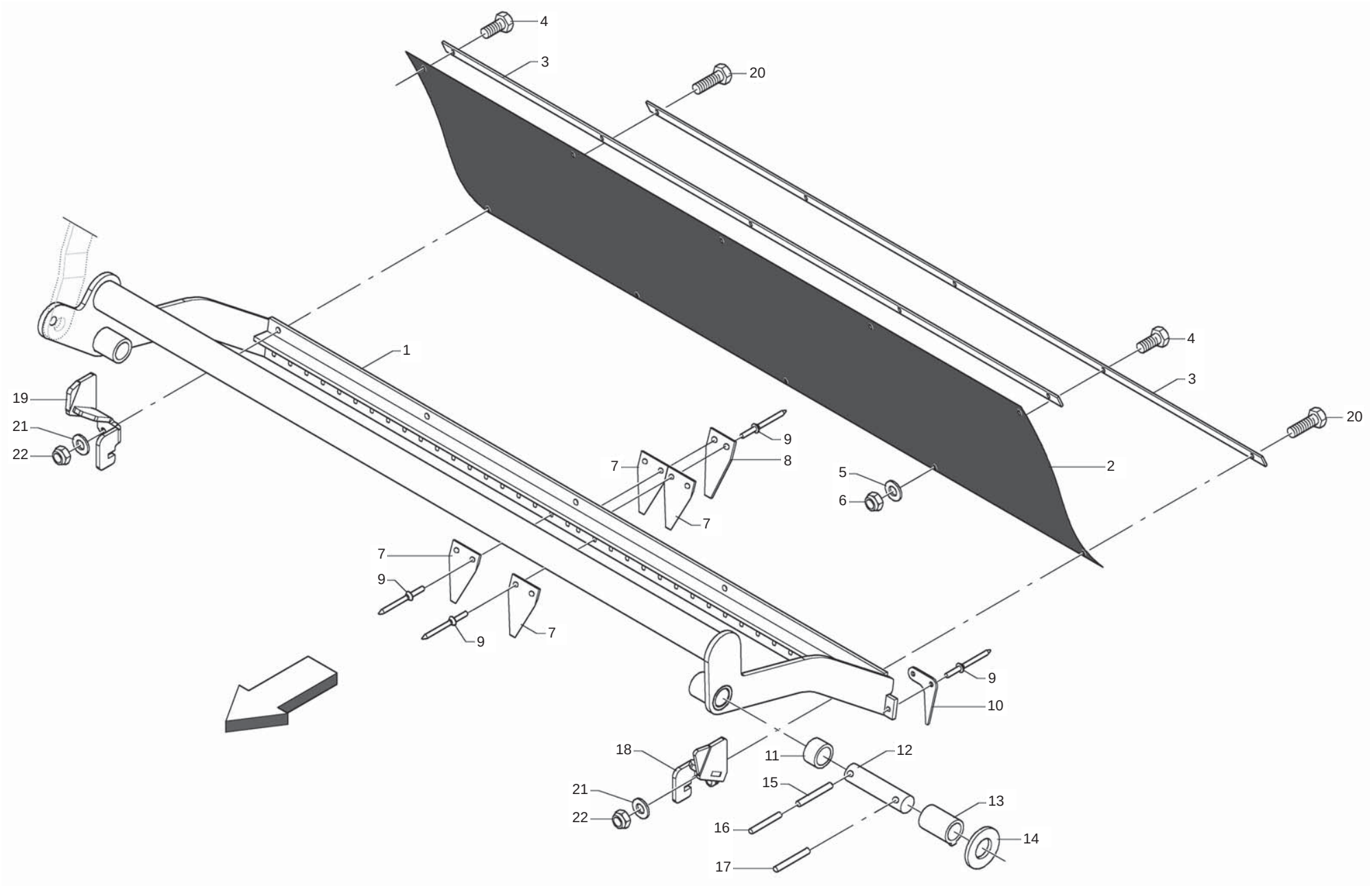

MASCHIO

cod. F07022343

LEGATORE RETE (PARTE 2)
NET BINDER (PART 2)

TAV_350

Pos.	Cod.	Descrizione	Description	Description	Benennung	Descripcion
1	B07SP0279R	BRACCIO LAMA	KNIVE HARM	BRAS COUTEAUX	KLINGEARM	
2	B07VP0010R	CHIUSURA IN TELA PER LAMA	CLOTH CLOSURE FOR BLADE	FERMETURE EN TOILE POUR LAME	VERSCHLUSS AUS TUCH FUER KLING	
3	B0C002398R	PREMIGOMMA	RUBBERHOLDER	PRESSE-PNEU	GUMMIHALTERLEISTE	
4	B00180620R	VITE M6X1X20 U5739 8.8ZN	SCREW	VIS	SCHRAUBE	
5	F01410037R	ROS.M6 6,4X12,5X1,6 U6592 ZN	WASHER M6 6,4X12,5X1,6 U6592ZN	RONDEL.M6 6,4X12,5X1,6 U6592ZN	SCHEIB.M6 6,4X12,5X1,6 U6592ZN	ARAND.M6 6,4X12,5X1,6 U6592 ZN
6	B00920106R	DADO M6X1 D985 8ZN	NUT	ECROU	SELBSTSICHERNDE MUTTER M6-5S	
7	B07U00012R	LAMINO RASSPE D200 LISCIA	PLATE RASPE D200	PETITE LAME DE COUPE FILET		
8	B0C6P0334R	COMPENSO LAMINI SU BRACCIO LAM	SHIM	EPAISSEUR	DICHTUNG	
9	B01000013R	RIVETTO STR. 6X18 U9200A AL	RIVET	RIVET	ABREISSNIETEN 6X18	
10	B0C6P0050R	TERMINALE LAMA	BLADE END	TERMINAL LAME	KLINGE ENDE	
11	B013C0012R	DISTANZIALE 25.5X33.7X20	SPACER	ENTRETOISE	DISTANZSTUECK	
12	B01300390R	SPINA SX BRACCIO TAGLIA RETE	ARM LEFT PIN	EPINE GAUCHE BRAS COUPE-FILET	LINKER NETZSCHNEIDEVORRICHTUNG	
13	B02526852R	BUSSOLA NYLON	NYLON BUSH	GALET	BUCHSE	
14	B01522663R	SPES. 25 45	SHIM	ENTRETOISE	SCHEIBE	
15	F02100090R	SPINA E.P. 5X 40 U6873 C70 BR	ELASTIC PIN 5X40	GOUJON ELASTIQUE 5X40	SPANNHUELSE 5X40	ESPINA ELASTICA 5X40
16	F02100142R	SPINA E.P. 8X 40 U6873 C70 BR	ELASTIC PIN 8X40	GOUJON ELASTIQUE 8X40	SPANNHUELSE 8X40	ESPINA ELASTICA 8X40
17	F02100142R	SPINA E.P. 8X 40 U6873 C70 BR	ELASTIC PIN 8X40	GOUJON ELASTIQUE 8X40	SPANNHUELSE 8X40	ESPINA ELASTICA 8X40
18	B07SP0245R	FERMO DESTRO ALZO	RIGH STOP	ARRET DROIT	BLOCK RECHTS	
19	B07SP0246R	FERMO SINISTRO ALZO	LEFT STOP	ARRET GAUCHE	BLOCK LINKS	
20	F01020408R	VITE M6X1X30 U5739 8.8ZN	SCR. M6X1X30 U5739 8.8ZN	VIS M 6X1X30	SCHRAUBE M 6X1X30	TORNILLO M 6X1X30
21	F01410037R	ROS.M6 6,4X12,5X1,6 U6592 ZN	WASHER M6 6,4X12,5X1,6 U6592ZN	RONDEL.M6 6,4X12,5X1,6 U6592ZN	SCHEIB.M6 6,4X12,5X1,6 U6592ZN	ARAND.M6 6,4X12,5X1,6 U6592 ZN
22	B00920106R	DADO M6X1 D985 8ZN	NUT	ECROU	SELBSTSICHERNDE MUTTER M6-5S	

TAV_360

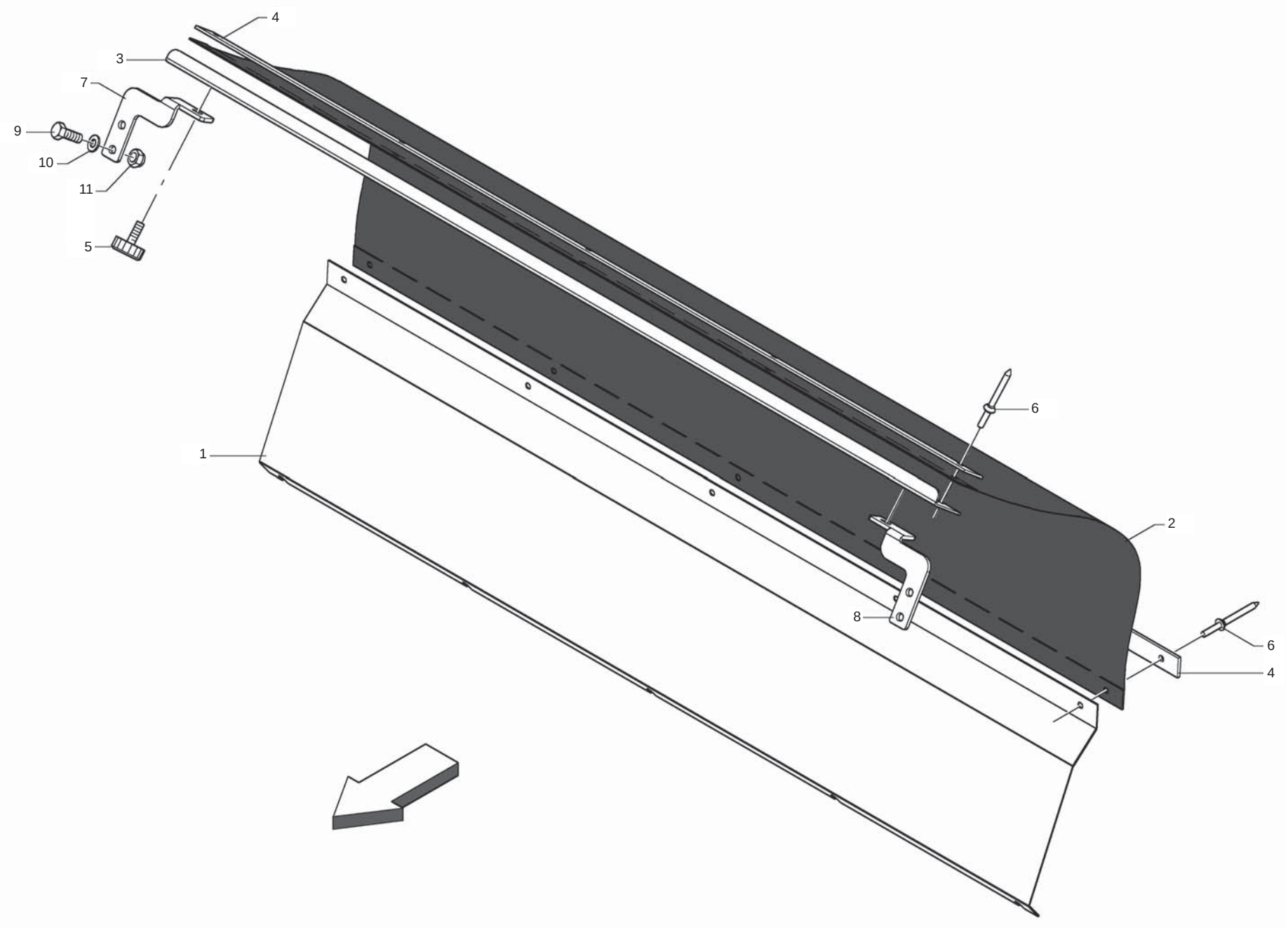

LEGATORE RETE (PARTE 3)
NET BINDER (PART 3)

TAV_360

Pos.	Cod.	Descrizione	Description	Description	Benennung	Descripcion
1	B0C2P0030R	PROT. INFERIORE	LOWER PROTECTION	PROTECTION INFERIEURE	SCHUETZ UNTEN	
2	B07V00062R	CHIUSURA IN GOMMA	RUBBER CLOSING	FERMETURE EN CAOUTCHOUC	GUMMIVERSCHLUSS	
3	B0C2P0029R	LAMIERA SOSTEGNO PROT.	LAMIERA SOSTEGNO PROT. .			
4	B0C002398R	PREMIGOMMA	RUBBERHOLDER	PRESSE-PNEU	GUMMIHALTERLEISTE	
5	B07V00106R	VOLANTINO M8X15 DIAM. 30	KNOB WHEEL	VOLAN M 8 DIAM. 30X19	HANDRAD	
6	B01000011R	RIVETTO STR. 6X12 U9200A AL	RIVET 6X12 U9200A AL	RIVET	ABREISSNIETEN 6X15	
7	B0C6P0061R	ATT.DX PROTEZ.SPRINTER TROTTER	RIGHT ATTACHMENT	ATTELAGE DROIT	ANSCHL. RECHTS SCHUTZ SPRINTE	
8	B0C6P0062R	ATT.SX PROTEZ.SPRINTER TROTTER	LEFT ATTACHMENT	ATTELAGE GAUCHE	ANSCHLUSS LINKS SCHUTZ SPR.	
9	F01020514R	VITE M12X1,75X40 U5739 8.8ZN	SCR. M12X1,75X40 U5739 8.8ZN	VIS M12X1,75X40 U5739 8.8ZN	SCHRA. M12X1,75X40 U5739 8.8ZN	
10	B01421230R	ROS.M12 13X 20X2,0 U1749 ZN	WASHER	RONDELLE	SCHEIBE	
11	F01230213R	DADO M12X1,75 U7474 CL8 ZN	NUT M12X1,75 U7474 6SZN	ECROU AUTOBL. M12	SELBSTSPERR.MUTTER M12	

TAV_370

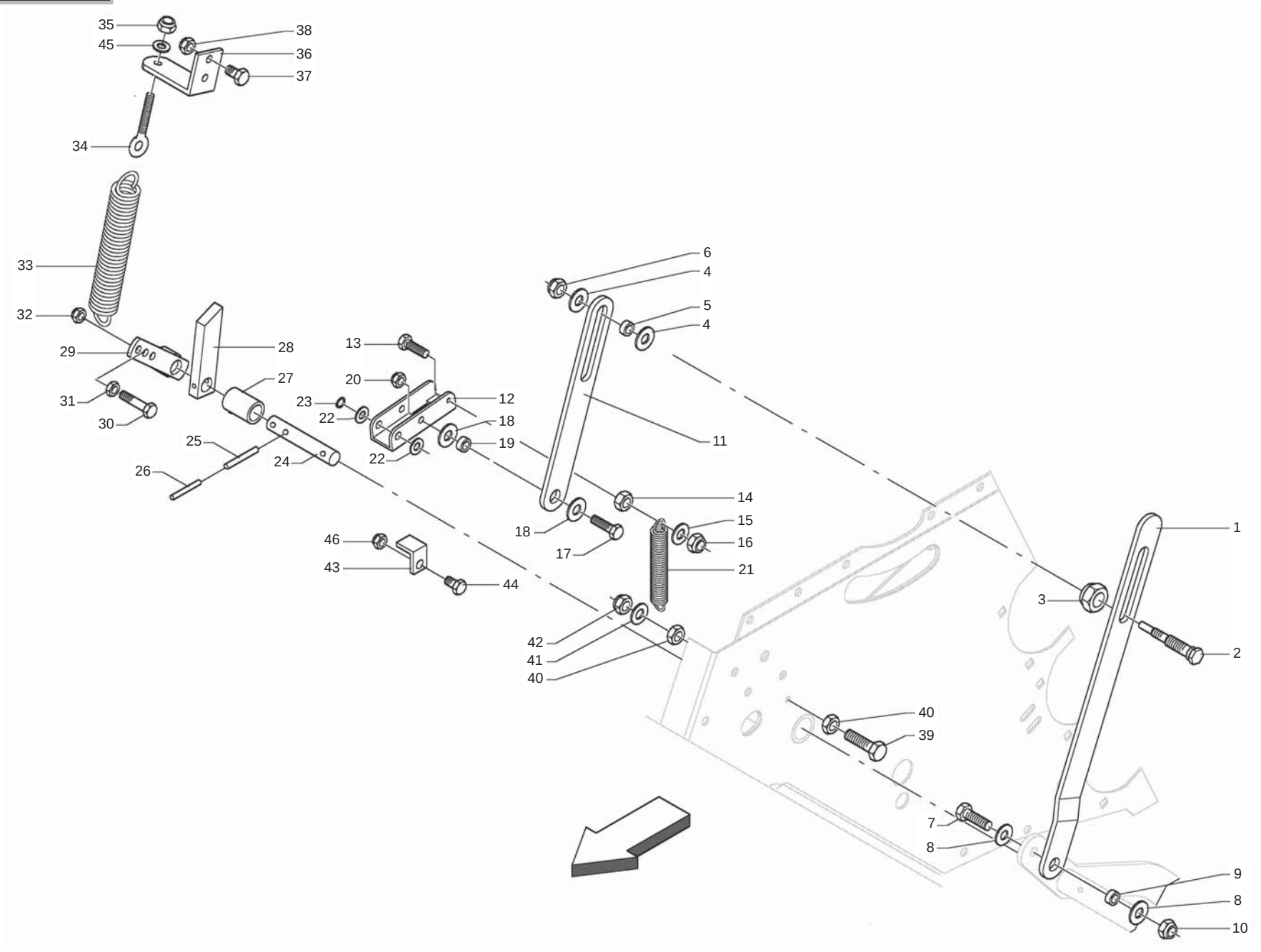

MASCHIO

cod. F07022343

LEGATORE RETE (PARTE 4)
NET BINDER (PART 4)

TAV_370

Pos.	Cod.	Descrizione	Description	Description	Benennung	Descripcion
1	B0C002043R	COLLEGAMENTO LAMA	BLADE CONNECTION	CONNEXION LAME	KLINGENKUPPLUNG	
2	B01300402R	PERNO CARICA LAMA	BLADE PIN	PIVOT CHARGE LAME	KLINGENSPANNVORRICHTUNGSBOLZEN	
3	B00920516R	DADO M16X 1,5 D985 6S ZN	NUT M16X1,5 D985 6S ZN	ECROU	SELBSTSICHERNDE MUTTER M16-5S	
4	F01420120R	ROS.M12 13X36X2,5 U6593 ZN	WASHER M12 13X36X2,5 U6593 ZN	RONDELLE M12 13X36X2,5 ZN		
5	B01300463R	BUSSOLA 12.5X20X10	BUSH	DOUILLE	KOMPASS	
6	F01230213R	DADO M12X1,75 U7474 CL8 ZN	NUT M12X1,75 U7474 6SZN	ECROU AUTOBL. M12	SELBSTSPERR.MUTTER M12	DADO AUTOBL. M12
7	F01020512R	VITE M12X1,75X35 U5739 8.8ZN	SCR. M12X1,75X35 U5739 8.8ZN	VIS M12X1,75X35 5739 8.8 ZN	SCHR. M12X1,75X35 5739 8.8 ZN	TORN. M12X1,75X35 5739 8.8 ZN
8	F01420120R	ROS.M12 13X36X2,5 U6593 ZN	WASHER M12 13X36X2,5 U6593 ZN	RONDELLE M12 13X36X2,5 ZN		
9	B01300463R	BUSSOLA 12.5X20X10	BUSH	DOUILLE	KOMPASS	
10	F01230213R	DADO M12X1,75 U7474 CL8 ZN	NUT M12X1,75 U7474 6SZN	ECROU AUTOBL. M12	SELBSTSPERR.MUTTER M12	DADO AUTOBL. M12
11	B0C002081R	LEVA SGANCIO LAMA	BLADE UNLOCK LEVER	LEVIER DECROCHET LAME	KLINGENAUSLOESERHEBEL	
12	B0C002075R	GANCIO LAMA FFPRO	BLADE HOOK FFPRO	CROCHET LAME	KLINGENHAKEN	
13	F01020445R	VITE M8X1,25X30 U5739 8.8ZN	SCR. M8X1,25X30 U5739 8.8ZN	VIS M 8X1,25X30 U5739 8.8 ZN	SCHRAU, M8X1,25X30 U5739 8.8ZN	TORN. M8X1,25X30 U5739 8.8 ZN
14	B00710208R	DADO M 8X1,25 U5588 6.8 ZN	NUT	ECROU	MUTTER M8-6S	
15	F01410051R	ROS.M8 8,4X 17X1,6 U6592 ZN	WASHER M8 8,4X17X1,6 U6592 ZN	RONDELLE M8 8,4X17X1,6 ZN	SCHEIBE M8 8,4X17X1,6 U6592 ZN	ARANDELA M8 8,4X17X1,6 U6592ZN
16	B00920208R	DADO M8X1 D985 8ZN	NUT M8X1 D985 8ZN	ECROU	SELBSTSICHERNDE MUTTER M8-5S	
17	F01020512R	VITE M12X1,75X35 U5739 8.8ZN	SCR. M12X1,75X35 U5739 8.8ZN	VIS M12X1,75X35 5739 8.8 ZN	SCHR. M12X1,75X35 5739 8.8 ZN	TORN. M12X1,75X35 5739 8.8 ZN
18	F01420120R	ROS.M12 13X36X2,5 U6593 ZN	WASHER M12 13X36X2,5 U6593 ZN	RONDELLE M12 13X36X2,5 ZN		
19	B01300463R	BUSSOLA 12.5X20X10	BUSH	DOUILLE	KOMPASS	
20	F01230213R	DADO M12X1,75 U7474 CL8 ZN	NUT M12X1,75 U7474 6SZN	ECROU AUTOBL. M12	SELBSTSPERR.MUTTER M12	DADO AUTOBL. M12
21	B01800025R	MOLLA 2 13 98T GRUPPO RETE	SPRING	RESSORT	FEDER	
22	F01410088R	ROS.M14 15X 28X2,5 U6592 ZN	WAS.M14 15X 28X2,5 U6592 ZB	RON.M14 15X 28X2,5 U6592 ZB	SCH.M14 15X 28X2,5 U6592 ZB	ARA.M14 15X 28X2,5 U6592 ZB
23	B01700015R	ANEL. D ARR. ALB. 15-E UNI3653	SEEGER RING	BAGUE SEEGER	SEEGERING	
24	B01300381R	SPINA TAGLIARETE LT COM.	PIN FOR NET CUTTING	EPINE POUR COUPE_FILET	ANTRIEBSSEITIGER NETZSCHNEIDE=	
25	F02100090R	SPINA E.P. 5X 40 U6873 C70 BR	ELASTIC PIN 5X40	GOUJON ELASTIQUE 5X40	SPANNHUELSE 5X40	ESPINA ELASTICA 5X40
26	F02100142R	SPINA E.P. 8X 40 U6873 C70 BR	ELASTIC PIN 8X40	GOUJON ELASTIQUE 8X40	SPANNHUELSE 8X40	ESPINA ELASTICA 8X40
27	B02526852R	BUSSOLA NYLON	NYLON BUSH	GALET	BUCHSE	
28	B0C002073R	SGANCIO LAMA FFPRO	BLADE UNLOCK	DECROCHET LAME	KLINGENAUSLOSER	
29	B07S00651R	ATTACCO MOLLA SGANCIO	SPRING ATTACHMENT	ATTELAGE RESSORT	ANSCHLUSS AUSLOSEFEDER	
30	B00191250R	VITE M12X1,75X 50 U5737 8.8ZN	SCREW	VIS	SCHRAUBE	
31	F01200293R	DADO M12X1,75 U5588 CL8 ZN	NUT M12X1,75 U5588 6S ZN	ECROU M12X1,75 U5588 6S ZN	MUTTER M12X1,75 U5588 6S ZN	TUERCA M12X1,75 U5588 6S ZN
32	F01230213R	DADO M12X1,75 U7474 CL8 ZN	NUT M12X1,75 U7474 6SZN	ECROU AUTOBL. M12	SELBSTSPERR.MUTTER M12	DADO AUTOBL. M12
33	B01822744R	MOLLA 49,5 SPIRE	SPRING 49,5 SPIRAL	RESSORT	FEDER	
34	B00545168R	OCCHIOLO PER TENDITORI M12-DX	EYELET M12	OEIL M12	OSE M12	
35	F01230213R	DADO M12X1,75 U7474 CL8 ZN	NUT M12X1,75 U7474 6SZN	ECROU AUTOBL. M12	SELBSTSPERR.MUTTER M12	DADO AUTOBL. M12
36	B0C002042R	PASTRA ATTACCO ATTUATORE	SPRING ATTACHMENT	PLAQUE ATTELAGE ACTIONNEUR	AKTUATORTRAGERPLATTE	
37	F01020508R	VITE M12X1,75X25 U5739 8.8ZN	SCR. M12X1,75X25 U5739 8.8ZN	VIS M12X1,75X25 U5739 8.8 ZN	SCHRAUBE M12X1,75X25U57398.8ZN	TORNIL.M12X1,75X25 U5739 8.8ZN
38	F01230213R	DADO M12X1,75 U7474 CL8 ZN	NUT M12X1,75 U7474 6SZN	ECROU AUTOBL. M12	SELBSTSPERR.MUTTER M12	DADO AUTOBL. M12
39	F01020445R	VITE M8X1,25X30 U5739 8.8ZN	SCR. M8X1,25X30 U5739 8.8ZN	VIS M 8X1,25X30 U5739 8.8 ZN	SCHRAU, M8X1,25X30 U5739 8.8ZN	TORN. M8X1,25X30 U5739 8.8 ZN
40	B00710208R	DADO M 8X1,25 U5588 6.8 ZN	NUT	ECROU	MUTTER M8-6S	
41	F01410051R	ROS.M8 8,4X 17X1,6 U6592 ZN	WASHER M8 8,4X17X1,6 U6592 ZN	RONDELLE M8 8,4X17X1,6 ZN	SCHEIBE M8 8,4X17X1,6 U6592 ZN	ARANDELA M8 8,4X17X1,6 U6592ZN
42	B00920208R	DADO M8X1 D985 8ZN	NUT M8X1 D985 8ZN	ECROU	SELBSTSICHERNDE MUTTER M8-5S	
43	B0C000053R	FERMO COLT.	KNIVES STOP	ARRET COUTEAUX	MESSERANSCHLAG	
44	F01020476R	VITE M10X1,5X30 U5739 8.8ZN	SCR. M10X1,5X30 U5739 8.8ZN	VIS M10X1,5X30 U5739 8.8 ZN	SCHRAUBE M10X1,5X30U5739 8.8ZN	TORNIL.M10X1,5X30 U5739 8.8 ZN
45	F01410062R	ROS.M10 10,5X 18X 2 U6592 ZN	WASHER M10 10,5X 18X 2 U6592	RONDELLE M10 10,5X18X2 ZN	DICHTUNGSRING M10 10,5X18X2 ZN	RONDANA M10 10,5X18X2 ZN
46	F01230202R	DADO M10X 1,5 D985 8 ZN	NUT M10 D985	ECROU AUTOBL. M10	SELBSTSPERR.MUTTER M10	DADO AUTOBL. M10

TAV_380

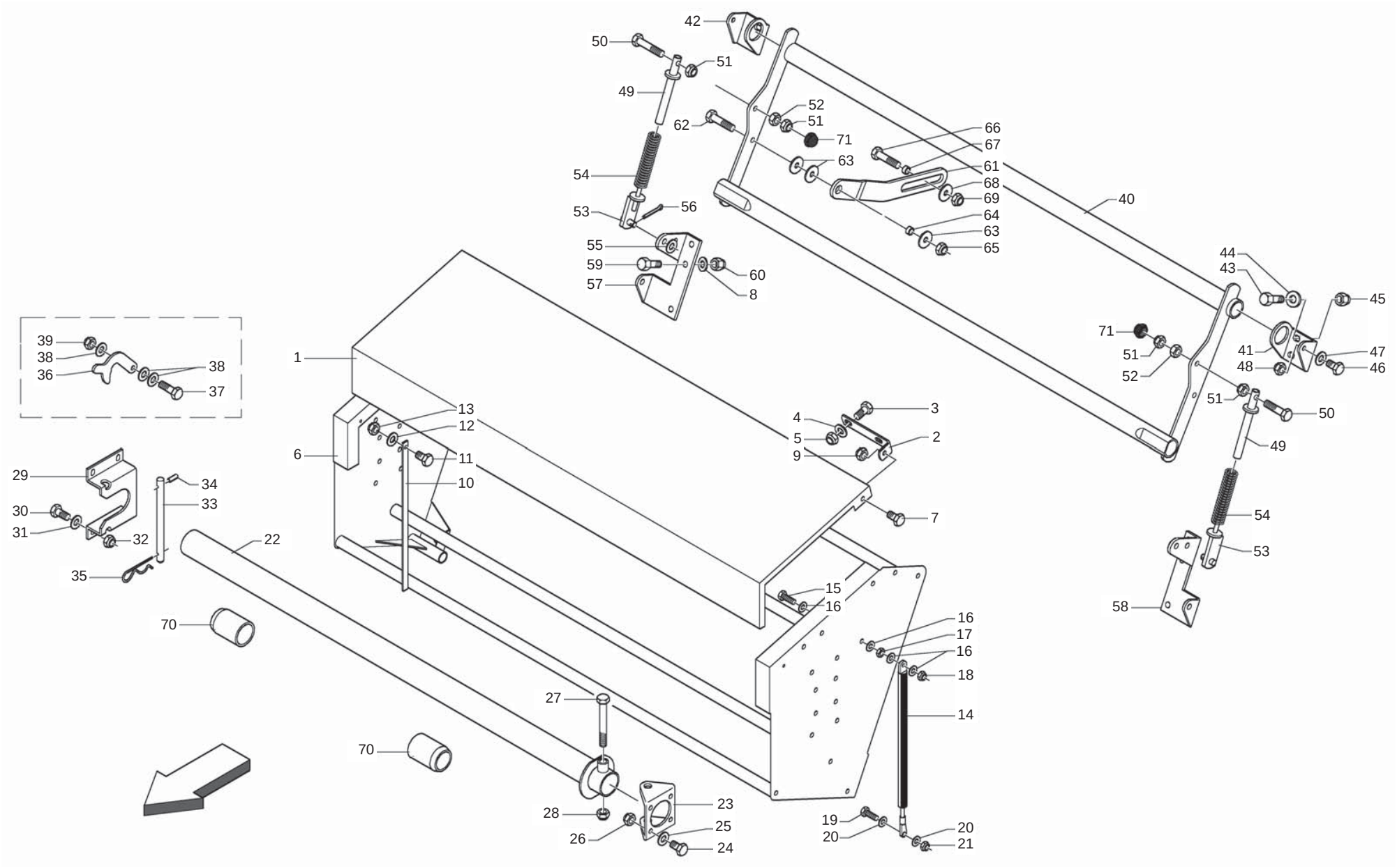

MASCHIO

cod. F07022343

LEGATORE RETE (PARTE 5)
NET BINDER (PART 5)

TAV_380

Pos.	Cod.	Descrizione	Description	Description	Benennung	Descripcion
1	B07S00654R	COPERCHIO ROTOLO	COVER	COUVERCLE ROULEAU	ROLLENDECKEL	
2	B0C000547R	CERNIERA COPERCHIO	COVER HINGE	CHARNIERE COUVERCLE	DECKELSCHANIER	
3	F01020470R	VITE M10X1,5X20 U5739 8.8ZN	SCR. M10X1,5X20 U5739 8.8ZN	VIS M10X1,5X20 U5739 8.8 ZN	SCHRAUBE M10X1,5X20 U5739 ZN	TORNILLOM10X1,5X20 U5739 8.8ZN
4	F01410062R	ROS.M10 10,5X 18X 2 U6592 ZN	WASHER M10 10,5X 18X 2 U6592	RONDELLE M10 10,5X18X2 ZN	DICHTUNGSRING M10 10,5X18X2 ZN	RONDANA M10 10,5X18X2 ZN
5	F01230202R	DADO M10X 1,5 D985 8 ZN	NUT M10 D985	ECROU AUTOBL. M10	SELBSTSPERR.MUTTER M10	DADO AUTOBL. M10
6	B07S00631R	CASSA PORTAROTOLO	CASE	CAISSE PORTE-ROULEAU	ROLLENAUFNAHMEKASTEN	
7	F01020472R	VITE M10X1,5X25 U5739 8.8ZN	SCR. M10X1,5X25 U5739 8.8ZN	VIS M10X1,5X25 U5739 8.8 ZN	SCHRAUBE M10X1,5X25 U5739 8.8	TORNILLO 10X25 U5739 8.8 ZN
8	F01410062R	ROS.M10 10,5X 18X 2 U6592 ZN	WASHER M10 10,5X 18X 2 U6592	RONDELLE M10 10,5X18X2 ZN	DICHTUNGSRING M10 10,5X18X2 ZN	RONDANA M10 10,5X18X2 ZN
9	F01230202R	DADO M10X 1,5 D985 8 ZN	NUT M10 D985	ECROU AUTOBL. M10	SELBSTSPERR.MUTTER M10	DADO AUTOBL. M10
10	B0C002006R	SOSTEGNO COPERCHIO	COVER SUPPORT	SUPPORT COUVERCLE	DECKELHALTERUNG	
11	B00180620R	VITE M6X1X20 U5739 8.8ZN	SCREW	VIS	SCHRAUBE	
12	F01410037R	ROS.M6 6,4X12,5X1,6 U6592 ZN	WASHER M6 6,4X12,5X1,6 U6592ZN	RONDEL.M6 6,4X12,5X1,6 U6592ZN	SCHEIB.M6 6,4X12,5X1,6 U6592ZN	ARAND.M6 6,4X12,5X1,6 U6592 ZN
13	B00920106R	DADO M6X1 D985 8ZN	NUT	ECROU	SELBSTSICHERNDE MUTTER M6-5S	
14	B0H100001R	MOLLA A GAS PER RETE L500-750N	GAS SPRING FOR NET L=500-750N	RESSORT GAS POUR FILET L=500-6	GAS GETRIEBENE FEDER L=500-750	
15	F01020450R	VITE M8X1,25X40 U5739 8.8ZN	SCR. M8X1,25X40 U5739 8.8ZN	VIS M8X1,25X40 U5739 8.8ZN	SCHRA. M8X1,25X40 U5739 8.8ZN	TORN. M8X1,25X40 U5739 8.8ZN
16	F01410051R	ROS.M8 8,4X 17X1,6 U6592 ZN	WASHER M8 8,4X17X1,6 U6592 ZN	RONDELLE M8 8,4X17X1,6 ZN	SCHEIBE M8 8,4X17X1,6 U6592 ZN	ARANDELA M8 8,4X17X1,6 U6592ZN
17	B00710208R	DADO M 8X1,25 U5588 6.8 ZN	NUT	ECROU	MUTTER M8-6S	
18	B00920208R	DADO M8X1 D985 8ZN	NUT M8X1 D985 8ZN	ECROU	SELBSTSICHERNDE MUTTER M8-5S	
19	F01020445R	VITE M8X1,25X30 U5739 8.8ZN	SCR. M8X1,25X30 U5739 8.8ZN	VIS M 8X1,25X30 U5739 8.8 ZN	SCHRAU, M8X1,25X30 U5739 8.8ZN	TORN. M8X1,25X30 U5739 8.8 ZN
20	F01410051R	ROS.M8 8,4X 17X1,6 U6592 ZN	WASHER M8 8,4X17X1,6 U6592 ZN	RONDELLE M8 8,4X17X1,6 ZN	SCHEIBE M8 8,4X17X1,6 U6592 ZN	ARANDELA M8 8,4X17X1,6 U6592ZN
21	B00920208R	DADO M8X1 D985 8ZN	NUT M8X1 D985 8ZN	ECROU	SELBSTSICHERNDE MUTTER M8-5S	
22	B07SP0240R	TUBO PORTA ROTOLO	ROLL CARRYING TUBE	TUYAU PORTE-ROULEAU	ROHR ROLLEHALTER	
23	B0C002001R	FULCRO	FULCRUM	POINT D APPUI	DREHPUNKT	
24	F01020472R	VITE M10X1,5X25 U5739 8.8ZN	SCR. M10X1,5X25 U5739 8.8ZN	VIS M10X1,5X25 U5739 8.8 ZN	SCHRAUBE M10X1,5X25 U5739 8.8	TORNILLO 10X25 U5739 8.8 ZN
25	F01410062R	ROS.M10 10,5X 18X 2 U6592 ZN	WASHER M10 10,5X 18X 2 U6592	RONDELLE M10 10,5X18X2 ZN	DICHTUNGSRING M10 10,5X18X2 ZN	RONDANA M10 10,5X18X2 ZN
26	F01230202R	DADO M10X 1,5 D985 8 ZN	NUT M10 D985	ECROU AUTOBL. M10	SELBSTSPERR.MUTTER M10	DADO AUTOBL. M10
27	F01020268R	VITE M16X2X130 U5737 8.8ZN	SCR. M16X2X130 U5737 8.8ZN	VIS M16X2X130 U5737 8.8 ZN	SCHRA. M16X2X130 U5737 8.8 ZN	TORN. M16X2X130 U5737 8.8 ZN
28	B00920516R	DADO M16X 1,5 D985 6S ZN	NUT M16X1,5 D985 6S ZN	ECROU	SELBSTSICHERNDE MUTTER M16-5S	
29	B0C002002R	ALLOGIAMENTO TUBO	TUBE HOUSING	LOGEMENT TUYAU	ROHRSITZ	
30	F01020472R	VITE M10X1,5X25 U5739 8.8ZN	SCR. M10X1,5X25 U5739 8.8ZN	VIS M10X1,5X25 U5739 8.8 ZN	SCHRAUBE M10X1,5X25 U5739 8.8	TORNILLO 10X25 U5739 8.8 ZN
31	F01410062R	ROS.M10 10,5X 18X 2 U6592 ZN	WASHER M10 10,5X 18X 2 U6592	RONDELLE M10 10,5X18X2 ZN	DICHTUNGSRING M10 10,5X18X2 ZN	RONDANA M10 10,5X18X2 ZN
32	F01230202R	DADO M10X 1,5 D985 8 ZN	NUT M10 D985	ECROU AUTOBL. M10	SELBSTSPERR.MUTTER M10	DADO AUTOBL. M10
33	B01300373R	SPINA FERMO TUBO PORTA ROTOLO	PIPE PIN	EPINE ARRET	ARRETIERBOLZEN FUER NETZROLLEN	
34	B01110435R	SPINA EL.4 X35 DIN 1481 INOX	PIN	GOUPILLE	STIFT	
35	F02200363R	COPIGLIA R 3X 62 ZN	SPRING SPLIT PIN 3X 62 ZN	GOUPILLE R 3X62	SPLINT R 3X62	CHAVETA R 3X62
36	B0C002054R	GANCIO	HOOK	CROCHET	HAKEN	
37	F01020472R	VITE M10X1,5X25 U5739 8.8ZN	SCR. M10X1,5X25 U5739 8.8ZN	VIS M10X1,5X25 U5739 8.8 ZN	SCHRAUBE M10X1,5X25 U5739 8.8	TORNILLO 10X25 U5739 8.8 ZN
38	F01410062R	ROS.M10 10,5X 18X 2 U6592 ZN	WASHER M10 10,5X 18X 2 U6592	RONDELLE M10 10,5X18X2 ZN	DICHTUNGSRING M10 10,5X18X2 ZN	RONDANA M10 10,5X18X2 ZN
39	F01230202R	DADO M10X 1,5 D985 8 ZN	NUT M10 D985	ECROU AUTOBL. M10	SELBSTSPERR.MUTTER M10	DADO AUTOBL. M10
40	B07S01392R	BRACCIO FRENA RETE	NET BRAKING ARM	BRAS DE FREINAGE FILET	NETZBREMSENARM	
41	B0C002046R	FULCRO SX	LEFT FULCRUM	POINT D APPUI GAUCHE	LINKER STUETZPUNKT	
42	B0C002045R	FULCRO DX	RIGHT FULCRUM	POINT D APPUI DROIT	RECHTER STUETZPUNKT	
43	F01020510R	VITE M12X1,75X30 U5739 8.8ZN	SCR. M12X1,75X30 U5739 8.8ZN	VIS M12X1,75X30 U5739 8.8ZN	SCHRAU.M12X1,75X30 U5739 8.8ZN	TORN. M12X1,75X30 U5739 8.8ZN
44	B01421230R	ROS.M12 13X 20X2,0 U1749 ZN	WASHER	RONDELLE	SCHEIBE	
45	F01230213R	DADO M12X1,75 U7474 CL8 ZN	NUT M12X1,75 U7474 6SZN	ECROU AUTOBL. M12	SELBSTSPERR.MUTTER M12	DADO AUTOBL. M12
46	F01020476R	VITE M10X1,5X30 U5739 8.8ZN	SCR. M10X1,5X30 U5739 8.8ZN	VIS M10X1,5X30 U5739 8.8 ZN	SCHRAUBE M10X1,5X30U5739 8.8ZN	TORNIL.M10X1,5X30 U5739 8.8 ZN
47	B01421230R	ROS.M12 13X 20X2,0 U1749 ZN	WASHER	RONDELLE	SCHEIBE	
48	F01230213R	DADO M12X1,75 U7474 CL8 ZN	NUT M12X1,75 U7474 6SZN	ECROU AUTOBL. M12	SELBSTSPERR.MUTTER M12	DADO AUTOBL. M12
49	B07S00634R	GUIDA FRENO ROTOLO	BRAKE GUIDE	GUIDE FREIN-ROULEAU	ROLLENBREMSENFUHRUNG	
50	F01020522R	VITE M12X1,75X80 U5739 8.8ZN	SCR. M12X1,75X80 U5739 8.8ZN	VIS M12X1,75X80 U5739 8.8ZN	SCHRA.M12X1,75X80 U5739 8.8ZN	TORN.M12X1,75X80 U5739 8.8ZN
51	F01230213R	DADO M12X1,75 U7474 CL8 ZN	NUT M12X1,75 U7474 6SZN	ECROU AUTOBL. M12	SELBSTSPERR.MUTTER M12	DADO AUTOBL. M12
52	F01200293R	DADO M12X1,75 U5588 CL8 ZN	NUT M12X1,75 U5588 6S ZN	ECROU M12X1,75 U5588 6S ZN	MUTTER M12X1,75 U5588 6S ZN	TUERCA M12X1,75 U5588 6S ZN
53	B07S00633R	FRENO ROTOLO	TIE ROD	FREIN-ROULEAU	ROLLENBREMSE	
54	B01800046R	MOLLA 6 30 180C	SPRING	RESSORT	FEDER	
55	B01421230R	ROS.M12 13X 20X2,0 U1749 ZN	WASHER	RONDELLE	SCHEIBE	
56	F02200164R	COPIGLIA 3X 30 U1336 ZN	SPLIT PIN 3X 30 U1336 ZN			
57	B0C000049R	ATTACCO DX	RIGHT COUPLING	ATTELAGE DROIT	AMSCHLUSS RECHTS	

TAV_380

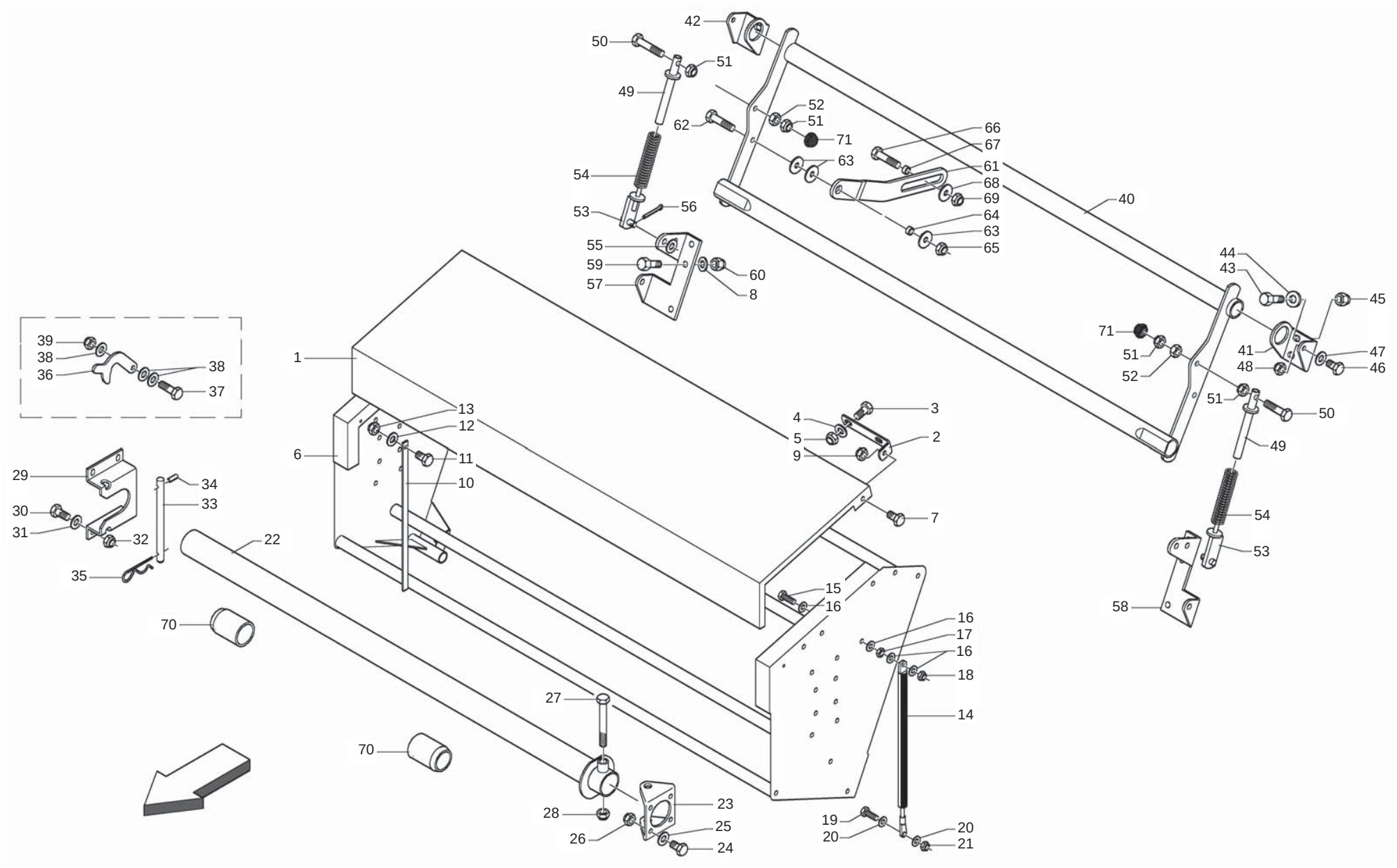

MASCHIO

cod. F07022343

LEGATORE RETE (PARTE 5)
NET BINDER (PART 5)

TAV_380

Pos.	Cod.	Descrizione	Description	Description	Benennung	Descripcion
58	B0C000048R	ATTACCO SX	LEFT COUPLING	ATTELAGE GAUCHE	AMSCHLUSS LINKS	
59	F01020476R	VITE M10X1,5X30 U5739 8.8ZN	SCR. M10X1,5X30 U5739 8.8ZN	VIS M10X1,5X30 U5739 8.8 ZN	SCHRAUBE M10X1,5X30U5739 8.8ZN	TORNIL.M10X1,5X30 U5739 8.8 ZN
60	F01230202R	DADO M10X 1,5 D985 8 ZN	NUT M10 D985	ECROU AUTOBL. M10	SELBSTSPERR.MUTTER M10	DADO AUTOBL. M10
61	B0C002067R	COLLEGAMENTO FRENO	BRACES	CONNEXION FREIN	BREMSENANSCHLUSS	
62	F01020152R	VITE M12X1,75X40 U5737 8.8ZN	SCR. M12X1,75X40 U5737 8.8ZN	VIS M12X1,75X40 U5737 8.8 ZN	SCHRAUBE M12X1,75X40U57378.8ZN	TORNIL.M12X1,75X40 U5737 8.8ZN
63	F01420120R	ROS.M12 13X36X2,5 U6593 ZN	WASHER M12 13X36X2,5 U6593 ZN	RONDELLE M12 13X36X2,5 ZN		
64	B01300463R	BUSSOLA 12.5X20X10	BUSH	DOUILLE	KOMPASS	
65	F01230213R	DADO M12X1,75 U7474 CL8 ZN	NUT M12X1,75 U7474 6SZN	ECROU AUTOBL. M12	SELBSTSPERR.MUTTER M12	DADO AUTOBL. M12
66	F01020512R	VITE M12X1,75X35 U5739 8.8ZN	SCR. M12X1,75X35 U5739 8.8ZN	VIS M12X1,75X35 5739 8.8 ZN	SCHR. M12X1,75X35 5739 8.8 ZN	TORN. M12X1,75X35 5739 8.8 ZN
67	B01300463R	BUSSOLA 12.5X20X10	BUSH	DOUILLE	KOMPASS	
68	F01420120R	ROS.M12 13X36X2,5 U6593 ZN	WASHER M12 13X36X2,5 U6593 ZN	RONDELLE M12 13X36X2,5 ZN		
69	F01230213R	DADO M12X1,75 U7474 CL8 ZN	NUT M12X1,75 U7474 6SZN	ECROU AUTOBL. M12	SELBSTSPERR.MUTTER M12	DADO AUTOBL. M12
70	B025P0011R	TAMPONE ROTOLO RETE	BUSH FOR NET ROLL	BAGUES	SCHLEGEL	
71	B07VC0016R	CAP. PROT. DADO M12	GUARD CAP	CHAPEAU DE PROTECTION	SCHUTZDECKEL	

TAV_390

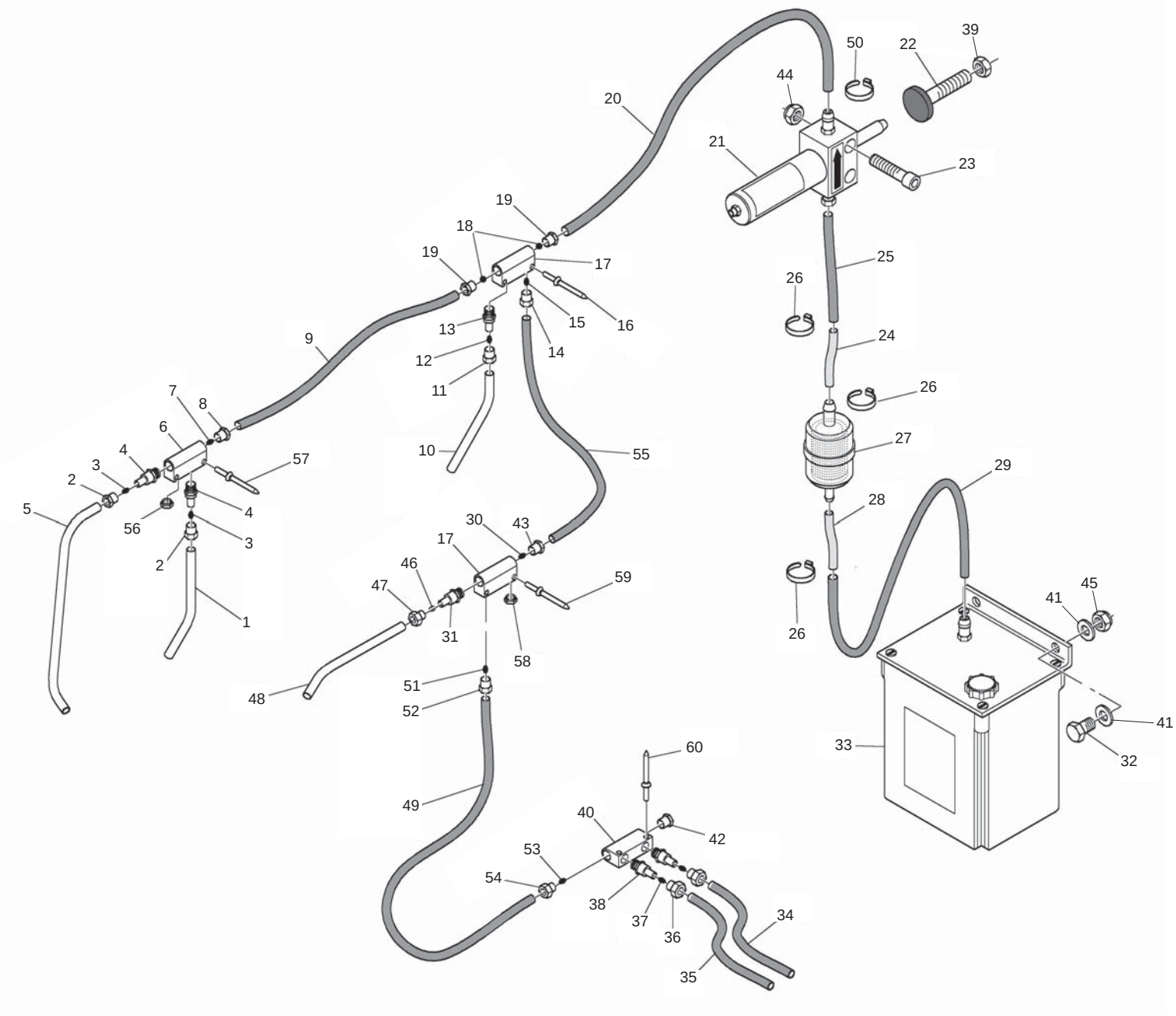

MASCHIO

cod. F07022343

IMPIANTO OLIATURA AUTOMATICA
AUTOMATIC OILING SYSTEM

TAV_390

Pos.	Cod.	Descrizione	Description	Description	Benennung	Descripcion
1	B0H000129R	TUBETTO IN RAME 4 L=90	COPPER PIPE 4 L=9	PETIT TUYAU EN CUIVRE DIAM. 4	KUPFER ROEHRCHEN 4 L=9	
2	B0H600014R	RACCORDO INIETTORE PER TUBO 4	INJECTOR UNION FOR PIPE	RACCORD INJECTEUR POUR TUYAU D	EINSPRITZDUESENANSCHLUSS	
3	B0H600013R	DOPPI CONI PER TUBO 4	DOUBLE CONE FOR PIPE	DOUBLE CONES POUR TUYAU 4	DOPPELTER KEGEL FUER SCHLAUCH	
4	B0HE00003R	INIETTORE TIPO E	TYPE E INJECTOR	GICLEUR TYPE E	SPRITZDUESE	
5	B0H000130R	TUBETTO IN RAME 4 L=150	COPPER PIPE 4 L=1	PETIT TUYAU EN CUIVRE DIAM 4 L	KUPFER ROEHRCHEN 4 L=1	
6	B0H000102R	DISTRIBUTORE UNILAT. 4 VIE	UNILATERAL DISTRIBUTOR	DISTRIBUTEUR UNILATERAL 4 VOIE	EINSEITIGER VERTEILER	
7	B0H600013R	DOPPI CONI PER TUBO 4	DOUBLE CONE FOR PIPE	DOUBLE CONES POUR TUYAU 4	DOPPELTER KEGEL FUER SCHLAUCH	
8	B0H600013R	DOPPI CONI PER TUBO 4	DOUBLE CONE FOR PIPE	DOUBLE CONES POUR TUYAU 4	DOPPELTER KEGEL FUER SCHLAUCH	
9	B0H000132R	TUBETTO IN NYLON 4 L=750	NYLON PIPE 4 L=750	PETIT TUYAU EN NYLON DIAM 4 L=	KLEINE ROEHRE AUS NYLON J4 L=7	
10	B0H000129R	TUBETTO IN RAME 4 L=90	COPPER PIPE 4 L=9	PETIT TUYAU EN CUIVRE DIAM. 4	KUPFER ROEHRCHEN 4 L=9	
11	B0H600014R	RACCORDO INIETTORE PER TUBO 4	INJECTOR UNION FOR PIPE	RACCORD INJECTEUR POUR TUYAU D	EINSPRITZDUESENANSCHLUSS	
12	B0H600013R	DOPPI CONI PER TUBO 4	DOUBLE CONE FOR PIPE	DOUBLE CONES POUR TUYAU 4	DOPPELTER KEGEL FUER SCHLAUCH	
13	B0HE00003R	INIETTORE TIPO E	TYPE E INJECTOR	GICLEUR TYPE E	SPRITZDUESE	
14	B0H600016R	RACC. X TUBO 4RIF.ILC 04.102.	UNION FOR PIPE 4RI	RACCORD POUR TUYAU DIAM 4	VERBINDUNGSTUECK FUR SCHLAUCH	
15	B0H600013R	DOPPI CONI PER TUBO 4	DOUBLE CONE FOR PIPE	DOUBLE CONES POUR TUYAU 4	DOPPELTER KEGEL FUER SCHLAUCH	
16	B01000012R	RIVETTO STR. 6,4X22 ACCIAIO	RIVET	RIVET	ABREISSNIETEN 6X26	
17	B0H000102R	DISTRIBUTORE UNILAT. 4 VIE	UNILATERAL DISTRIBUTOR	DISTRIBUTEUR UNILATERAL 4 VOIE	EINSEITIGER VERTEILER	
18	B0H600013R	DOPPI CONI PER TUBO 4	DOUBLE CONE FOR PIPE	DOUBLE CONES POUR TUYAU 4	DOPPELTER KEGEL FUER SCHLAUCH	
19	B0H600016R	RACC. X TUBO 4RIF.ILC 04.102.	UNION FOR PIPE 4RI	RACCORD POUR TUYAU DIAM 4	VERBINDUNGSTUECK FUR SCHLAUCH	
20	B0H000135R	TUBETTO IN NYLON 4 L=1500	NYLON PIPE 4 L=1500	PETIT TUYAU EN NYLON DIAM 4 L=	KLEINE ROEHRE IN NYLON J4 L=15	
21	B0H400007R	POMPA PIST PORT.6CCX10MM CORSA	PISTON PUMPT	POMPE PISTON	KOLBENPUMPE	
22	B00533162R	SPINTORE KIT OLIATURA	OILING KIT FORCER	POUSSEUR KIT HUILAGE	BLOCKDRUECKER KIT OELER	
23	B00400850R	VITE M8X1,25X50 U5931 8.8BR	SCREW	VIS	SCHRAUBE M8X50.8.8	
24	B0H000023R	TUBETTO COLLEGAMENTO FILTRO	CONNECTION PIPE	PETIT TUBE JONCTION FILTRE	VERBINDUNGSSCHLAUCH	
25	B0H000136R	TUBETTO IN NYLON 6 L=180	NYLON PIPE 6 L=300	PETIT TUYAU EN NYLON DIAM 6 L=	KLEINE ROEHRE AUS NYLON J4 L=2	
26	B0E600026R	FASCETTA 10,4X 10,7 CE09 NORMA	CLAMP 8,8X9,3 HLS A HILLS	BANDE 8,8X9,3	MANSCHETTE 8,8X9,3 HLS A HILLS	
27	B0H000022R	FILTRO BENZINA MAXIFISPINO	FILTER MAXIFIS	FILTRE ESSENCE	BENZINFILTER MAXIFIS	
28	B0H000023R	TUBETTO COLLEGAMENTO FILTRO	CONNECTION PIPE	PETIT TUBE JONCTION FILTRE	VERBINDUNGSSCHLAUCH	
29	B0H000136R	TUBETTO IN NYLON 6 L=180	NYLON PIPE 6 L=300	PETIT TUYAU EN NYLON DIAM 6 L=	KLEINE ROEHRE AUS NYLON J4 L=2	
30	B0H600013R	DOPPI CONI PER TUBO 4	DOUBLE CONE FOR PIPE	DOUBLE CONES POUR TUYAU 4	DOPPELTER KEGEL FUER SCHLAUCH	
31	B0HE00003R	INIETTORE TIPO E	TYPE E INJECTOR	GICLEUR TYPE E	SPRITZDUESE	
32	B00180620R	VITE M6X1X20 U5739 8.8ZN	SCREW	VIS	SCHRAUBE	
33	B04800000R	SERB.NYLON PER POMPA PISTONERI	NYLON TANK PUMP PISTONERI	RESERVOIR	OELBEHAELTER	
34	B0H000129R	TUBETTO IN RAME 4 L=90	COPPER PIPE 4 L=9	PETIT TUYAU EN CUIVRE DIAM. 4	KUPFER ROEHRCHEN 4 L=9	
35	B0H000131R	TUBETTO IN RAME 4 L=190	COPPER PIPE 4 L=1	PETIT TUYAU EN CUIVRE DIAM 4 L	KUPFER ROEHRCHEN 4 L=1	
36	B0H600014R	RACCORDO INIETTORE PER TUBO 4	INJECTOR UNION FOR PIPE	RACCORD INJECTEUR POUR TUYAU D	EINSPRITZDUESENANSCHLUSS	
37	B0H600013R	DOPPI CONI PER TUBO 4	DOUBLE CONE FOR PIPE	DOUBLE CONES POUR TUYAU 4	DOPPELTER KEGEL FUER SCHLAUCH	
38	B0HE00003R	INIETTORE TIPO E	TYPE E INJECTOR	GICLEUR TYPE E	SPRITZDUESE	
39	F01200293R	DADO M12X1,75 U5588 CL8 ZN	NUT M12X1,75 U5588 6S ZN	ECROU M12X1,75 U5588 6S ZN	MUTTER M12X1,75 U5588 6S ZN	TUERCA M12X1,75 U5588 6S ZN
40	B0H000102R	DISTRIBUTORE UNILAT. 4 VIE	UNILATERAL DISTRIBUTOR	DISTRIBUTEUR UNILATERAL 4 VOIE	EINSEITIGER VERTEILER	
41	F01410037R	ROS.M6 6,4X12,5X1,6 U6592 ZN	WASHER M6 6,4X12,5X1,6 U6592ZN	RONDEL.M6 6,4X12,5X1,6 U6592ZN	SCHEIB.M6 6,4X12,5X1,6 U6592ZN	ARAND.M6 6,4X12,5X1,6 U6592 ZN
42	B0H600015R	TAPPORIF.ILC 05.001.0	PLUG	BOUCHON	STOEPSEL	
43	B0H600016R	RACC. X TUBO 4RIF.ILC 04.102.	UNION FOR PIPE 4RI	RACCORD POUR TUYAU DIAM 4	VERBINDUNGSTUECK FUR SCHLAUCH	
44	B00920208R	DADO M8X1 D985 8ZN	NUT M8X1 D985 8ZN	ECROU	SELBSTSICHERNDE MUTTER M8-5S	
45	B00920106R	DADO M6X1 D985 8ZN	NUT	ECROU	SELBSTSICHERNDE MUTTER M6-5S	
46	B0H600013R	DOPPI CONI PER TUBO 4	DOUBLE CONE FOR PIPE	DOUBLE CONES POUR TUYAU 4	DOPPELTER KEGEL FUER SCHLAUCH	
47	B0H600014R	RACCORDO INIETTORE PER TUBO 4	INJECTOR UNION FOR PIPE	RACCORD INJECTEUR POUR TUYAU D	EINSPRITZDUESENANSCHLUSS	
48	B0H000128R	TUBETTO IN RAME 4 L=120	COPPER PIPE 4 L=1	PETIT TUYAU EN CUIVRE DIAM. 4	KUPFER ROEHRCHEN 04 L=1	
49	B0H000133R	TUBETTO IN NYLON 4 L=420	NYLON PIPE 4 L=420	PETIT TUYAU EN NYLON DIAM 4 L=	NYLONROEHRCHEN 4 L=420	
50	F05150055R	FASCETTA POLYA. 3,6X200 NERA	WHITE BAND	BANDE BIANCHE	WEIBE BAND	CINTA BLANCA
51	B0H600013R	DOPPI CONI PER TUBO 4	DOUBLE CONE FOR PIPE	DOUBLE CONES POUR TUYAU 4	DOPPELTER KEGEL FUER SCHLAUCH	
52	B0H600016R	RACC. X TUBO 4RIF.ILC 04.102.	UNION FOR PIPE 4RI	RACCORD POUR TUYAU DIAM 4	VERBINDUNGSTUECK FUR SCHLAUCH	
53	B0H600013R	DOPPI CONI PER TUBO 4	DOUBLE CONE FOR PIPE	DOUBLE CONES POUR TUYAU 4	DOPPELTER KEGEL FUER SCHLAUCH	
54	B0H600016R	RACC. X TUBO 4RIF.ILC 04.102.	UNION FOR PIPE 4RI	RACCORD POUR TUYAU DIAM 4	VERBINDUNGSTUECK FUR SCHLAUCH	
55	B0H000134R	TUBETTO IN NYLON 4 L=650	NYLON PIPE 4 L=550	PETIT TUYAU EN NYLON DIAM 4 L=	NYLONROEHRCHEN 4 L=550	
56	B0H600015R	TAPPORIF.ILC 05.001.0	PLUG	BOUCHON	STOEPSEL	
57	B01000012R	RIVETTO STR. 6,4X22 ACCIAIO	RIVET	RIVET	ABREISSNIETEN 6X26	

TAV_390

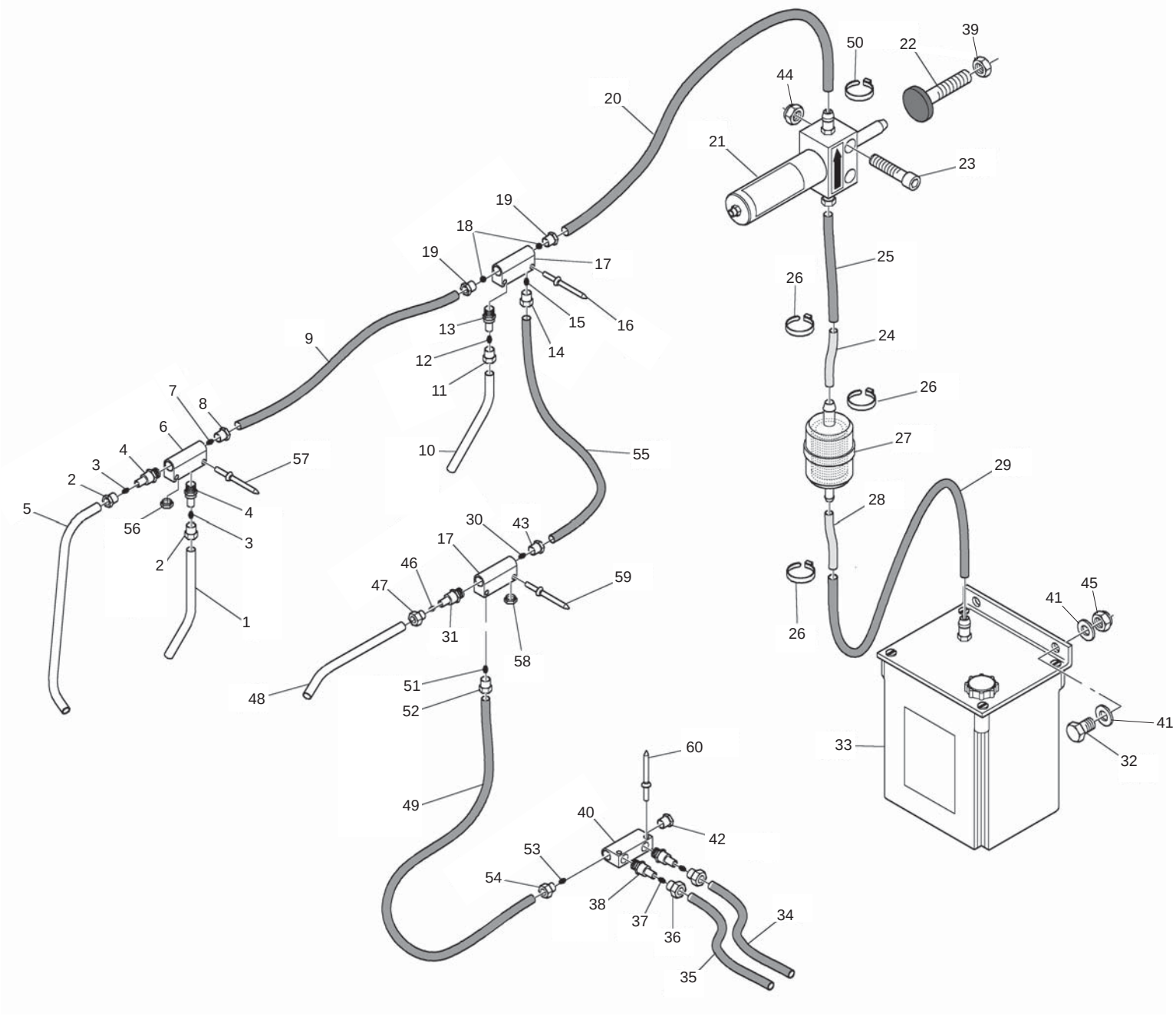

MASCHIO

cod. F07022343

IMPIANTO OLIATURA AUTOMATICA
AUTOMATIC OILING SYSTEM

Pos.	Cod.	Descrizione	Description	Description	Benennung	Descripcion
58	B0H600015R	TAPPORIF.ILC 05.001.0	PLUG	BOUCHON	STOEPSEL	
59	B01000012R	RIVETTO STR. 6,4X22 ACCIAIO	RIVET	RIVET	ABREISSNIETEN 6X26	
60	B01000012R	RIVETTO STR. 6,4X22 ACCIAIO	RIVET	RIVET	ABREISSNIETEN 6X26	

TAV_400

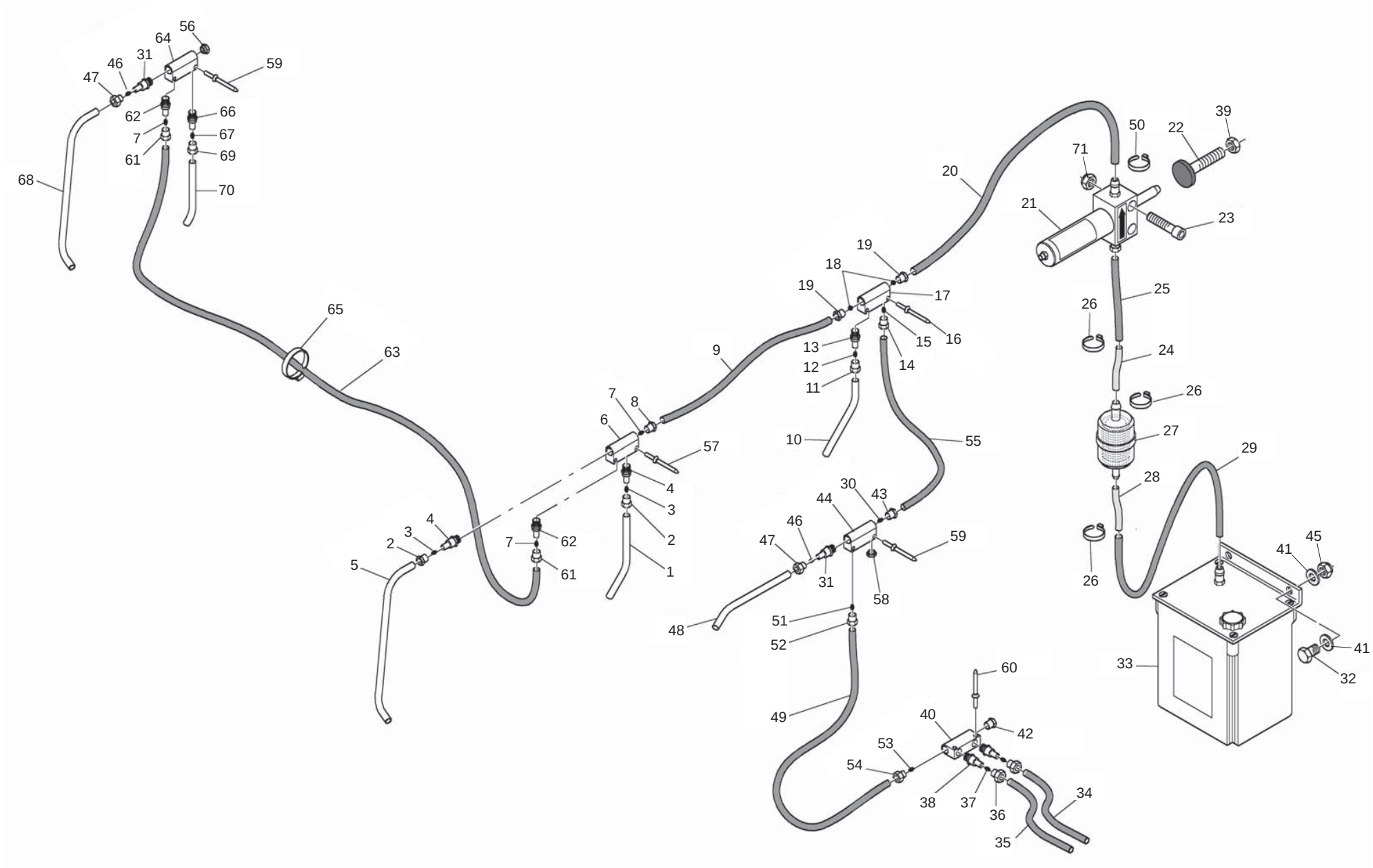

MASCHIO

cod. F07022343

IMPIANTO OLIATURA AUTOMATICA CUT
AUTOMATIC OILING SYSTEM CUT

TAV_400

Pos.	Cod.	Descrizione	Description	Description	Benennung	Descripcion
1	B0H000129R	TUBETTO IN RAME 4 L=90	COPPER PIPE 4 L=9	PETIT TUYAU EN CUIVRE DIAM. 4	KUPFER ROEHRCHEN 4 L=9	
2	B0H600014R	RACCORDO INIETTORE PER TUBO 4	INJECTOR UNION FOR PIPE	RACCORD INJECTEUR POUR TUYAU D	EINSPRITZDUESENANSCHLUSS	
3	B0H600013R	DOPPI CONI PER TUBO 4	DOUBLE CONE FOR PIPE	DOUBLE CONES POUR TUYAU 4	DOPPELTER KEGEL FUER SCHLAUCH	
4	B0HE00003R	INIETTORE TIPO E	TYPE E INJECTOR	GICLEUR TYPE E	SPRITZDUESE	
5	B0H000130R	TUBETTO IN RAME 4 L=150	COPPER PIPE 4 L=1	PETIT TUYAU EN CUIVRE DIAM 4 L	KUPFER ROEHRCHEN 4 L=1	
6	B0H000102R	DISTRIBUTORE UNILAT. 4 VIE	UNILATERAL DISTRIBUTOR	DISTRIBUTEUR UNILATERAL 4 VOIE	EINSEITIGER VERTEILER	
7	B0H600013R	DOPPI CONI PER TUBO 4	DOUBLE CONE FOR PIPE	DOUBLE CONES POUR TUYAU 4	DOPPELTER KEGEL FUER SCHLAUCH	
8	B0H600013R	DOPPI CONI PER TUBO 4	DOUBLE CONE FOR PIPE	DOUBLE CONES POUR TUYAU 4	DOPPELTER KEGEL FUER SCHLAUCH	
9	B0H000132R	TUBETTO IN NYLON 4 L=750	NYLON PIPE 4 L=750	PETIT TUYAU EN NYLON DIAM 4 L=	KLEINE ROEHRE AUS NYLON J4 L=7	
10	B0H000129R	TUBETTO IN RAME 4 L=90	COPPER PIPE 4 L=9	PETIT TUYAU EN CUIVRE DIAM. 4	KUPFER ROEHRCHEN 4 L=9	
11	B0H600014R	RACCORDO INIETTORE PER TUBO 4	INJECTOR UNION FOR PIPE	RACCORD INJECTEUR POUR TUYAU D	EINSPRITZDUESENANSCHLUSS	
12	B0H600013R	DOPPI CONI PER TUBO 4	DOUBLE CONE FOR PIPE	DOUBLE CONES POUR TUYAU 4	DOPPELTER KEGEL FUER SCHLAUCH	
13	B0HE00003R	INIETTORE TIPO E	TYPE E INJECTOR	GICLEUR TYPE E	SPRITZDUESE	
14	B0H600016R	RACC. X TUBO 4RIF.ILC 04.102.	UNION FOR PIPE 4RI	RACCORD POUR TUYAU DIAM 4	VERBINDUNGSTUECK FUR SCHLAUCH	
15	B0H600013R	DOPPI CONI PER TUBO 4	DOUBLE CONE FOR PIPE	DOUBLE CONES POUR TUYAU 4	DOPPELTER KEGEL FUER SCHLAUCH	
16	B01000012R	RIVETTO STR. 6,4X22 ACCIAIO	RIVET	RIVET	ABREISSNIETEN 6X26	
17	B0H000102R	DISTRIBUTORE UNILAT. 4 VIE	UNILATERAL DISTRIBUTOR	DISTRIBUTEUR UNILATERAL 4 VOIE	EINSEITIGER VERTEILER	
18	B0H600013R	DOPPI CONI PER TUBO 4	DOUBLE CONE FOR PIPE	DOUBLE CONES POUR TUYAU 4	DOPPELTER KEGEL FUER SCHLAUCH	
19	B0H600016R	RACC. X TUBO 4RIF.ILC 04.102.	UNION FOR PIPE 4RI	RACCORD POUR TUYAU DIAM 4	VERBINDUNGSTUECK FUR SCHLAUCH	
20	B0H000135R	TUBETTO IN NYLON 4 L=1500	NYLON PIPE 4 L=1500	PETIT TUYAU EN NYLON DIAM 4 L=	KLEINE ROEHRE IN NYLON J4 L=15	
21	B0H400007R	POMPA PIST PORT.6CCX10MM CORSA	PISTON PUMPT	POMPE PISTON	KOLBENPUMPE	
22	B00533162R	SPINTORE KIT OLIATURA	OILING KIT FORCER	POUSSEUR KIT HUILAGE	BLOCKDRUECKER KIT OELER	
23	B00400850R	VITE M8X1,25X50 U5931 8.8BR	SCREW	VIS	SCHRAUBE M8X50.8.8	
24	B0H000023R	TUBETTO COLLEGAMENTO FILTRO	CONNECTION PIPE	PETIT TUBE JONCTION FILTRE	VERBINDUNGSSCHLAUCH	
25	B0H000239R	TUBETTO IN NYLON 6 L=500	NYLON HOSE	TUYAU EN NYLON DIAM 6 L=500	NYLON ROEHRCHEN	
26	B0E600026R	FASCETTA 10,4X 10,7 CE09 NORMA	CLAMP 8,8X9,3 HLS A HILLS	BANDE 8,8X9,3	MANSCHETTE 8,8X9,3 HLS A HILLS	
27	B0H000022R	FILTRO BENZINA MAXIFISPINO	FILTER MAXIFIS	FILTRE ESSENCE	BENZINFILTER MAXIFIS	
28	B0H000023R	TUBETTO COLLEGAMENTO FILTRO	CONNECTION PIPE	PETIT TUBE JONCTION FILTRE	VERBINDUNGSSCHLAUCH	
29	B0H000136R	TUBETTO IN NYLON 6 L=180	NYLON PIPE 6 L=300	PETIT TUYAU EN NYLON DIAM 6 L=	KLEINE ROEHRE AUS NYLON J4 L=2	
30	B0H600013R	DOPPI CONI PER TUBO 4	DOUBLE CONE FOR PIPE	DOUBLE CONES POUR TUYAU 4	DOPPELTER KEGEL FUER SCHLAUCH	
31	B0HE00003R	INIETTORE TIPO E	TYPE E INJECTOR	GICLEUR TYPE E	SPRITZDUESE	
32	B00180620R	VITE M6X1X20 U5739 8.8ZN	SCREW	VIS	SCHRAUBE	
33	B04800000R	SERB.NYLON PER POMPA PISTONERI	NYLON TANK PUMP PISTONERI	RESERVOIR	OELBEHAELTER	
34	B0H000129R	TUBETTO IN RAME 4 L=90	COPPER PIPE 4 L=9	PETIT TUYAU EN CUIVRE DIAM. 4	KUPFER ROEHRCHEN 4 L=9	
35	B0H000131R	TUBETTO IN RAME 4 L=190	COPPER PIPE 4 L=1	PETIT TUYAU EN CUIVRE DIAM 4 L	KUPFER ROEHRCHEN 4 L=1	
36	B0H600014R	RACCORDO INIETTORE PER TUBO 4	INJECTOR UNION FOR PIPE	RACCORD INJECTEUR POUR TUYAU D	EINSPRITZDUESENANSCHLUSS	
37	B0H600013R	DOPPI CONI PER TUBO 4	DOUBLE CONE FOR PIPE	DOUBLE CONES POUR TUYAU 4	DOPPELTER KEGEL FUER SCHLAUCH	
38	B0HE00003R	INIETTORE TIPO E	TYPE E INJECTOR	GICLEUR TYPE E	SPRITZDUESE	
39	F01200293R	DADO M12X1,75 U5588 CL8 ZN	NUT M12X1,75 U5588 6S ZN	ECROU M12X1,75 U5588 6S ZN	MUTTER M12X1,75 U5588 6S ZN	TUERCA M12X1,75 U5588 6S ZN
40	B0H000102R	DISTRIBUTORE UNILAT. 4 VIE	UNILATERAL DISTRIBUTOR	DISTRIBUTEUR UNILATERAL 4 VOIE	EINSEITIGER VERTEILER	
41	F01410037R	ROS.M6 6,4X12,5X1,6 U6592 ZN	WASHER M6 6,4X12,5X1,6 U6592ZN	RONDEL.M6 6,4X12,5X1,6 U6592ZN	SCHEIB.M6 6,4X12,5X1,6 U6592ZN	ARAND.M6 6,4X12,5X1,6 U6592 ZN
42	B0H600015R	TAPPORIF.ILC 05.001.0	PLUG	BOUCHON	STOEPSEL	
43	B0H600016R	RACC. X TUBO 4RIF.ILC 04.102.	UNION FOR PIPE 4RI	RACCORD POUR TUYAU DIAM 4	VERBINDUNGSTUECK FUR SCHLAUCH	
44	B0H000102R	DISTRIBUTORE UNILAT. 4 VIE	UNILATERAL DISTRIBUTOR	DISTRIBUTEUR UNILATERAL 4 VOIE	EINSEITIGER VERTEILER	
45	B00920106R	DADO M6X1 D985 8ZN	NUT	ECROU	SELBSTSICHERNDE MUTTER M6-5S	
46	B0H600013R	DOPPI CONI PER TUBO 4	DOUBLE CONE FOR PIPE	DOUBLE CONES POUR TUYAU 4	DOPPELTER KEGEL FUER SCHLAUCH	
47	B0H600014R	RACCORDO INIETTORE PER TUBO 4	INJECTOR UNION FOR PIPE	RACCORD INJECTEUR POUR TUYAU D	EINSPRITZDUESENANSCHLUSS	
48	B0H000128R	TUBETTO IN RAME 4 L=120	COPPER PIPE 4 L=1	PETIT TUYAU EN CUIVRE DIAM. 4	KUPFER ROEHRCHEN 04 L=1	
49	B0H000133R	TUBETTO IN NYLON 4 L=420	NYLON PIPE 4 L=420	PETIT TUYAU EN NYLON DIAM 4 L=	NYLONROEHRCHEN 4 L=420	
50	F05150055R	FASCETTA POLYA. 3,6X200 NERA	WHITE BAND	BANDE BIANCHE	WEIBE BAND	CINTA BLANCA
51	B0H600013R	DOPPI CONI PER TUBO 4	DOUBLE CONE FOR PIPE	DOUBLE CONES POUR TUYAU 4	DOPPELTER KEGEL FUER SCHLAUCH	
52	B0H600016R	RACC. X TUBO 4RIF.ILC 04.102.	UNION FOR PIPE 4RI	RACCORD POUR TUYAU DIAM 4	VERBINDUNGSTUECK FUR SCHLAUCH	
53	B0H600013R	DOPPI CONI PER TUBO 4	DOUBLE CONE FOR PIPE	DOUBLE CONES POUR TUYAU 4	DOPPELTER KEGEL FUER SCHLAUCH	
54	B0H600016R	RACC. X TUBO 4RIF.ILC 04.102.	UNION FOR PIPE 4RI	RACCORD POUR TUYAU DIAM 4	VERBINDUNGSTUECK FUR SCHLAUCH	
55	B0H000240R	TUBETTO IN NYLON 4 L=1200	NYLON HOSE	TUYAU EN NYLON DIAM 4 L=1200	NYLON ROEHRCHEN	
56	B0H600015R	TAPPORIF.ILC 05.001.0	PLUG	BOUCHON	STOEPSEL	
57	B01000012R	RIVETTO STR. 6,4X22 ACCIAIO	RIVET	RIVET	ABREISSNIETEN 6X26	

TAV_400

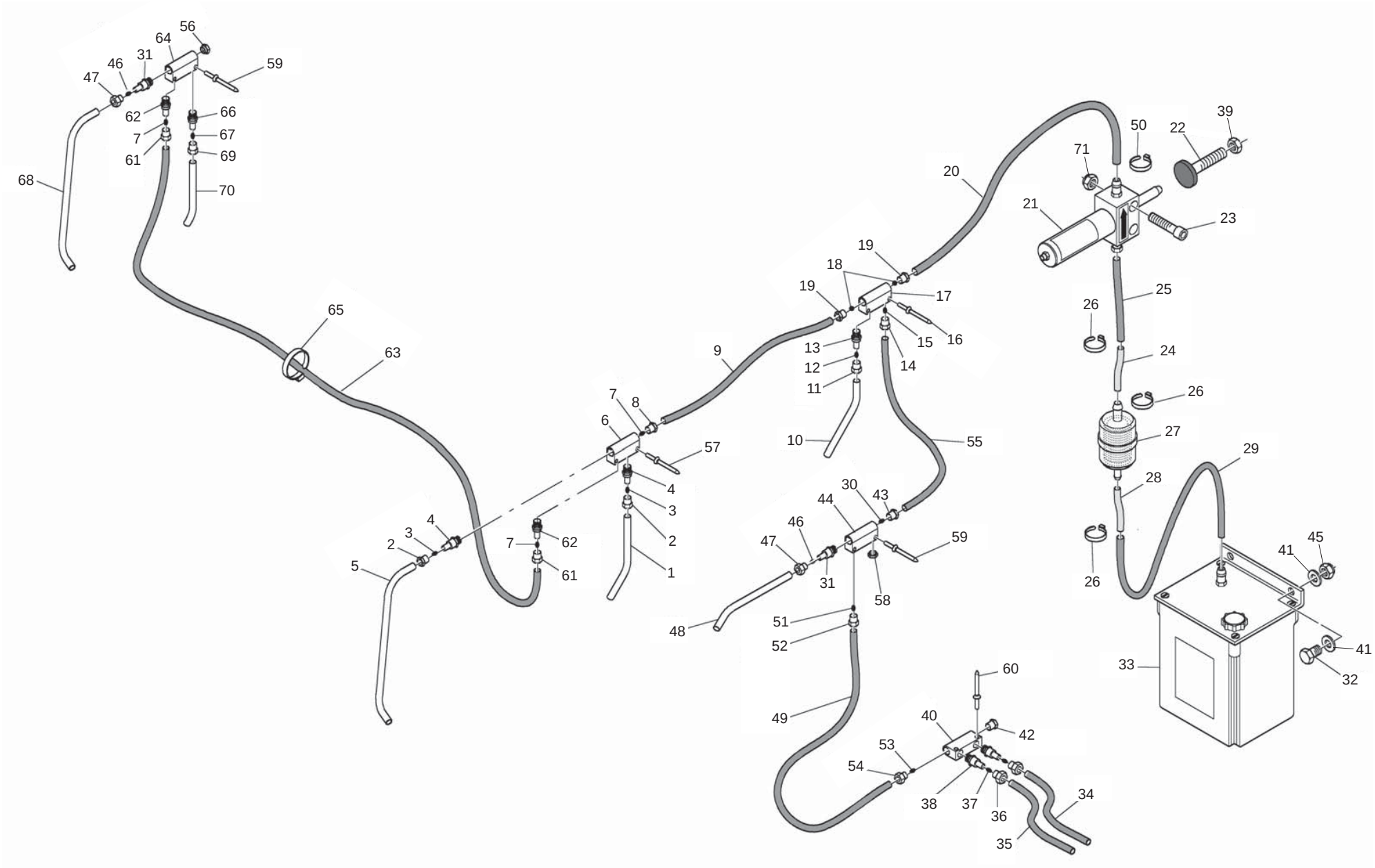

MASCHIO

cod. F07022343

IMPIANTO OLIATURA AUTOMATICA CUT
AUTOMATIC OILING SYSTEM CUT

Pos.	Cod.	Descrizione	Description	Description	Benennung	Descripcion
58	B0H600015R	TAPPORIF.ILC 05.001.0	PLUG	BOUCHON	STOEPSEL	
59	B01000012R	RIVETTO STR. 6,4X22 ACCIAIO	RIVET	RIVET	ABREISSNIETEN 6X26	
60	B01000012R	RIVETTO STR. 6,4X22 ACCIAIO	RIVET	RIVET	ABREISSNIETEN 6X26	
61	B0H600016R	RACC. X TUBO 4RIF.ILC 04.102.	UNION FOR PIPE 4RI	RACCORD POUR TUYAU DIAM 4	VERBINDUNGSTUECK FUR SCHLAUCH	
62	B0H600013R	DOPPI CONI PER TUBO 4	DOUBLE CONE FOR PIPE	DOUBLE CONES POUR TUYAU 4	DOPPELTER KEGEL FUER SCHLAUCH	
63	B0H000241R	TUBETTO IN NYLON 4 L=2500	NYLON HOSE	TUYAU EN NYLON DIAM 4 L=2500	NYLON ROEHRCHEN	
64	B0H000102R	DISTRIBUTORE UNILAT. 4 VIE	UNILATERAL DISTRIBUTOR	DISTRIBUTEUR UNILATERAL 4 VOIE	EINSEITIGER VERTEILER	
65	F05150055R	FASCETTA POLYA. 3,6X200 NERA	WHITE BAND	BANDE BIANCHE	WEIBE BAND	CINTA BLANCA
66	B0HE00003R	INIETTORE TIPO E	TYPE E INJECTOR	GICLEUR TYPE E	SPRITZDUESE	
67	B0H600013R	DOPPI CONI PER TUBO 4	DOUBLE CONE FOR PIPE	DOUBLE CONES POUR TUYAU 4	DOPPELTER KEGEL FUER SCHLAUCH	
68	B0H000130R	TUBETTO IN RAME 4 L=150	COPPER PIPE 4 L=1	PETIT TUYAU EN CUIVRE DIAM 4 L	KUPFER ROEHRCHEN 4 L=1	
69	B0H600014R	RACCORDO INIETTORE PER TUBO 4	INJECTOR UNION FOR PIPE	RACCORD INJECTEUR POUR TUYAU D	EINSPRITZDUESENANSCHLUSS	
70	B0H000128R	TUBETTO IN RAME 4 L=120	COPPER PIPE 4 L=1	PETIT TUYAU EN CUIVRE DIAM. 4	KUPFER ROEHRCHEN 04 L=1	
71	B00920208R	DADO M8X1 D985 8ZN	NUT M8X1 D985 8ZN	ECROU	SELBSTSICHERNDE MUTTER M8-5S	

TAV_410

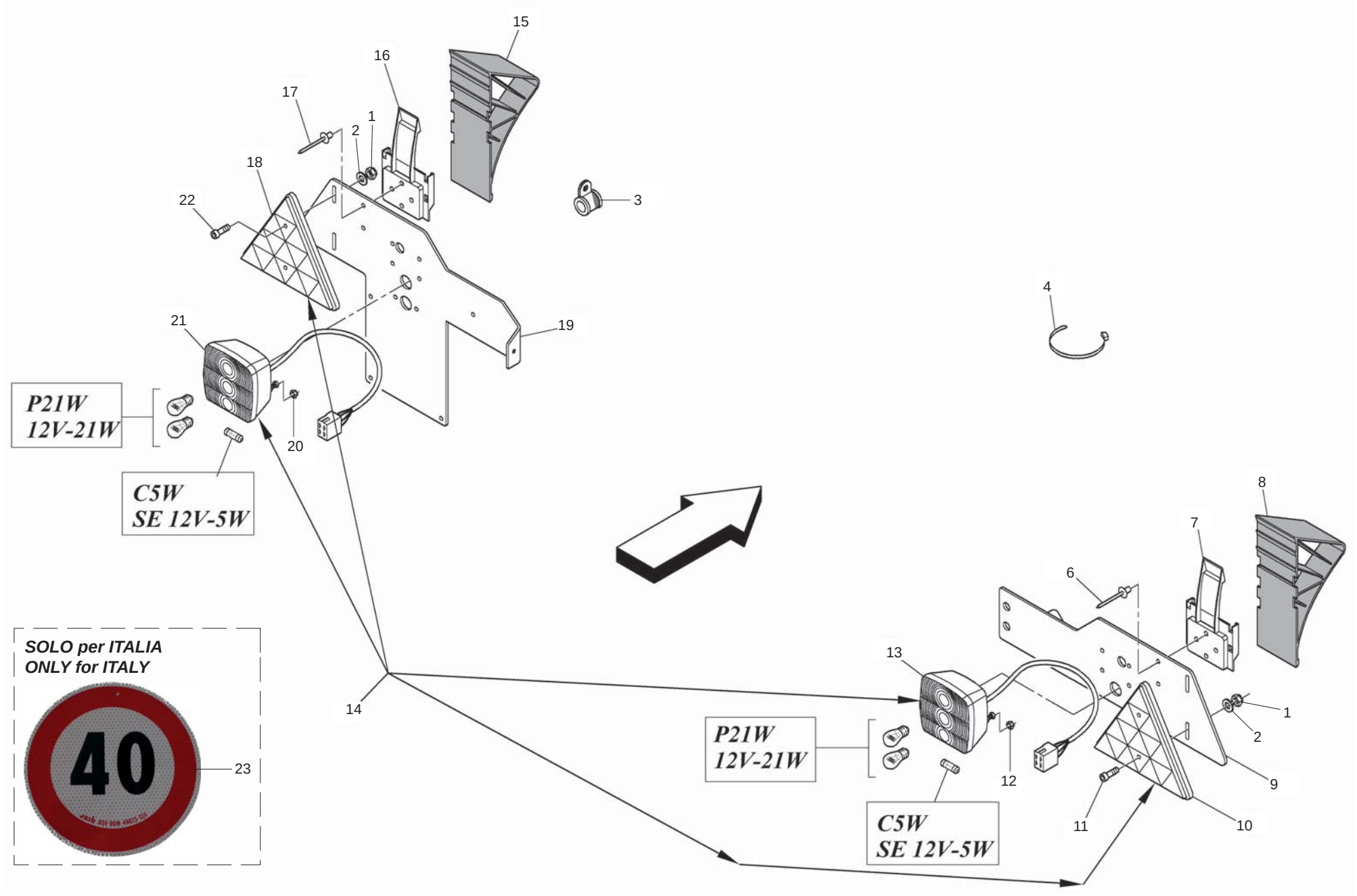

MASCHIO

cod. F07022343

IMPIANTO LUCI + CUNEI
LIGHTS PLANT + CHOCKS

TAV_410

Pos.	Cod.	Descrizione	Description	Description	Benennung	Descripcion
1	F01230202R	DADO M10X 1,5 D985 8 ZN	NUT M10 D985	ECROU AUTOBL. M10	SELBSTSPERR.MUTTER M10	DADO AUTOBL. M10
2	F01410062R	ROS.M10 10,5X 18X 2 U6592 ZN	WASHER M10 10,5X 18X 2 U6592	RONDELLE M10 10,5X18X2 ZN	DICHTUNGSRING M10 10,5X18X2 ZN	RONDANA M10 10,5X18X2 ZN
3	F02300073R	MORS.FERMATUB. D. 8-W1 FG 8 20	TUBE CLAMP			
4	F05150055R	FASCETTA POLYA. 3,6X200 NERA	WHITE BAND	BANDE BIANCHE	WEIBE BAND	CINTA BLANCA
6	B01000011R	RIVETTO STR. 6X12 U9200A AL	RIVET 6X12 U9200A AL	RIVET	ABREISSNIETEN 6X15	
7	F02250717R	SUPPORTO CUNEO PLA	SUPPORT WEDGE PLA			
8	F02250716R	CUNEO FERMO MACCHINA PLA	WEDGE STOP MACHINE PLA			
9	B0C000082R	PIASTRA ATTACCO FANALE DESTRO	RIGHT HEAD LIGHT COUPLING PLAT	TOLE ATTELAGE FEU DROITE	ANSCHLUSSPLATTE BELEUCHTUNG RE	
10	B0E000025R	CATADIOTRO TRIANGOLARE ROSSO	RED TRIANGULAR RETROREFLECTOR	CATADIOPTRE TRIANGULAIRE ROUGE	DREIECKIGER ROTER RUECKSTRAHLE	
11	B00181015R	VITE M10X1,5 X 16 U5739 8.8ZN	SCREW	VIS	SCHRAUBE	
12	B00920005R	DADO AUTOB.BASSO M 5-5S DIN985	NUT	ECROU	SELBSTSICHERNDE MUTTER M5-5S	
13	B0E000007R	FANALE POST. VST_018	REAR LIGHT	FEU POSTERIEUR	HECKLAMPE	
14	B0E731597R	GRUPPO LUCI ST018	LIGHT KIT	GROUPE DE FEUS	LICHTENANLAGE	
15	F02250716R	CUNEO FERMO MACCHINA PLA	WEDGE STOP MACHINE PLA			
16	F02250717R	SUPPORTO CUNEO PLA	SUPPORT WEDGE PLA			
17	B01000011R	RIVETTO STR. 6X12 U9200A AL	RIVET 6X12 U9200A AL	RIVET	ABREISSNIETEN 6X15	
18	B0E000025R	CATADIOTRO TRIANGOLARE ROSSO	RED TRIANGULAR RETROREFLECTOR	CATADIOPTRE TRIANGULAIRE ROUGE	DREIECKIGER ROTER RUECKSTRAHLE	
19	B0C000081R	PIASTRA ATTACCO FANALE SX	LEFT HEAD LIGHT COUPLING PLATE	TOLE ATTELAGE FEU GAUCHE	ANSCHLUSSPLATTE BELEUCHTUNG LI	
20	B00920005R	DADO AUTOB.BASSO M 5-5S DIN985	NUT	ECROU	SELBSTSICHERNDE MUTTER M5-5S	
21	B0E000006R	FANALE CON LUCE TARGA VST_018	PLATE HEADLIGHT	FEU AVEC LUMIERE PLAQUE	LICHT FUER SCHILD	
22	F01020472R	VITE M10X1,5X25 U5739 8.8ZN	SCR. M10X1,5X25 U5739 8.8ZN	VIS M10X1,5X25 U5739 8.8 ZN	SCHRAUBE M10X1,5X25 U5739 8.8	TORNILLO 10X25 U5739 8.8 ZN
23	F20030261R	ETICH. LIMITE VELOCITA 40	SPEED LIMIT 40 LABEL			

TAV_420

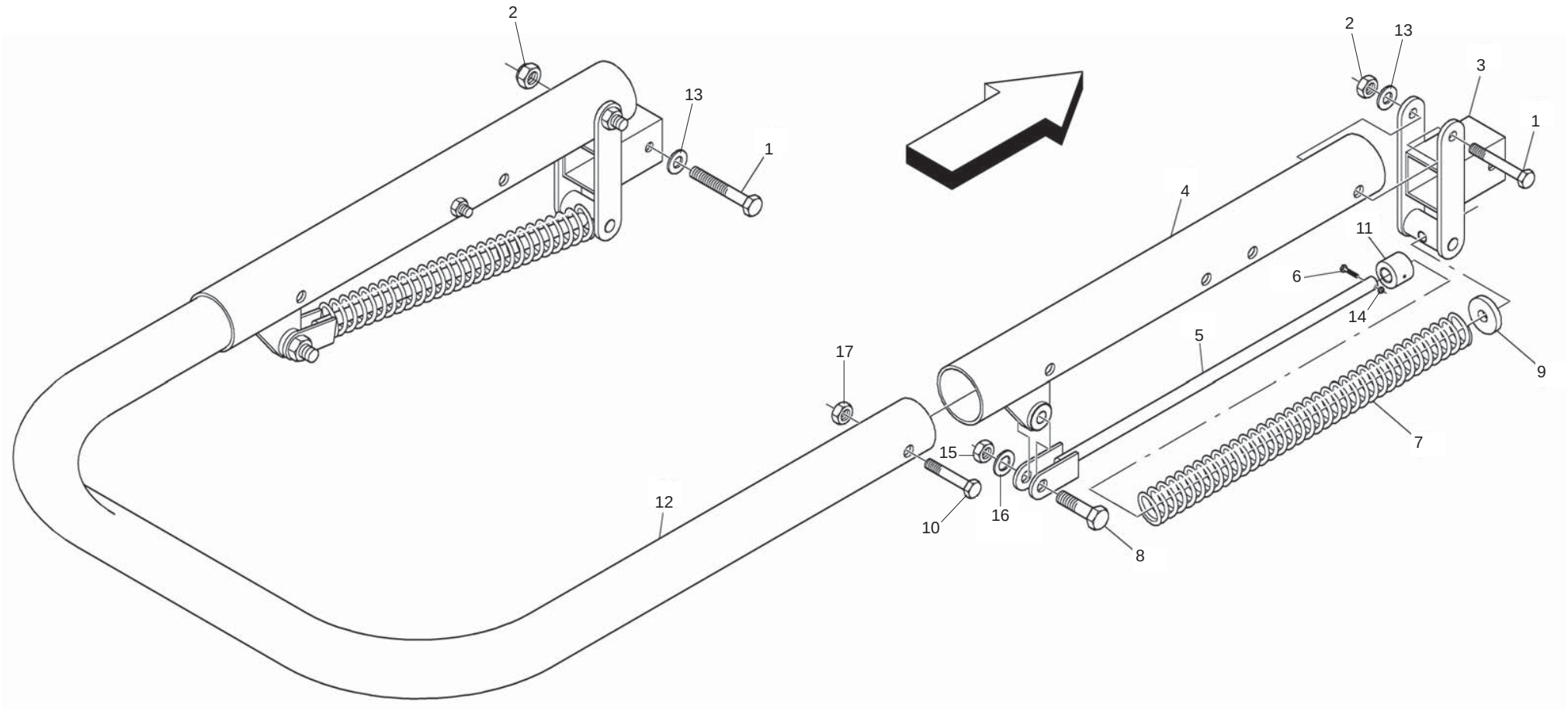

ESPULSORE
EJECTOR

TAV_420

Pos.	Cod.	Descrizione	Description	Description	Benennung	Descripcion
1	F01020989R	VITE M20X2,5X140 U5737 8.8 ZN	SCREW M20X2,5X140 U5737 8.8 ZN			
2	F01230259R	DADO M20X 2,5 U7474 CL.8 ZN	NUT M20X 2,5 U7474 CL.8 ZN			
3	B07S00971R	FULCRO	FULCRUM	POINT D APPUI	DREHPUNKT	
4	B07S00973R	BASE ESPULSORE	KNOCKOUT BASE	BASE EJECTEUR	AUSWERFER BASE	
5	B07S00972R	SOSTEGNO MOLLA	SPRING SUPPORT	SUPPORT RESSORT	FEDER LAGERUNG	
6	F01020160R	VITE M12X1,75X60 U5737 8.8ZN	SCR. M12X1,75X60 U5737 8.8ZN	VIS M12X1,75X60 U5737 8.8 ZN	SCHRA.M12X1,75X60 U5737 8.8 ZN	TORN. M12X1,75X60 U5737 8.8 ZN
7	B01800057R	MOLLA ESPULSORI	EJECTOR RESSORT	RESSORT EJECTEURS	AUSWERFER FEDER	
8	F01020309R	VITE M20X2,5X70 U5737 8.8ZN	SCR. M20X2,5X70 U5737 8.8ZN	VIS M20X2,5X70	SCHRAUBE M20X2,5X70	TORNILLO M20X2,5X70
9	B01510630R	RALLA 28 45 3	FIFTH WHEEL	BUTEE	SCHEIBE	
10	F01020264R	VITE M16X2X90 U5737 8.8ZN	SCR. M16X2X90 U5737 8.8ZN	VIS M16X2X90 5737 8.8 ZN	SCHRAUBE M16X2X90 5737 8.8 ZN	TORN. M16X2X90 5737 8.8 ZN
11	B01300593R	BUSSOLA	SLEEVE	DOUILLE	BUCHSE	
12	B0C003083R	TERMINALE ESPULSORE	EJECTOR LIMIT SWITCH	BORNE EJECTEUR	AUSWERFERENDE	
13	F01410124R	ROS.M20 21X 37X 3 U6592 ZN	WASHER M20 21X 37X 3 U6592 ZN	RONDEL.M20 21X37X3 ZN	MUTTER M20 21X 37X 3 U6592 ZN	ARANDELA M20 21X37X3 U6592 ZN
14	F01230213R	DADO M12X1,75 U7474 CL8 ZN	NUT M12X1,75 U7474 6SZN	ECROU AUTOBL. M12	SELBSTSPERR.MUTTER M12	DADO AUTOBL. M12
15	F01230259R	DADO M20X 2,5 U7474 CL.8 ZN	NUT M20X 2,5 U7474 CL.8 ZN			
16	F01410124R	ROS.M20 21X 37X 3 U6592 ZN	WASHER M20 21X 37X 3 U6592 ZN	RONDEL.M20 21X37X3 ZN	MUTTER M20 21X 37X 3 U6592 ZN	ARANDELA M20 21X37X3 U6592 ZN
17	B00920516R	DADO M16X 1,5 D985 6S ZN	NUT M16X1,5 D985 6S ZN	ECROU	SELBSTSICHERNDE MUTTER M16-5S	

TAV_430

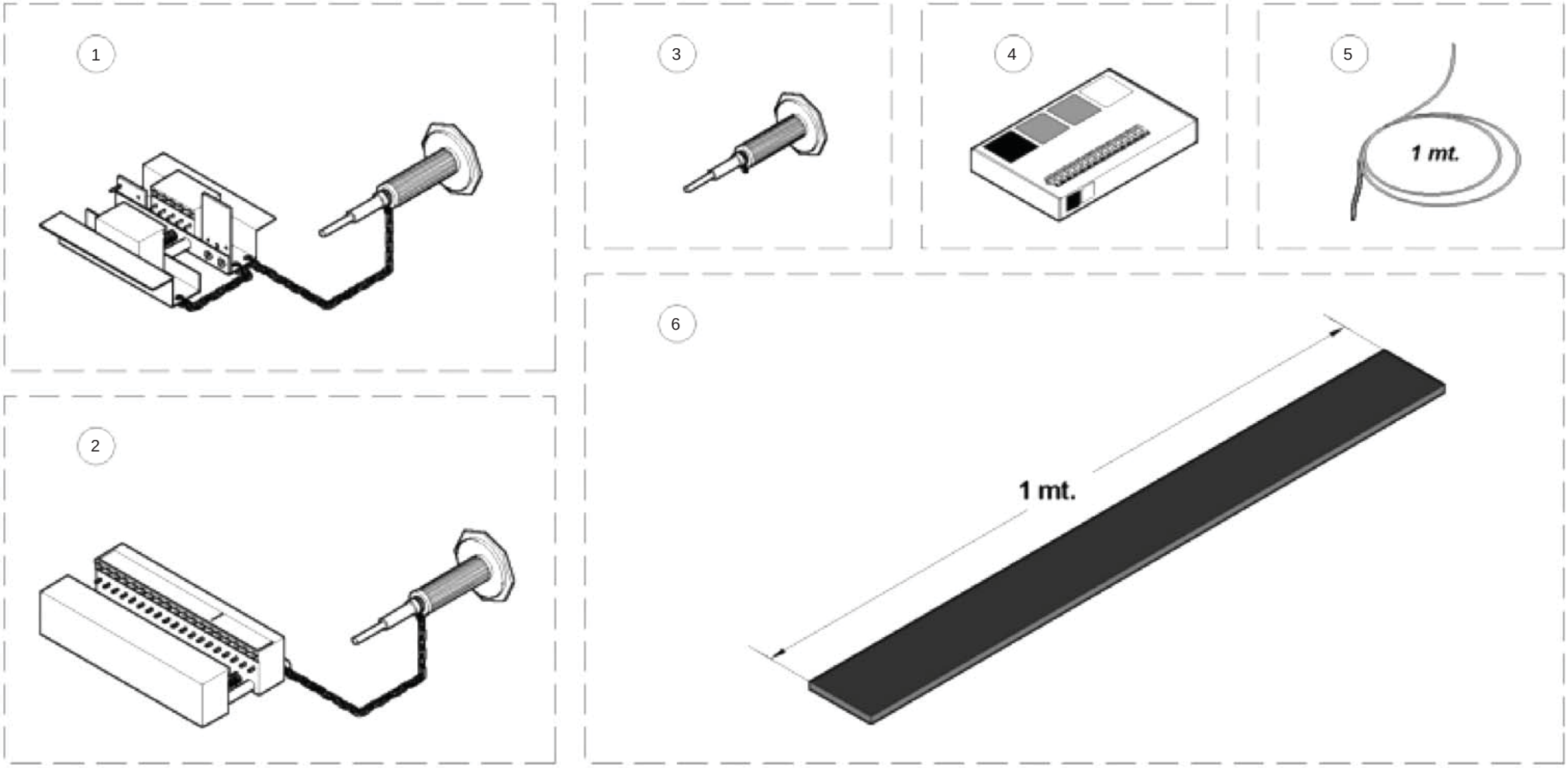

GRAFFATURA
STAPLING DEVICE

TAV_430

Pos.	Cod.	Descrizione	Description	Description	Benennung	Descripcion
1	B0ZAP0025R	GRAFFATRICE MATO PROFI 5	GRAFFATRICE MATO PROFI 5 .			
2	B0ZAP0026R	GRAFFATRICE MATO PROFI 19	STAPLER MATO PROFI 19 .		STAPLER MATO PROFI 19	
3	B07U00049R	SEPAR.PUNCH H X VICE LACERS	PUNCH	POINCON	PUNZEN	
4	B09940018R	SCAT. GRAFFE MATO U24BS-12 13	MATO LACINGS BOX	BOITE AGRAF.MATO U24BS-12 13	SCHACHTEL MIT KLAMMERN MATO	
5	B09962005R	CAVETTO GIUNZIONE MT.1	WIRE 2,5 PLAST.L.1MT	CABLE	KABEL 49 SCHNUREN	
6	B07600073R	SPEZZONE CINGHIA MT 01	BELT PIECE L=1000	PIECE DE COURROIE	GURT TEILSTUCK L=1000	

TAV_440

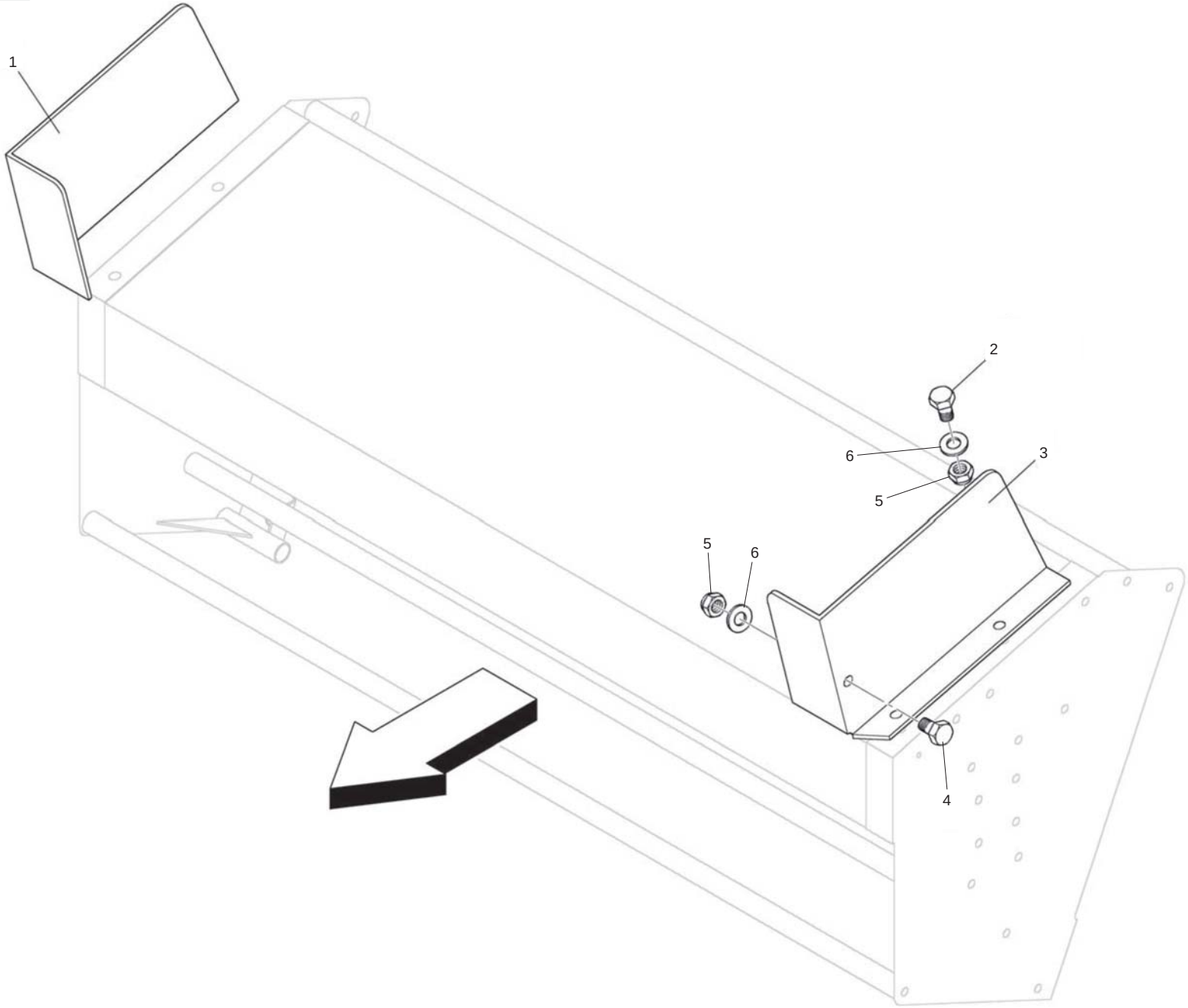

KIT STAFFE SUPPLEMENTARI PER ROTOLO RETE
ADDITIONAL NET SUPPORT KIT

TAV_440

Pos.	Cod.	Descrizione	Description	Description	Benennung	Descripcion
1	B0C003524R	CORPO DX SECONDO ROTOLO	EXTRA ROLL RIGHT BODY	CORPS DROIT ROULEAU SUPPL.	KOERPER RECHTS ZWEITE ROLLE	
2	F01020472R	VITE M10X1,5X25 U5739 8.8ZN	SCR. M10X1,5X25 U5739 8.8ZN	VIS M10X1,5X25 U5739 8.8 ZN	SCHRAUBE M10X1,5X25 U5739 8.8	TORNILLO 10X25 U5739 8.8 ZN
3	B0C003523R	CORPO SX SECONDO ROTOLO	EXTRA ROLL LEFT BODY	CORPS GAUCHE ROULEAU SUPPL.	KOERPER LINKS ZWEITE ROLLE	
4	F01020472R	VITE M10X1,5X25 U5739 8.8ZN	SCR. M10X1,5X25 U5739 8.8ZN	VIS M10X1,5X25 U5739 8.8 ZN	SCHRAUBE M10X1,5X25 U5739 8.8	TORNILLO 10X25 U5739 8.8 ZN
5	F01230202R	DADO M10X 1,5 D985 8 ZN	NUT M10 D985	ECROU AUTOBL. M10	SELBSTSPERR.MUTTER M10	DADO AUTOBL. M10
6	F01410062R	ROS.M10 10,5X 18X 2 U6592 ZN	WASHER M10 10,5X 18X 2 U6592	RONDELLE M10 10,5X18X2 ZN	DICHTUNGSRING M10 10,5X18X2 ZN	RONDANA M10 10,5X18X2 ZN

TAV_450

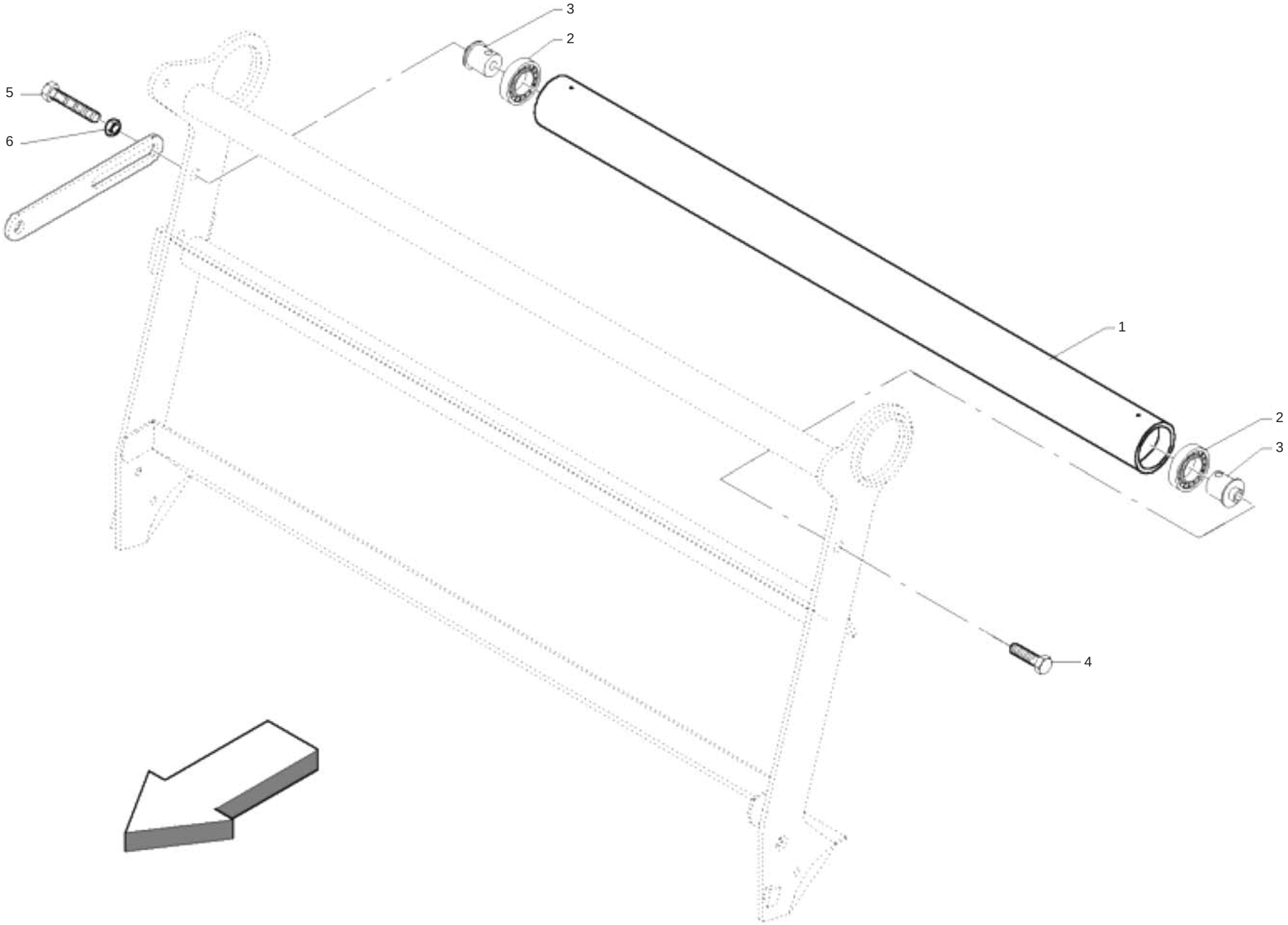

KIT FILM PLASTICO
PLASTIC FILM KIT

TAV_450

Pos.	Cod.	Descrizione	Description	Description	Benennung	Descripcion
1	B03500048R	RULLO FOLLE	IDLE ROLLER	ROULEAU FOU	UMLENKWALZE	
2	B02040002R	CUSCINETTO 6307-2RS CAT.KST004	BEARING	ROULEMENT CAT.KST004	LAGER 6307-2RS	
3	B03500047R	PERNO RULLO FOLLE	IDLE ROLLER GUDGEON	TOURILLON ROULEAU FOU	STIFT UMLENKWALZE	
4	F01020512R	VITE M12X1,75X35 U5739 8.8ZN	SCR. M12X1,75X35 U5739 8.8ZN	VIS M12X1,75X35 5739 8.8 ZN	SCHR. M12X1,75X35 5739 8.8 ZN	TORN. M12X1,75X35 5739 8.8 ZN
5	F01020524R	VITE M12X1,75X90 U5739 8.8ZN	SCR. M12X1,75X90 U5739 8.8ZN			
6	F01200293R	DADO M12X1,75 U5588 CL8 ZN	NUT M12X1,75 U5588 6S ZN	ECROU M12X1,75 U5588 6S ZN	MUTTER M12X1,75 U5588 6S ZN	TUERCA M12X1,75 U5588 6S ZN

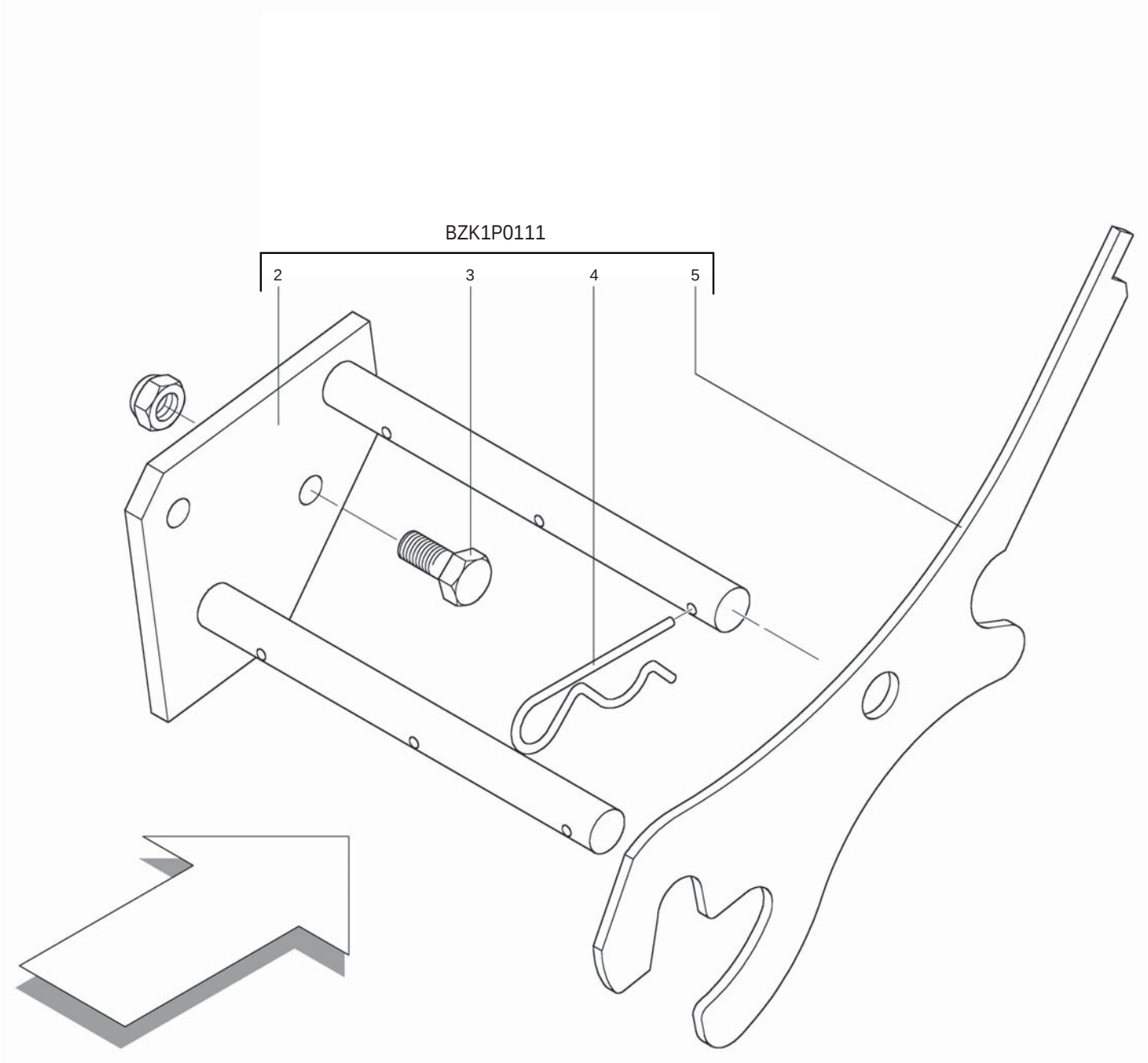
BZK1P0111
2
3
4
5

KIT FINTI COLTELLI
FAKE KNIVES KIT

TAV_460

Pos.	Cod.	Descrizione	Description	Description	Benennung	Descripcion
2	B07S01031R	PORTA COLT.	KNIFE HOLDER	PORTE-COUTEAUX	MESSERTRAEGER	
3	F01020510R	VITE M12X1,75X30 U5739 8.8ZN	SCR. M12X1,75X30 U5739 8.8ZN	VIS M12X1,75X30 U5739 8.8ZN	SCHRAU.M12X1,75X30 U5739 8.8ZN	TORN. M12X1,75X30 U5739 8.8ZN
4	F02200374R	COPIGLIA R 4X 82 ZN	SPRING SPLIT PIN 4X82	GOUPILLE 4X82	SPLINT 4X82	PASADOR 4X82
5	B0C005006R	FINTO COLT. CUT	BLANK KNIFE CUT	FAUX COUTEAU CUT	BLINDMESSER CUT	

TAV_470

(*) 18 = SOLO NORVEGIA
ONLY NORWAY

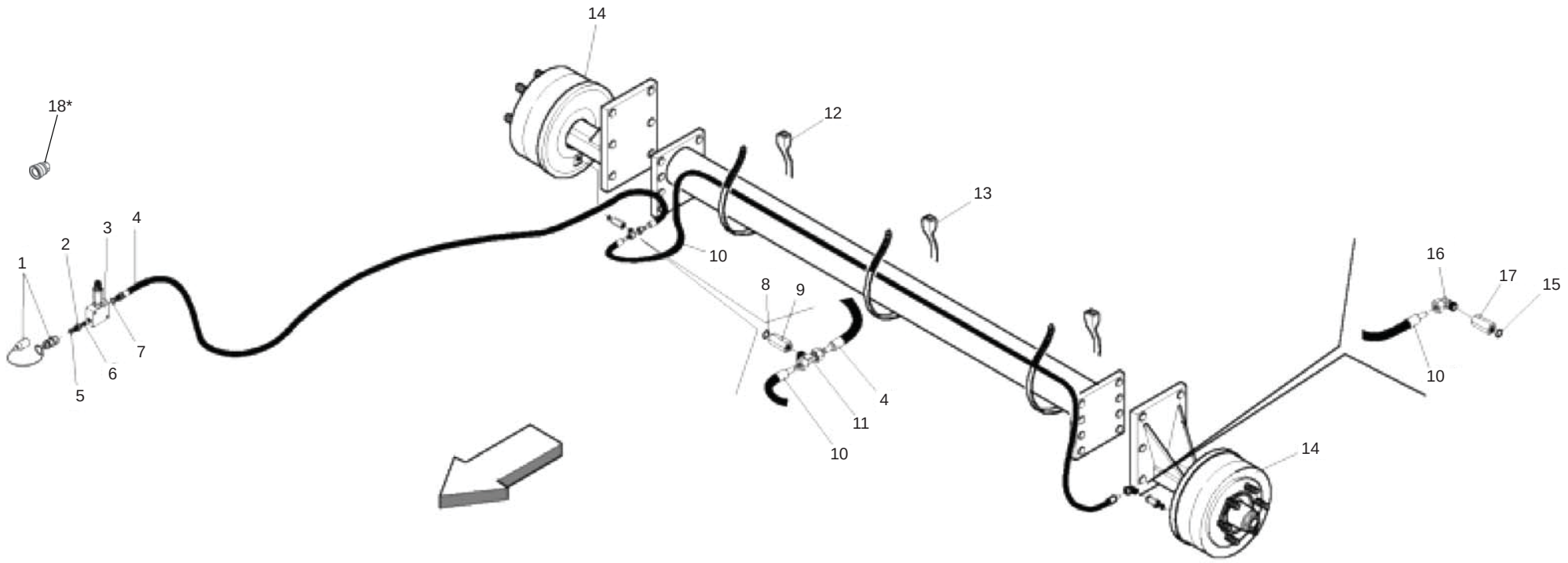

FRENO IDRAULICO
HYDRAULIC BRAKE

TAV_470

Pos.	Cod.	Descrizione	Description	Description	Benennung	Descripcion
1	B0H6000A0R	INNESTO RAP.NV 12GAS-M	QUICK CLUTCH	EMBRAYAGE	SCHNELLKUPPLUNG	
2	B0H6000ABR	NIPPLO RIDUZ.1 2 -3 8 RASTEL	NIPPLE	NIPPLE REDUCTION 1 2 - 3 8		
3	B0H000143R	VALV. DI RID. VRPRL2B38TS.SR	REDUCTION VALVE	VALVE DE REDUCTION VRPRL2B38TS	VENTIL	
4	B0H000097R	TUBO R1T 1 4 L. 5500	FLEXIBLE TUBE SAE 100 R1AT	TUYAU FLEXIBLE SAE 100 R1AT 1	ROEHRE FLEX SAE 100 R1AT 1 4	
5	B01442015R	ROS. 21 X27X1,5 RAME -1 2	WASHER	RONDELLE	BEILAGSCHEIBE 1 2	
6	B01441815R	ROS. 17 X23X1,5 RAME -3 8	WASHER	RONDELLE	SCHEIBE	
7	B01441815R	ROS. 17 X23X1,5 RAME -3 8	WASHER	RONDELLE	SCHEIBE	
8	B01441415R	RONDELLA IN RAME 1 4	WASHER	RONDELLE	BEILAGSCHEIBE 1 4 13X19X1,5	
9	B0H000162R	MANICOTTO DI RACCORDO	FITTING SLEEVE	MANCHON DE RACCORD	ANSCHLUSS	
10	B0H000091R	TUBO FLEX SAE 100 R1AT1 4L2050	FLEXIBLE TUBE SAE 100 R1AT	TUYAU FLEXIBLE SAE 100 R1AT 1	ROEHRE FLEX SAE 100 R1AT 1 4	
11	B0H000098R	RACCORDO T 10 TN 127-10LR	UNION T 10	RACCORD T 10	T.VERSCHRAUBUNG	
12	F05150055R	FASCETTA POLYA. 3,6X200 NERA	WHITE BAND	BANDE BIANCHE	WEIBE BAND	CINTA BLANCA
13	B0E600022R	FASCETTA LUMEFIX 4,8X340	CLAMP LUMEFIX 4,8X340			
14	B07100031R	MOZZO CON FRENO SPRINTER NEW	HUB WITH BRAKE	MOYEU AVEC FREIN NOUVELLE SPR	RADACHSE MIT BREMSE SPRINTER	
15	B01441415R	RONDELLA IN RAME 1 4	WASHER	RONDELLE	BEILAGSCHEIBE 1 4 13X19X1,5	
16	B0H000086R	RACCORDO L 10 TN94-10LR	UNION L 10	RACCORD L 10	ANSCHLUSSSTUECK L 10	
17	B0H000162R	MANICOTTO DI RACCORDO	FITTING SLEEVE	MANCHON DE RACCORD	ANSCHLUSS	
18	B0H000223R	INNESTO RAP FEM VF0 12 GAS	INNESTO RAP FEM VF0 12 GAS .	EMBRAYAGE RAPIDE FEMELLE		

TAV_480

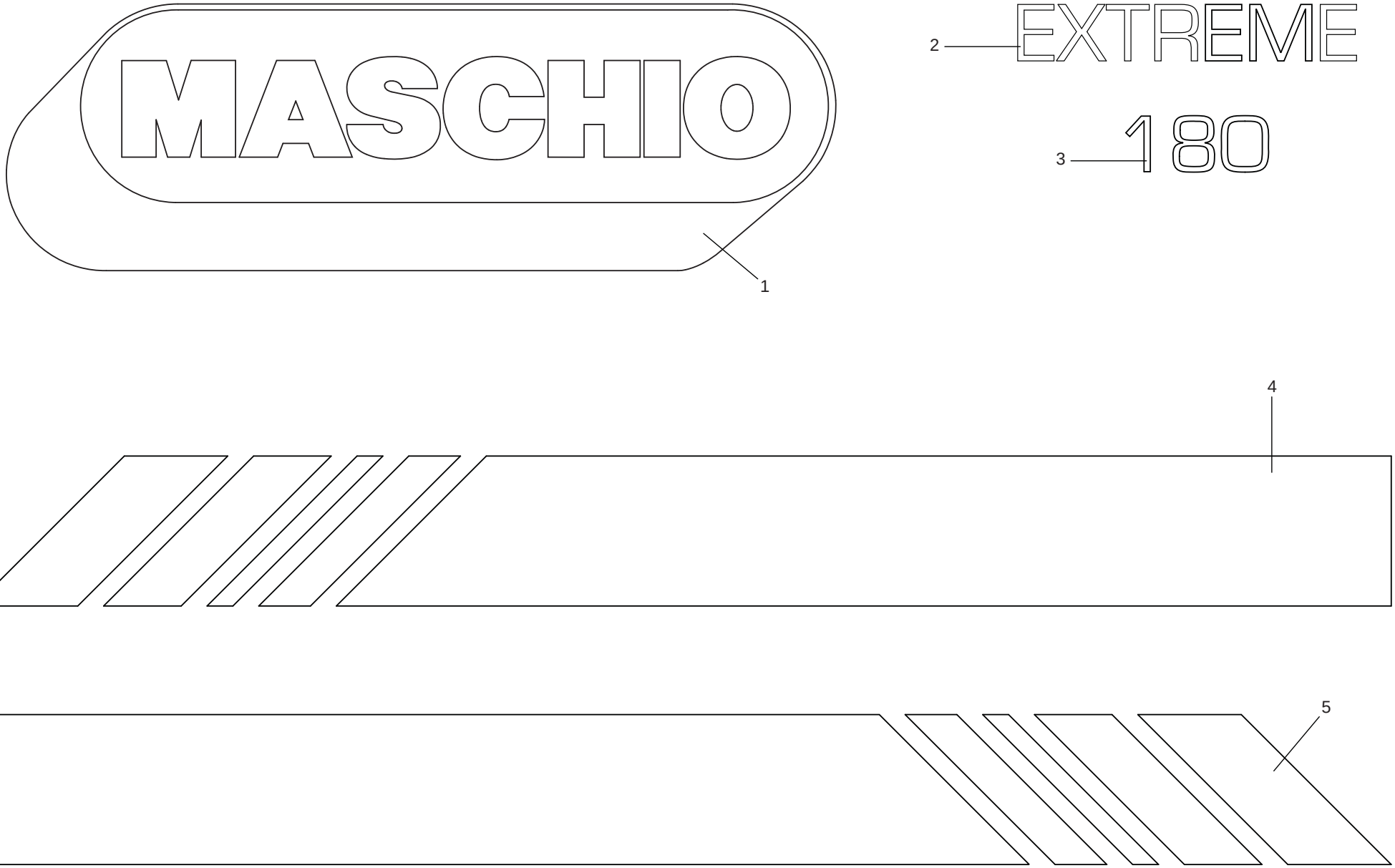

DECAL "LOGO"
DECAL "LOGO"

TAV_480

Pos.	Cod.	Descrizione	Description	Description	Benennung	Descripcion
1	F20010506R	ETICH.ID.MASCHIO802X267 BIANCO	ID LABEL MASCHIO 802X267 WHITE	DECAL MASCHIO 802X267 BLANC	AUFKLEBER MASCHIO 802X267 WEI	
2	F20020560R	ETICHETTA EXTREME	DECAL EXTREME	DECAL EXTREME	AUFKLEBER EXTREME	
3	F20020639R	DECAL 180	DECAL			
4	F20020619R	DECAL FASCIA DX SPRINTER	DECAL.BAND RH SPRINTER 165			
5	F20020620R	DECAL FASCIA SX SPRINTER	DECAL.BAND LF SPRINTER 165			

TAV_490

1

2

3

4

5

6

7

8

9

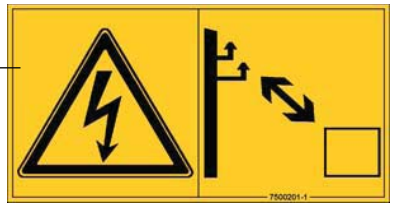
11

12

15

16

14

13

DECAL "CE"
DECAL "CE"

TAV_490

Pos.	Cod.	Descrizione	Description	Description	Benennung	Descripcion
1	B07500185R	ET CONSULT IL LIBRETTO OP.	DECAL SEE OPERATOR S MANUAL	DECAL LIRE LE LIVRE OPERATEU	AUFKLEBE BUCH ANSCHLAGEN	
2	B07500186R	ET TOGLIERE LA CHIAVE...	DECAL TAKE THE WRENCH AWAY	DECAL CHASSER LA CLEF	AUFKLEBE SCHLUSSEL ZIEHEN	
3	B07500208R	ET MANO-OLIO SOTTO PRESSIONE	DECAL OIL UNDER PRESSURE HAND	DECAL MAIN-HUILE SOUS PRESSIO	AUFKLEBE HAND-OEL	
4	B07500187R	ET 540 GIRI - RICC SX NORMA	DECAL 540RPM - LEFT BURR	DECAL 540 T H-SENS DE ROTATIO	AUFKLEBE 540 RPM	
5	B07500199R	ET PERSONA SCHIACC.-ZONA	DECAL SQUEEZED PERSON	DEECAL PERSONNE ECRASEE -ZONE	AUFKLEBE GEQUETSCHER MANN	
6	B07500203R	ET TAGLIO MANO-STOP NORMA CEE	DECAL HAND CUT _ STOP	DECAL COUPE MAINE - STOP	AUFKLEBE HANDSCHNITT - HALT	
7	B07500221R	ET PIEDE TAGLI-STARE DISTANTE	WARNING CUT FEET DECAL	DECAL PIED COUPE	AUFKLEBE GESCHNITTER FUSS	
8	B07500207R	ET PERSONA INTRAPP. PICK-UP	TRAPPED MAN DECAL	DECAL PERSONNE PIEGEE-PICK-UP	AUFKLEBE GEFANGTENER MANN	
9	B07500198R	ET PERSONA SCHIAC-SOTTO PORTE	SQUEEZED MAN DECAL	DECAL PERSONNE ECRASE -SOUS	AUFKLEBE GEQUETSCHER MANN	
11	B07500201R	ET SCOSSA ELETTR NORMA CEE	ELECTRIC SHOCK DECAL	DECAL SECOUSSE ELECTRIQUE	AUFKLEBER STROMSTOSS	
12	B07500212R	ET PERSONA SCHIACC-BALLA NORM	SQUEEZED MAN-BALE DECAL	DECAL PERSONNE ECRASEE -BALLE	AUFKLEBER GEQUERSCHTER MANN	
13	B07500197R	ET PERSONA SCHIACC-PRES MURO	SQUEEZED MAN DECAL	DECAL PERSONNE RCRASE - PRES	AUFKLEBER GEQUETSCHER MANN	
14	B07500781R	ET PERICOLO CARDANO	DANGER PTO SHAFT DECAL	DECAL DANGER CARDAN	ABZIEHBILD GEFAHR GELENKWELLE	
15	B07500194R	ET PERSONA SCHIACC.-BLOCC.	SQUEEZED MAN DECAL	DECAL PERSONNE ECRASE BLOCEG	AUFKLEBE GEQUETSCHTER MANN	
16	B07500210R	ET MANO SCHIACC-ORGANI SCH	DECAL SQUEEZED HAND _ ORGANS	DECAL MAIN ECRASEE	AUFKLEBE GEQUERSCHTE HAND	

TAV_500

1

2

3

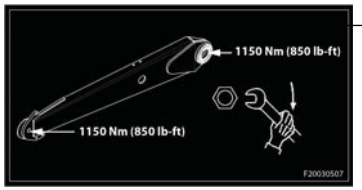

4

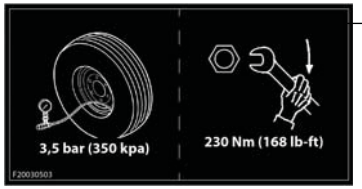

5

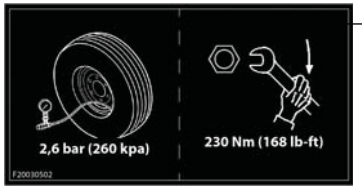

13

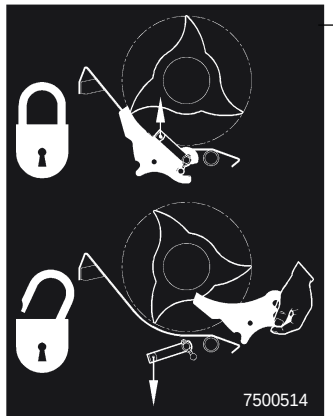

6*

14*

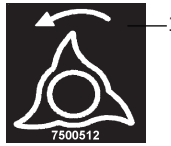

15*

(*) 6; 14; 15 = SOLO modello CUT
ONLY for CUT

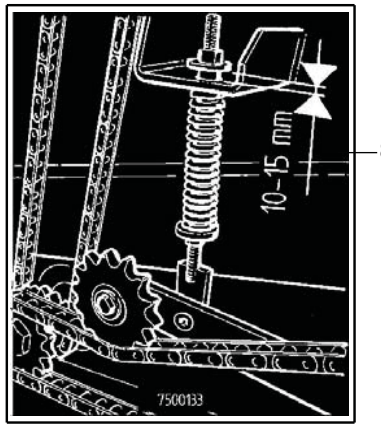

8

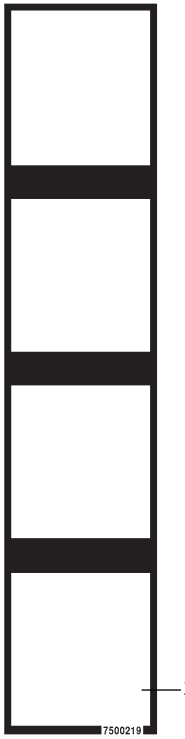

10

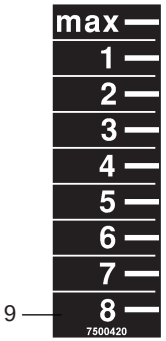

9

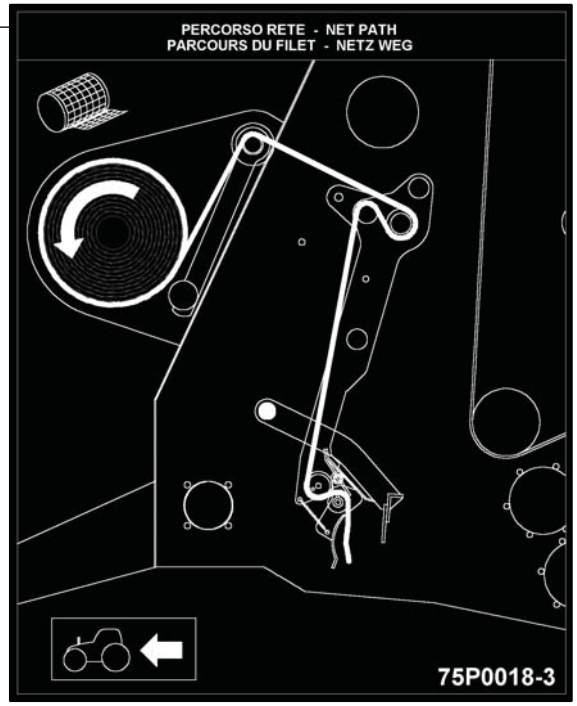

12

7

DECAL "ISTRUZIONE"
DECAL "INSTRUCTION"

TAV_500

Pos.	Cod.	Descrizione	Description	Description	Benennung	Descripcion
1	B07500217R	ET NON USARE GETTI..	DECAL DO NOT USE SPOUTS	DECAL NE PAS USER JETS	AUFKLEBE KEINE STRAHL BENUTZE	
2	B07500214R	ET POMPETTA GRASSO	DECAL GREASE SQUIRT	DECAL PETITE POMPE GRAISSE	AUFKLEBE OELKAENNCHEN	
3	B07500216R	ET GANCIO	DECAL HOOK	DECAL CROC	AUFKLEBE HACKEN	
4	F20030507R	DEC.COPPIA SERR.TIM.SPR TRO DU	DECAL.TIGHTENING TORQUE DRAWB			
5	F20030503R	DECAL PNEUMATICI 3,5 BAR 230NM	DECAL TIRE 3,5 BAR 230NM			
6	B07500514R	ET COLT. BLOCC. SBLOCC.	DECAL KNIVES LOCK. UNBLOCK.	DECAL COUTEAUX BLOC. DEBLOC.	DECAL MESSERN	
7	B07500520R	ET POSIZIONI LEG.FILO	DECAL TYING POSITIONS	DECAL POSITION KIT LIAGE FICE	AUFKLEBER POSITION GARNBINDUN	
8	B07500133R	ET TENDITORE AUTOMATICO	DECAL AUTOMATIC TIGHTNER	AUTOCOLLANT TENDEUR AUTOMATI	AUFKLEBER AUTOMATISCHER SPANN	
9	B07500420R	ET DIMENSIONE BALLA	DECAL BALE DIMENTIONS	DECAL DIMENSION BALLE	AUFKLEBER DIMENSIONE BALLA	
10	B07500219R	ET DIMENSIONE BALLA ANT.	DECLA BALE DIMENSION FRON	DECAL DIMENSION DE A BALLE A	AUFKLEBE BALLENDIMENSION	
12	B075P0018R	ET LEG.RETE CON 2 RULLI	DECAL NET WITH 2 ROLLER	DECAL LIAGE FILET AVEC 2 ROUL	AUFKL. NETZBIND. MIT 2 WALZEN	
13	F20030502R	DECAL PNEUMATICI 2,6BAR 230NM	TIRES LABEL 2,6BAR 230NM			
14	B07500513R	ET ROT. FOLLE	DECAL IDLE ROTOR	DECAL ROTOR FOU	DECAL LEER ROTOR	
15	B07500512R	ET MARCIA ROT.	DECAL ROTOR GEARSHIFT	DECAL ALLURE ROTOR	DECAL ROTOR GANGGETRIEBE	

USATE SEMPRE RICAMBI ORIGINALI
ALWAYS USE ORIGINAL SPARE PARTS
IMMER DIE ORIGINAL-ERSATZTEILE VERWENDEN
***EMPLOYEZ TOUJOURS LES PIECES DE RECHANGE ORI*GINALES**
UTILIZAR SIEMPRE REPUESTOS ORIGINALES

MASCHIO

Servizio Assistenza Tecnica - After Sales Service
Servizio Ricambi - Spare Parts Service

maschio.com

DEALER:

F 0 7 0 2 2 3 4 3

MASCHIO

MASCHIO Fienagione S.p.A.
Sede legale Cremona
Via Bredina, 6 - 26100 Cremona (Italy)
Tel. +39 0372 564610
Fax +39 0372 564625
info@maschio.com

ООО МАСКИО-ГАСПАРДО РУССИЯ
404130, ВОЛЖСКИЙ,
ВОЛГОГРАДСКАЯ обл.,
УЛ. ПУШКИНА, 117 Б., РОССИЯ
TEL. +7 8443 203100
FAX +7 8443 203101
info@maschio.ru

MASCHIO GASPARDO Poland sp z.o.o.
Ul. Wapienna 6/8 - 87 – 100 Torun Poland
Tel. +48 56 6506051
Fax +48 56 6506053
www.gaspardo.pl

MASCHIO FRANCE Sarl
1, Rue de Mérignan ZA
F - 45240 La Ferte St. Aubin
France
Tel. +33 (0) 2.38.64.12.12
Fax +33 (0) 2.38.64.66.79
info@maschio.fr

MASCHIO-GASPARDO ROMANIA S.R.L.
Strada Înfrátirii, F.N.
315100 Chisineu-Cris (Arad) - România
Tel. +40 257 307030
Fax +40 257 307040
info@maschio.ro

MASCHIO GASPARDO NORTH AMERICA, Inc.
112 3rd Avenue East
Dewitt IA 52742 - USA
Tel. +1 563 6596400
Fax +1 563 6596405
info@maschio.us

MASCHIO IBERICA S.L.
MASCHIO DEUTSCHLAND GMBH
MASCHIO-GASPARDO UCRAINA
GASPARDO-MASCHIO TURCHIA
MASCHIO-GASPARDO CINA
MASCHIO-GASPARDO INDIA

Research & Development MASCHIO Fienagione S.p.A.