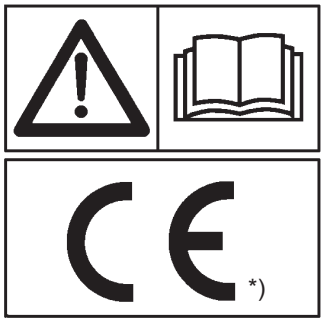

MASCHIO

**MASCHIO Fienagione S.p.A.**

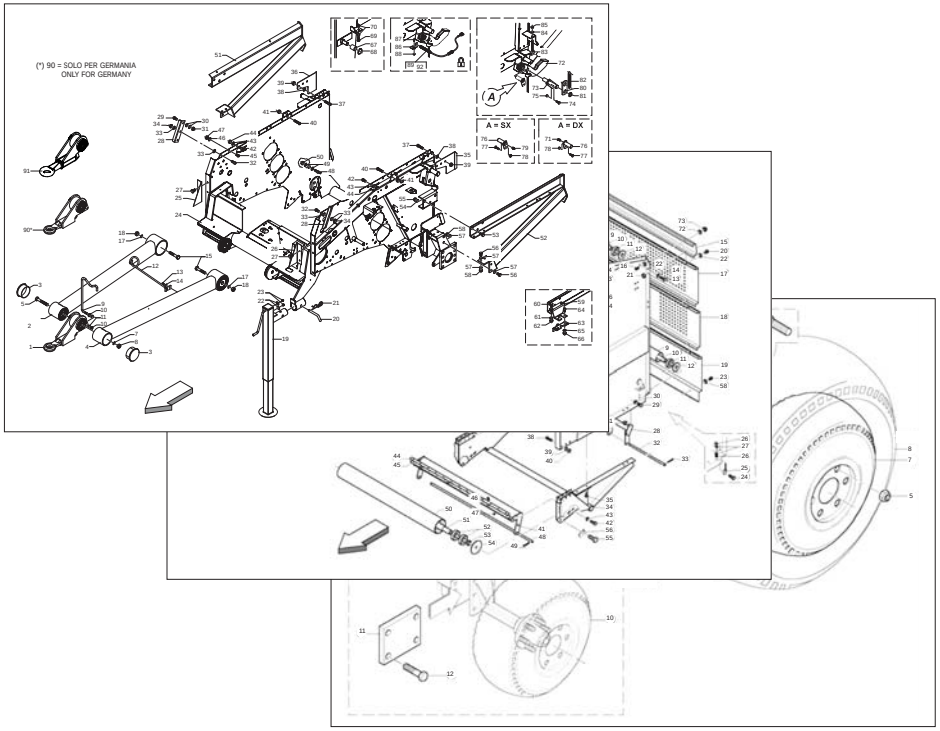


# EXTREME 265

**Cod: F07022223 2017-03**

*) Valido per Paesi UE
*) Valid for EU member countries
*) Valable dans les Pays UE
*) Gilt für EU-Mitgliedsländer
*) Válido para Países UE

**IT PARTI DI RICAMBIO**
**EN *SPARE PARTS***
**DE ERSATZTEILE**
**FR *PIECES DÉTACHÉES***
**ES PIEZAS DE REPUESTO**

ITALIANO

## PARTI DI RICAMBIO

Le ordinazioni delle parti di ricambio vanno fatte presso i nostri concessionari di zona e devono essere sempre corredate dalle seguenti indicazioni:

- **Tipo, modello e numero di matricola dell'attrezzatura.** Tali dati sono stampigliati nell'apposita targhetta di cui è dotata ogni attrezzatura.

- **Numero di codice della parte richiesta** rilevabile dal catalogo ricambi.

- **Descrizione del particolare e quantità richiesta.**

- **Numero della tavola.**

- **Mezzo di trasporto.** Nel caso questa voce non sia specificata, la Ditta Costruttrice, pur dedicando a questo servizio una particolare cura, non risponde di eventuali ritardi di spedizione dovuti a cause di forza maggiore.
Le spese di trasporto si intendono sempre a carico del destinatario. La merce viaggia a rischio e pericolo del committente anche se venduta franco destino.

**NOTA:** Il termine (**Dx**) **Destro** o (**Sx**) **Sinistro** della macchina o di parti di essa, è inteso guardando la macchina dalla parte posteriore. Le eccezioni saranno indicate.

ENGLISH

## *SPARE PARTS*

*Orders must be transmitted through our area dealers and should always include the following indications:*

- ***Type, model and serial number of the machine.*** *These data are punched on the data plate with which every implement is equipped.*

- ***Code number of the required spare part.*** *This will be found in the spare parts catalogue.*

- ***Description of the part and required quantity.***

- ***Table number.***

- ***Means of dispatch.*** *If this item is not indicated, the Manufacturer, while dedicating particular care to this service, shall not be held responsible for delays in delivery caused by cases of force majeure.*
*Transport expenses shall always be at the consignee's charge. The goods travel at the purchaser's risk and peril even when sold ex destination.*

***NOTE:*** *The symbols* ***(Dx) right*** *and* ***(Sx) left****, concerning the machine or single parts of it, are referred, as in the figure, to a rear view of them. Exceptions will be indicated.*

DEUTSCH

## ERSATZTEILE

Die Bestellungen müssen bei unseren Gebietshändrer aufgegeben werden. Bei der Bestellung sind stets die folgenden Angaben zu machen:

- **Typ, Modell und Serien-Nummer des Geräts**. Diese Daten stehen auf dem Typenschild, mit dem jedes Gerät versehen ist.

- **Artikel Nr. der erforderlichen Ersatzteile.** Diese stehen im Ersatzteil-Katalog.

- **Beschreibung des Ersatzteils und die erforderliche Stückzahl.**

- **Tafelnummer.**

- **Versandmittel.** Wenn dieser Punkt nicht spezifiziert wird, haftet die Herstellerfirma nicht für etwaigen Lieferverzug aufgrund höherer Gewalt, auch wenn er diesen Service besonders aufmerksam abwickelt.
Die Frachtkosten gehen dagegen immer zu Lasten des Empfängers. Die Ware reist auf Gefahr und Risiko des Auftraggebers, auch wenn frei Haus Verkauft vereinbart worden ist.

**N.B.:** Die Merkzeichen (**Dx**) **rechts** und (**Sx**) **links** betreffen eine rückwärtige Aussicht der Maschine oder Teile von ihr (siehe Bild). Ausnahmen werden gezeigt.

FRANÇAIS

## *PIECES DÈTACHÈES*

*Les ordres doivent être effectués auprés de nos concessionaires de zone en précisant les indications suivantes:*

- ***Type, modéle et numéro de série de la machine****. Ces données sont gravées sur la plaque d'identification de chaque outil.*

- ***Numéro de code de la piéce détachée*** *indiqué sur le catalogue des piéces détachées.*

- ***Description de la piéce et quantité requise****.*

- ***Numéro de plan****.*

- ***Moyen d'expédition****. Si cette rubrique n'est pas indiquée, le Constructeur, bien que soucieux de ce service, ne répond pas des retards d'expédition pour des causes de force majeure.*
*Les frais de transport sont toujours à la charge du destinataire. La marchandise voyage aux risques et périls de l'acheteur même si vendue franco de port.*

***N.B.:*** *Les références* ***(Dx) droit*** *et* ***(Sx) gauche*** *de la machine ou des parties de la même, est entendue, comme de la figure, en regardant la machine de derriere dans le sens de marche.*

ESPAÑOL

## RESPUESTOS

Los pedidos han de efectuarse en nuestros consesionarios de zona y deben incluir siempre las siguientes indicaciones:

- **Tipo, modelo y número de matrícula del equipo**. Dichos datos están impresos en la relativa placa presente en el equipo.

- **Número de código de la parte requerida** presente en el catálogo respuestos.

- **Descripcíon de la pieza y cantidad requerida**.

- **Numero de illustración**.

- **Medio de transporte**. En caso que este ítem no esté especificado, el Fabricante, aún prestando la debidas consideraciones para este aspecto, no responde por eventuales retardos de env'o debidos a causas de fuerza mayor.
Los gastos de transporte se consideran siempre a cargo del destinatario. La mercandería viaja bajo riesgo y peligro del comprador, incluso cuando se vende franco destino.

**N.B.**: La refencia (**Dx**) **derecha** o (**Sx**) **izquierda** de la máquina o de sus componentes, se entiende, como en la figura, mirando la máquina por la parte trasera. Se indicarán las excepciones.

| N° Tavola | INDICE | Pagina |
|---|---|---|
| TAV_010 | TELAIO INFERIORE + TIMONE + ROLLBAR + GANCI | 7 |
| TAV_015 | TELAIO SUPERIORE | 11 |
| TAV_020 | PORTELLONE | 13 |
| TAV_510 | BLOCCO CINGHIE | 17 |
| TAV_025 | SEGNALATORI DI CARICAMENTO | 19 |
| TAV_030 | RUOTE | 21 |
| TAV_035 | SCATOLA DI TRASMISSIONE | 23 |
| TAV_040 | SCATOLA DI TRASMISSIONE PTO | 25 |
| TAV_045 | ESPLOSO SCATOLA DI TRASMISSIONE | 27 |
| TAV_350 | SCATOLA DI TRASMISSIONE 1000 g/1' | 29 |
| TAV_050 | RULLI | 31 |
| TAV_055 | RULLI CUT | 35 |
| TAV_060 | RULLI "H20" | 39 |
| TAV_065 | RULLI CUT "H20" | 43 |
| TAV_070 | TRASMISSIONE | 47 |
| TAV_075 | BILANCIERE | 51 |
| TAV_080 | INFALDATORE | 53 |
| TAV_085 | ROTOR: TELAIO + ROTORE | 55 |
| TAV_090 | CUT 13: TELAIO + ROTORE | 57 |
| TAV_095 | CUT 25: TELAIO + ROTORE | 61 |
| TAV_100 | CUT 13: TRAVERSA COLTELLI | 65 |
| TAV_105 | CUT 25: TRAVERSA COLTELLI | 67 |
| TAV_110 | SICUREZZA TRASMISSIONE: MECCANICA CON BULLONE | 69 |
| TAV_115 | SICUREZZA TRASMISSIONE: AUTOMATICA "AFC" | 71 |
| TAV_120 | PICK-UP M | 73 |
| TAV_125 | PICK-UP L | 75 |
| TAV_130 | RULLO CONVOGLIATORE (PICK-UP L - PARTE 1) - REV 0 | 77 |
| TAV_131 | RULLO CONVOGLIATORE (PICK-UP L - PARTE 1) - REV 1 | 79 |
| TAV_135 | RULLO CONVOGLIATORE (PICK-UP L - PARTE 2) - REV 0 | 81 |
| TAV_136 | RULLO CONVOGLIATORE (PICK-UP L - PARTE 2) - REV 1 | 83 |
| TAV_140 | PICK-UP M CUT | 85 |
| TAV_145 | PICK-UP L CUT | 87 |
| TAV_150 | RULLO CONVOGLIATORE CUT (PICK-UP M) | 89 |
| TAV_155 | RULLO CONVOGLIATORE CUT (PICK-UP L) | 91 |
| TAV_160 | ASPO PICK-UP M | 93 |
| TAV_165 | ASPO PICK-UP L | 95 |
| TAV_170 | TRASMISSIONE PICK-UP M | 97 |
| TAV_175 | TRASMISSIONE PICK-UP L | 101 |
| TAV_180 | TRASMISSIONE PICK-UP M CUT | 105 |

| *N° Table* | *INDEX* | *Page* |
|---|---|---|
| *TAV_010* | *LOWER FRAME + CROSSBAR + ROLLBAR + HOOKS* | *7* |
| *TAV_015* | *UPPER FRAME* | *11* |
| *TAV_020* | *REAR GATE* | *13* |
| *TAV_510* | *BELTS LOCK* | *17* |
| *TAV_025* | *LOADER INDICATORS* | *19* |
| *TAV_030* | *WHEELS* | *21* |
| *TAV_035* | *GEAR BOX* | *23* |
| *TAV_040* | *PTO GEAR BOX* | *25* |
| *TAV_045* | *GEAR BOX PARTS* | *27* |
| *TAV_350* | *GEAR BOX 1000 rpm* | *29* |
| *TAV_050* | *ROLLERS* | *31* |
| *TAV_055* | *ROLLERS CUT* | *35* |
| *TAV_060* | *ROLLERS "H20"* | *39* |
| *TAV_065* | *ROLLERS CUT "H20"* | *43* |
| *TAV_070* | *TRANSMISSION* | *47* |
| *TAV_075* | *BELT TENSIONER ARM* | *51* |
| *TAV_080* | *FEEDING SYSTEM* | *53* |
| *TAV_085* | *ROTOR: FRAME + ROTOR* | *55* |
| *TAV_090* | *CU 13: FRAME + ROTOR* | *57* |
| *TAV_095* | *CUT 25: FRAME + ROTOR* | *61* |
| *TAV_100* | *CUT 13: KNIVES CROSSBAR* | *65* |
| *TAV_105* | *CUT 25: KNIVES CROSSBAR* | *67* |
| *TAV_110* | *TRASMISSION SAFETY DEVICE: MECHANICAL WITH BOLT* | *69* |
| *TAV_115* | *TRANSMISSIONE SAFETY DEVICE: AUTOMATIC "AFC"* | *71* |
| *TAV_120* | *PICK-UP M* | *73* |
| *TAV_125* | *PICK-UP L* | *75* |
| *TAV_130* | *ROLLER CONVEYOR (PICK-UP L - PART 1) - REV 0* | *77* |
| *TAV_131* | *ROLLER CONVEYOR (PICK-UP L - PART 1) - REV 1* | *79* |
| *TAV_135* | *ROLLER CONVEYOR (PICK-UP L - PART 2) - REV 0* | *81* |
| *TAV_136* | *ROLLER CONVEYOR (PICK-UP L - PART 2) - REV 1* | *83* |
| *TAV_140* | *PICK-UP M CUT* | *85* |
| *TAV_145* | *PICK-UP L CUT* | *87* |
| *TAV_150* | *ROLLER CONVEYOR CUT (PICK-UP M)* | *89* |
| *TAV_155* | *ROLLER CONVEYOR CUT (PICK-UP L)* | *91* |
| *TAV_160* | *PICK-UP M SHAFT* | *93* |
| *TAV_165* | *PICK-UP L SHAFT* | *95* |
| *TAV_170* | *PICK-UP M TRANSMISSION* | *97* |
| *TAV_175* | *PICK-UP L TRANSMISSION* | *101* |
| *TAV_180* | *PICK-UP M CUT TRANSMISSION* | *105* |

| N° Tavola | INDICE | Pagina |
|---|---|---|
| TAV_185 | TRASMISSIONE PICK-UP L CUT | 109 |
| TAV_190 | IMPIANTO IDRAULICO PICK-UP | 113 |
| TAV_195 | IMPIANTO IDRAULICO PICK-UP CUT | 115 |
| TAV_200 | RUOTE PICK-UP M | 117 |
| TAV_205 | RUOTE PICK-UP L | 119 |
| TAV_210 | IMPIANTO IDRAULICO MACCHINA | 121 |
| TAV_215 | VALVOLA GEOMETRIA-PRESSIONE (ELETTRONICA E MECCANICA) | 123 |
| TAV_220 | CABLAGGIO | 125 |
| TAV_225 | LEGATORE FILO | 127 |
| TAV_230 | LEGATOER FILO: CASSONETTO | 131 |
| TAV_235 | CARTER ANTERIORE (SOLO CON LEGATORE FILO) | 133 |
| TAV_240 | LEGATORE RETE (PARTE 1) | 135 |
| TAV_245 | LEGATORE RETE (PARTE 2) | 137 |
| TAV_250 | LEGATORE RETE (PARTE 3) | 139 |
| TAV_255 | LEGATORE RETE (PARTE 4) | 141 |
| TAV_260 | LEGATORE RETE (PARTE 5) | 143 |
| TAV_265 | IMPIANTO OLIATURA AUTOMATICA | 147 |
| TAV_270 | IMPIANTO OLIATURA AUTOMATICA CUT | 149 |
| TAV_275 | CARTER ANTERIORI | 153 |
| TAV_280 | CARTER LATERALI | 155 |
| TAV_285 | IMPIANTO LUCI + CUNEI | 159 |
| TAV_290 | ESPULSORE | 161 |
| TAV_295 | GRAFFATURA | 163 |
| TAV_300 | KIT CASSONETTO SUPPLEMENTARE PER BOBINE FILO | 165 |
| TAV_305 | KIT STAFFE SUPPLEMENTARI PER ROTOLO RETE | 167 |
| TAV_310 | KIT FILM PLASTICO | 169 |
| TAV_355 | KIT LAMPEGGIANTE + ECCEZIONALE | 171 |
| TAV_315 | DISPOSITIVO DI STAZIONAMENT MECCANICO | 173 |
| TAV_320 | DISPOSITIVO STAZIONAMENTO IDRAULCO (CUT) | 175 |
| TAV_325 | FRENO IDRAULICO (NO OMOLOGAZIONE ITALIA) | 177 |
| TAV_360 | ESPLOSO MOZZO CON FRENO | 179 |
| TAV_330 | DECAL "LOGO" | 181 |
| TAV_345 | DECAL "LOGO" GIAPPONE | 183 |
| TAV_335 | DECAL "CE" | 185 |
| TAV_340 | DECAL "INSTRUZIONE" | 187 |

| *N° Table* | *INDEX* | *Page* |
|---|---|---|
| *TAV_185* | *PICK-UP L CUT TRANSMISSION* | *109* |
| *TAV_190* | *PICK-UP HYDRAULIC SYSTEM* | *113* |
| *TAV_195* | *PICK-UP CUT HYDRAULIC TRANSMISSION* | *115* |
| *TAV_200* | *PICK-UP M WHEELS* | *117* |
| *TAV_205* | *PICK-UP L WHEELS* | *119* |
| *TAV_210* | *MACHINE HYDRAULIC SYSTEM* | *121* |
| *TAV_215* | *GEOMETRY-PRESSURE VALVE (ELECTRONIC AND MECHANICAL)* | *123* |
| *TAV_220* | *CONTROL SYSTEM* | *125* |
| *TAV_225* | *TWINE BINDER* | *127* |
| *TAV_230* | *TWINE BINDER: TWINE BOX* | *131* |
| *TAV_235* | *FRONT CARTER (ONLY WITH TWINE BINDER)* | *133* |
| *TAV_240* | *NET BINDER (PART 1)* | *135* |
| *TAV_245* | *NET BINDER (PART 2)* | *137* |
| *TAV_250* | *NETE BINDER (PART 3)* | *139* |
| *TAV_255* | *NET BINDER (PART 4)* | *141* |
| *TAV_260* | *NET BINDER (PART 5)* | *143* |
| *TAV_265* | *AUTOMATIC OILING SYSTEM* | *147* |
| *TAV_270* | *AUTOMATIC OILING CUT SYSTEM* | *149* |
| *TAV_275* | *FRONT CARTER* | *153* |
| *TAV_280* | *SIDE CARTER* | *155* |
| *TAV_285* | *LIGHTS PLANT + CHOCKS* | *159* |
| *TAV_290* | *EJECTOR* | *161* |
| *TAV_295* | *STAPLING DEVICE* | *163* |
| *TAV_300* | *ADDITIONAL TWINE BOX KIT* | *165* |
| *TAV_305* | *ADDITIONAL NET SUPPORT KIT* | *167* |
| *TAV_310* | *PLASTIC FILM KIT* | *169* |
| *TAV_355* | *FLASHING + EXCEPTIONAL KIT* | *171* |
| *TAV_315* | *MECHANICAL PARKING DEVICE* | *173* |
| *TAV_320* | *HYDRAULIC PARKING DEVICE (CUT)* | *175* |
| *TAV_325* | *HYDRAULIC BRAKE (NO ITALY APPROVAL)* | *177* |
| *TAV_360* | *HUB WITH BRAKE PARTS* | *179* |
| *TAV_330* | *DECAL "LOGO"* | *181* |
| *TAV_345* | *DECAL "LOGO" JAPAN* | *183* |
| *TAV_335* | *DECAL "CE"* | *185* |
| *TAV_340* | *DECAL "INSTRUCTION"* | *187* |

# TAV_010

(*) 90 = SOLO PER GERMANIA
ONLY FOR GERMANY

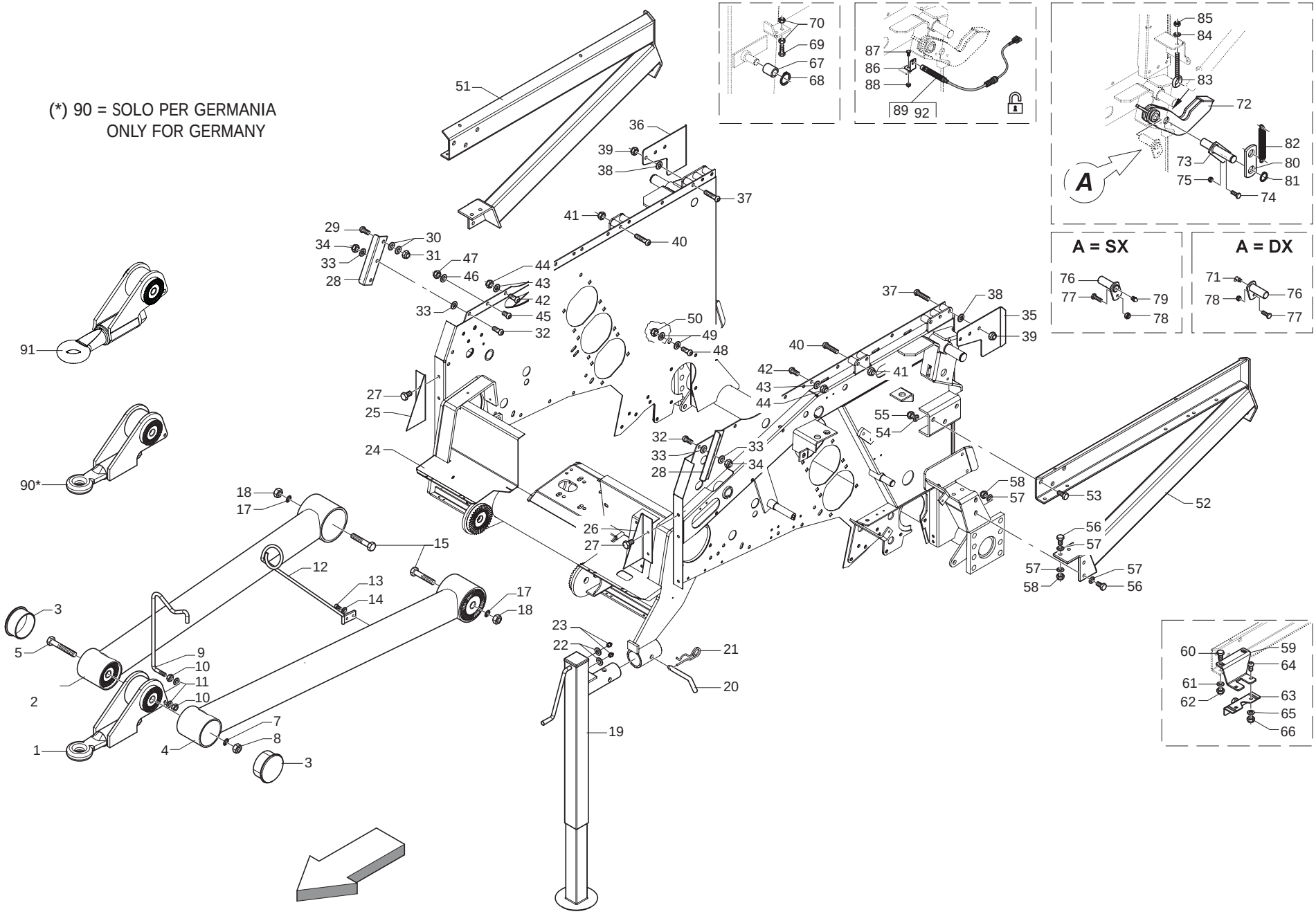




MASCHIO

cod. F07022223

# TELAIO INFERIORE + TIMONE + ROLLBAR + GANCI
## *LOWER FRAME + CROSSBAR + ROLLBAR + HOOKS*

TAV_010

| Pos. | Cod. | Descrizione | Description | Description | Benennung | Descripcion |
|---|---|---|---|---|---|---|
| 1 | B07S01750 | TRAINO 35 | TOWING EYE 35 | EQUIPEMENT DE TIRAGE DIAM. 35 | ZUGOESE 35 | |
| 2 | B07SP1101G | ALA DX TIMONE | RIGHT PART OF DRAWBAR | | | |
| 3 | B07V00099 | TAPPO PER OCCHIONE | PLUG FOR TOWING EYE | BOUCHON POUR OEIL DE TRACTION | ZUGOESENSCHLIESSPFROPFEN | |
| 4 | B07SP1102G | ALA SX TIMONE | LEFT PART OF DRAWBAR | | | |
| 5 | F01020628 | VITE M24X3X180 U5737 10.9ZB | SCR. M24X3X180 U5737 10.9ZB | VIS M24X3X180 5739 10.9 ZN | SCHRAUBE M24X3X180 5739 10.9 Z | TORNILLO M24X3X180 5739 10.9 Z |
| 7 | F01480261 | RONDELLA D24 UNI 1751 ZN | WASHER D24 U1751 ZN | | | |
| 8 | B00740724 | DADO M24X 2 D982 8 ZN | NUT | ECROU | MUTTER M24-8G | |
| 9 | B0C005121 | SOSTEGNO CARDANO | CARDAN SHAFT SUPPORT | SUPPORT CARDAN | KARDANWELLENHALTER | |
| 10 | B00920412 | DADO M12X1,75 D985 8 ZN | NUT | ECROU | SELBSTSICHERNDE MUTTER M12-5S | |
| 11 | F01410076 | ROS.M12 13X 20X2,0 U1749 ZN | WASHER | RONDELLE | SCHEIBE | |
| 12 | B07S01825 | SOSTEGNO TUBAZIONI | HOSE SUPPORT | SUPPORT TUYAUTERIES | SCHLAUCHHALTERUNG | |
| 13 | B00471025 | VITE TTEI M10X 25-8.8 UNBRA | SCREW | VIS | SCHRAUBE TTEI M10X 25-8.8 | |
| 14 | F01410062 | ROS.M10 10,5X 18X 2 U6592 ZN | WASHER M10 10,5X 18X 2 U6592 | RONDELLE M10 10,5X18X2 ZN | DICHTUNGSRING M10 10,5X18X2 ZN | RONDANA M10 10,5X18X2 ZN |
| 15 | F01020343 | VITE M24X3X80 U5737 10.9ZD | SCR. M24X3X80 U5737 10.9ZD | VIS M24X3X80 U5737 10.9 ZN | SCHRA. M24X3X80 U5737 10.9 ZN | TORN. M24X3X80 U5737 10.9 ZN |
| 17 | F01480261 | RONDELLA D24 UNI 1751 ZN | WASHER D24 U1751 ZN | | | |
| 18 | B00740724 | DADO M24X 2 D982 8 ZN | NUT | ECROU | MUTTER M24-8G | |
| 19 | B07S01755 | SERVOTIMONE | DRAW BAR STAND | SERVO BARRE DE TIRAGE | STUETZFUSS | |
| 20 | B013C0001 | SPINA 16X158 CON PIEGA | PIN | GOUPILLE | STIFT | |
| 21 | B011B0499 | SPINA A MOLLA A DOPPIO GIRO 4 | PIN | GOUPILLE CLIPS | ZAPFEN | |
| 22 | F01410051 | ROS.M8 8,4X 17X1,6 U6592 ZN | WASHER M8 8,4X17X1,6 U6592 ZN | RONDELLE | SCHEIBE | |
| 23 | B04200810 | INGRAS HYDR M 8X1 DRITTO | GREASE | GRAISSEUR HYDRAULIQUE | GERADER SCHMIERNIPPEL M8X1 | |
| 24 | B07SP1005 | TELAIO INFERIORE 220-265-280 | LOWER FRAME 220-265-280 | CHASSIS INFERIEUR 220-265-280 | 220 265 280 UNTERER RAHMEN | |
| 25 | B0C005036 | CHIUSURA ANT. DX | RIGHT FRONT LOCK | FERMETURE ANTERIEURE DROITE | RECHTER VORDERER VERSCHLUSS | |
| 26 | B0C005035 | CHIUSURA ANT. SX | LEFT FRONT LOCK | FERMETURE ANTERIEURE GAUCHE | LINKER VORDERER VERSCHLUSS | |
| 27 | F01020436 | VITE M8X1,25X20 U5739 8.8ZN | SCR. M8X1,25X20 U5739 8.8ZN | VIS M8X1,25X 20 U5739 8.8 ZN | SCHRAUBE M8X1,25X20U5739 8.8ZN | TORN. M8X1,25X20 U5739 8.8 ZN |
| 28 | B0C005026 | RINFORZO TELAI | FRAME STIFFENING | | | |
| 29 | B00471230 | VITE TTEI M12X 30-8.8 UNBRA | SCREW | VIS | SCHRAUBE TTEI M12X 30-8.8 | |
| 30 | F01410076 | ROS.M12 13X 20X2,0 U1749 ZN | WASHER | RONDELLE | SCHEIBE | |
| 31 | B00920412 | DADO M12X1,75 D985 8 ZN | NUT | ECROU | SELBSTSICHERNDE MUTTER M12-5S | |
| 32 | B00471230 | VITE TTEI M12X 30-8.8 UNBRA | SCREW | VIS | SCHRAUBE TTEI M12X 30-8.8 | |
| 33 | F01410076 | ROS.M12 13X 20X2,0 U1749 ZN | WASHER | RONDELLE | SCHEIBE | |
| 34 | B00920412 | DADO M12X1,75 D985 8 ZN | NUT | ECROU | SELBSTSICHERNDE MUTTER M12-5S | |
| 35 | B0C004488 | RIPARO GANCIO SX | SHELTER HOOK LEFT | | | |
| 36 | B0C004506 | RIPARO GANCIO DX | RIGHT HOOK GUARD | PROTECTION CROCHET DROIT | RECHTER HAKENSCHUTZ | |
| 37 | B00471280 | VITE TTEI M12X 80-10.9 UNBRAKO | SCREW | VIS | SCHRAUBE TTEI M12X 80-8.8 | |
| 38 | F01410076 | ROS.M12 13X 20X2,0 U1749 ZN | WASHER | RONDELLE | SCHEIBE | |
| 39 | B00920412 | DADO M12X1,75 D985 8 ZN | NUT | ECROU | SELBSTSICHERNDE MUTTER M12-5S | |
| 40 | B00471280 | VITE TTEI M12X 80-10.9 UNBRAKO | SCREW | VIS | SCHRAUBE TTEI M12X 80-8.8 | |
| 41 | B00920412 | DADO M12X1,75 D985 8 ZN | NUT | ECROU | SELBSTSICHERNDE MUTTER M12-5S | |
| 42 | B00471225 | VITE TTEI M12X 25-8.8 UNBRA | SCREW | VIS | SCHRAUBE TTEI M12X 25-8.8 | |
| 43 | F01410076 | ROS.M12 13X 20X2,0 U1749 ZN | WASHER | RONDELLE | SCHEIBE | |
| 44 | B00920412 | DADO M12X1,75 D985 8 ZN | NUT | ECROU | SELBSTSICHERNDE MUTTER M12-5S | |
| 45 | B00471220 | VITE TTEI M12X 20-8.8 UNBRA | SCREW | VIS | SCHRAUBE TTEI M12X 20-8.8 | |
| 46 | F01410076 | ROS.M12 13X 20X2,0 U1749 ZN | WASHER | RONDELLE | SCHEIBE | |
| 47 | B00920412 | DADO M12X1,75 D985 8 ZN | NUT | ECROU | SELBSTSICHERNDE MUTTER M12-5S | |
| 48 | B00471225 | VITE TTEI M12X 25-8.8 UNBRA | SCREW | VIS | SCHRAUBE TTEI M12X 25-8.8 | |
| 49 | F01420120 | ROS.M12 13X 36X2,5 U6593 ZN | WASHER | RONDELLE | SCHEIBE | |
| 50 | B00920412 | DADO M12X1,75 D985 8 ZN | NUT | ECROU | SELBSTSICHERNDE MUTTER M12-5S | |
| 51 | B07S01663 | TELAIO ROLL DX 265-280 | RIGHT ROLL FRAME | CHASSIS ROLL DROIT 265-280 | RECHTER ROLL RAHMEN | |
| 52 | B07S01550 | TELAIO ROLL SX 265-280 | LEFT ROLL FRAME | CHASSIS ROLL GAUCHE 265 280 | LINKER ROLL RAHMEN | |
| 53 | F01020564 | VITE M16X2X35 U5739 8.8ZN | SCR. M16X2X35 U5739 8.8ZN | VIS M 16X35 | SCHRAUBE M 16X35 | TORNILLO M 16X35 |
| 54 | F01410100 | ROS.M16 17X 30X 3 U6592 ZN | WASHER | RONDELLE | SCHEIBE | |
| 55 | B00920516 | DADO M16X 1,5 D985 6S ZN | NUT M16X1,5 D985 6S ZN | ECROU | SELBSTSICHERNDE MUTTER M16-5S | |
| 56 | F01020514 | VITE M12X1,75X40 U5739 8.8ZN | SCR. M12X1,75X40 U5739 8.8ZN | VIS M12X1,75X40 U5739 8.8ZN | SCHRA. M12X1,75X40 U5739 8.8ZN | TORN. M12X1,75X40 U5739 8,8ZN |
| 57 | F01410076 | ROS.M12 13X 20X2,0 U1749 ZN | WASHER | RONDELLE | SCHEIBE | |
| 58 | B00920412 | DADO M12X1,75 D985 8 ZN | NUT | ECROU | SELBSTSICHERNDE MUTTER M12-5S | |
| 59 | B0C005184 | ATTACCO CHIUSURA | CLOSURE COUPLING | ATTELAGE FERMETURE | VERSCHLUSSANSCHLUSS | |

# TAV_010

(*) 90 = SOLO PER GERMANIA
ONLY FOR GERMANY

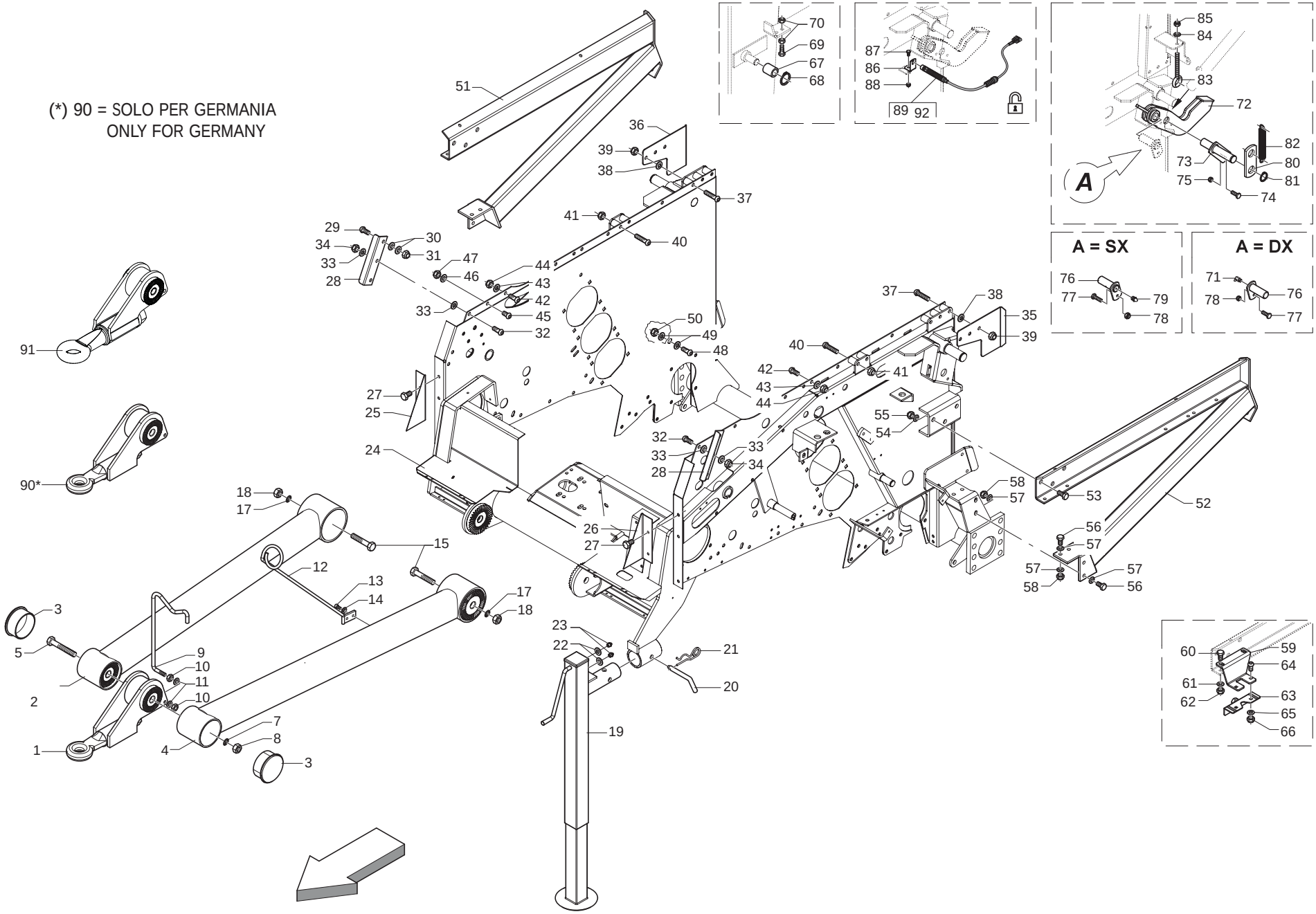




MASCHIO

cod. F07022223

# TELAIO INFERIORE + TIMONE + ROLLBAR + GANCI
## *LOWER FRAME + CROSSBAR + ROLLBAR + HOOKS*

TAV_010

| Pos. | Cod. | Descrizione | Description | Description | Benennung | Descripcion |
|---|---|---|---|---|---|---|
| 60 | F01020479 | VITE M10X1,5X35 U5739 8.8ZN | SCR. M10X1,5X35 U5739 8.8ZN | VIS M10X1,5X35 U5739 8.8 ZN | SCHR. M10X1,5X35 U5739 8.8 ZN | TORN. M10X1,5X35 U5739 8.8 ZN |
| 61 | F01410062 | ROS.M10 10,5X 18X 2 U6592 ZN | WASHER M10 10,5X 18X 2 U6592 | RONDELLE M10 10,5X18X2 ZN | DICHTUNGSRING M10 10,5X18X2 ZN | RONDANA M10 10,5X18X2 ZN |
| 62 | F01230202 | DADO M10X1,25 D985 8 ZN | SELF-LOCKING NUT | ECROU NYLSTOP | SELBSTSICHERNDE MUTTER M10-5S | |
| 63 | B01800041 | CHIUS.SCHWARZ RIF.SV 941104-00 | LOCK | FERMETURE | VERSCHLUSS SCHWARZ REF. SV. 9 | |
| 64 | B00470820 | VITE TTEI M 8X 20-10,9 UMBRAKO | SCREW | VIS | SCHRAUBE TTEI M 8X 20-10.9 | |
| 65 | F01410051 | ROS.M8 8,4X 17X1,6 U6592 ZN | WASHER M8 8,4X17X1,6 U6592 ZN | RONDELLE | SCHEIBE | |
| 66 | B00920208 | DADO M8X1 D985 8ZN | NUT M8X1 D985 8ZN | ECROU | SELBSTSICHERNDE MUTTER M8-5S | |
| 67 | B01300612 | DISTANZIALE 30,5X42X45 | SPACER | ENTRETOISE | DISTANZSTUECK 30,5X42X45 | |
| 68 | F02050112 | ANEL. D ARR. ALB. 30-E UNI3653 | SEEGER RING | BAGUE SEEGER | SEEGERRING 30-E | |
| 69 | F01020519 | VITE M12X1,75X 60 U5739 8.8ZN | SCREW M12X1,75X 60 U5739 8.8ZN | | | |
| 70 | F01200293 | DADO M12X1,75 U5588 CL8 ZN | NUT M12X1,75 U5588 6S ZN | ECROU M12X1,75 U5588 6S ZN | MUTTER M12X1,75 U5588 6S ZN | TUERCA M12X1,75 U5588 6S ZN |
| 71 | F01100013 | INGRAS HYDR M 6X1 90 | GREASE NIPPLE | GRAISSEUR HYDRAULIQUE | SCHMIERNIPPEL M6X1 90 | |
| 72 | B07S01772 | GANCIO PORTELLONE | REAR GATE HOOK | CROCHET PORTE ARRIERE | HECKKLAPPENHAKEN | |
| 73 | B07S01757 | SPINA MARTINETTO PORTELLONE | REAR GATE CYLINDER PIN | GOUPILLE VERIN PORTE ARRIERE | HECKKLAPPENZYLINDERBOLZEN | |
| 74 | F01020440 | VITE M8X1,25X25 U5739 8.8ZN | SCR. M8X1,25X25 U5739 8.8ZN | VIS M8X1,25X25 U5739 8.8 ZN | SCHRAUBE M8X1,25X25U5739 8.8ZN | TORNIL.M8X1,25X25 U5739 8.8 ZN |
| 75 | B00920208 | DADO M8X1 D985 8ZN | NUT M8X1 D985 8ZN | ECROU | SELBSTSICHERNDE MUTTER M8-5S | |
| 76 | B07S00937 | SPINA GANCIO PORTELLONE | TAILGATE HOOK PIN | AXE ACCROCHAGE PORTE POST. | HECKKLAPPENHAKENBOLZEN | |
| 77 | F01020440 | VITE M8X1,25X25 U5739 8.8ZN | SCR. M8X1,25X25 U5739 8.8ZN | VIS M8X1,25X25 U5739 8.8 ZN | SCHRAUBE M8X1,25X25U5739 8.8ZN | TORNIL.M8X1,25X25 U5739 8.8 ZN |
| 78 | B00920208 | DADO M8X1 D985 8ZN | NUT M8X1 D985 8ZN | ECROU | SELBSTSICHERNDE MUTTER M8-5S | |
| 79 | B04200610 | INGRASS.A SFERE M6X1 LUNGO | GREASE NIPPLE | GRAISSEUR HYDRAULIQUE | GERADER SCHMIERNIPPEL M6X1 | |
| 80 | BC004902L | RINFORZO | STIFFENING | | | |
| 81 | B01700020 | ANEL. D ARR. ALB. 20-E UNI3653 | SEEGER RING | BAGUE SEEGER | SEEGERRING 20-E | |
| 82 | B01826161 | MOLLA CONTRASTO RULLO | SPRING | RESSORT | FEDER | |
| 83 | B00545168 | OCCHIOLO PER TENDITORI M12-DX | EYELET M12 | OEIL M12 | OSE M12 | |
| 84 | F01410076 | ROS.M12 13X 20X2,0 U1749 ZN | WASHER | RONDELLE | SCHEIBE | |
| 85 | B00920412 | DADO M12X1,75 D985 8 ZN | NUT | ECROU | SELBSTSICHERNDE MUTTER M12-5S | |
| 86 | B0C004245 | SOSTEGNO | SUPPORT | SUPPORT | HALTER | |
| 87 | F01020470 | VITE M10X1,5X20 U5739 8.8ZN | SCR. M10X1,5X20 U5739 8.8ZN | VIS M10X1,5X20 U5739 8.8 ZN | SCHRAUBE M10X1,5X20 U5739 ZN | TORNILLOM10X1,5X20 U5739 8.8Z |
| 88 | F01230202 | DADO M10X1,25 D985 8 ZN | SELF-LOCKING NUT | ECROU NYLSTOP | SELBSTSICHERNDE MUTTER M10-5S | |
| 89 | B0E0P0016 | SENSORE GANCIO DX F_BUS | SENSOR | SENSEUR | SENSOR HACKEN RECHTS | |
| 90 | B07SP0974G | OCCHIONE FISSO D=40 MM CON BOC | FIXED TOWING EYE 40 WITH BUSH | | | |
| 91 | B07S01789 | TRAINO 50 | TOWING EYE 50 | TIRAGE | ZUG 50 | |
| 92 | B0E0P0017 | SENSORE GANCIO SX F_BUS | SENSOR | SENSEUR | SENSOR HACKEN LINKS | |

TAV_015

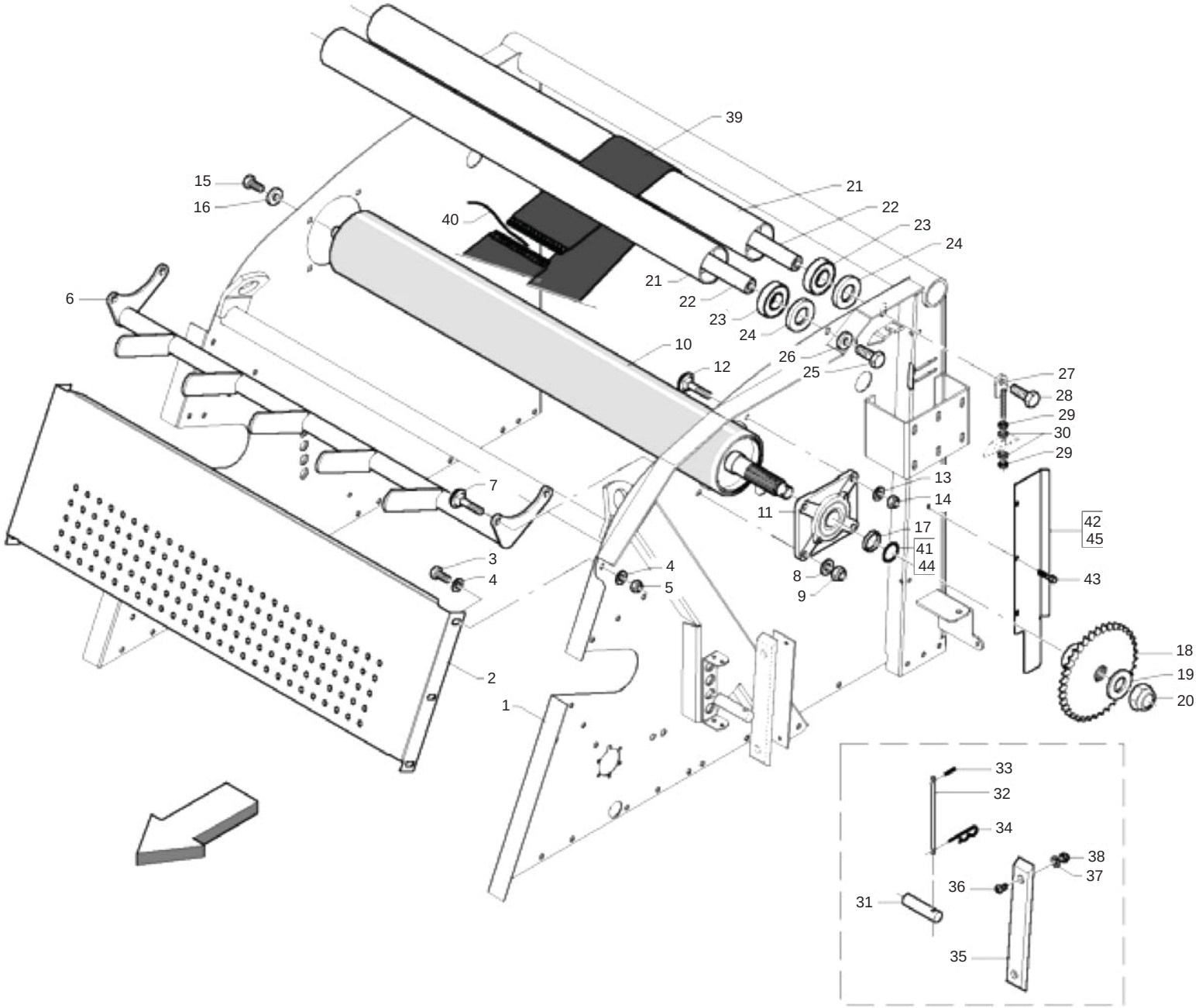




MASCHIO

cod. F07022223

# TELAIO SUPERIORE
## *UPPER FRAME*

TAV_015

| Pos. | Cod. | Descrizione | Description | Description | Benennung | Descripcion |
|---|---|---|---|---|---|---|
| 1 | B07S01626 | TELAIO SUPERIORE 265 | UPPER FRAME 265 | CHASSIS SUPERIEUR 265 | OBERER RAHMEN 265 | |
| 2 | B0C100015 | COLLEGAMENTO ANT.265-280 | FRONT CONNECTION | CONNEXION ANTERIEURE 265-280 | VORDERE KUPPLUNG | |
| 3 | F01020510 | VITE M12X1,75X30 U5739 8.8ZN | SCR. M12X1,75X30 U5739 8.8ZN | VIS M12X1,75X30 U5739 8.8ZN | SCHRAU.M12X1,75X30 U5739 8.8ZN | TORN. M12X1,75X30 U5739 8.8ZN |
| 4 | F01410076 | ROS.M12 13X 20X2,0 U1749 ZN | WASHER | RONDELLE | SCHEIBE | |
| 5 | B00920412 | DADO M12X1,75 D985 8 ZN | NUT | ECROU | SELBSTSICHERNDE MUTTER M12-5S | |
| 6 | B07S00941 | GUIDACINGHIE ANT. | FRONT BELT GUIDE | GUIDE-COURROIES ANTERIEUR | VORDERE GURTENFUEHRUNG | |
| 7 | B00523395 | VITE SPECIALE TTQST M12X45-8.8 | SPECIAL SCREW | VIS SPECIALE | SCHRAUBE TTQST M12X 45-8.8 | |
| 8 | F01410076 | ROS.M12 13X 20X2,0 U1749 ZN | WASHER | RONDELLE | SCHEIBE | |
| 9 | B00920412 | DADO M12X1,75 D985 8 ZN | NUT | ECROU | SELBSTSICHERNDE MUTTER M12-5S | |
| 10 | B03500234 | RULLO GOMMATO 3500217 | RUBBER ROLLER | ROULEAU CAOUTCHOUTE | GUMMIWALZE | |
| 11 | B02700051 | SUPPORTO FLANGIATO | FLANGED SUPPORT | SUPPORT EMBOUTI | FLANSCHLAGER | |
| 12 | B00523421 | VITE SPECIALE TTQST M12X35-8.8 | SPECIAL SCREW | VIS SPCIALE | SCHRAUBE TTQST M12X 35-8.8 | |
| 13 | F01410076 | ROS.M12 13X 20X2,0 U1749 ZN | WASHER | RONDELLE | SCHEIBE | |
| 14 | B00920412 | DADO M12X1,75 D985 8 ZN | NUT | ECROU | SELBSTSICHERNDE MUTTER M12-5S | |
| 15 | F01020564 | VITE M16X2X35 U5739 8.8ZN | SCR. M16X2X35 U5739 8.8ZN | VIS M 16X35 | SCHRAUBE M 16X35 | TORNILLO M 16X35 |
| 16 | B01515091 | RALLA 17 52 6 | FIFTH WHEEL | BUTEE | SCHEIBE | |
| 17 | B01300845 | DISTANZIALE 40X50X4 | SPACER | ENTRETOISE | DISTANZSCHEIBE 40X50X4 | |
| 18 | B03400288 | INGR.RULLO GOMMATO Z=25-1 | ROLLER WITH TYRES GEAR Z=25-1 | ENGRANAGE | ZAHNRAD Z=25-1 | |
| 19 | B014R3050 | ROSETTA 30 UNI 5714-69 E DEIDR | WASHER | RONDELLE | BEILAGSSCHEIBE | |
| 20 | F01230291 | DADO M30X 2 D985 ZN | NUT | ECROU | SELBSTSICHERNDE MUTTER M30X2-5 | |
| 21 | B03500172 | RULLO FOLLE | IDLE ROLLER | ROULEAU FOU | UMLENKWALZE | |
| 22 | B03500214 | ALBERO LUNGO | LONG SHAFT | ARBRE LONG | LANGE WELLE | |
| 23 | B02040002 | CUSCINETTO 6307-2RS CAT.KST004 | BEARING | ROULEMENT | LAGER 6307-2RS | |
| 24 | B01300623 | CHIUSURA RULLI FOLLI | IDLE ROLLER LOCK | FERMETURE ROULEAUX FOUX | UMLENKWALZENVERSCHLUSS | |
| 25 | F01020564 | VITE M16X2X35 U5739 8.8ZN | SCR. M16X2X35 U5739 8.8ZN | VIS M 16X35 | SCHRAUBE M 16X35 | TORNILLO M 16X35 |
| 26 | B01519319 | RALLA 16X38X5 | FIFTH WHEEL | BUTEE | SCREIBE | |
| 27 | B07S01608 | REGOLATORE RULLO | ROLLER ADJUSTER | REGLEUR ROULEAU | WALZENEINSTELLER | |
| 28 | F01020564 | VITE M16X2X35 U5739 8.8ZN | SCR. M16X2X35 U5739 8.8ZN | VIS M 16X35 | SCHRAUBE M 16X35 | TORNILLO M 16X35 |
| 29 | F01200293 | DADO M12X1,75 U5588 CL8 ZN | NUT M12X1,75 U5588 6S ZN | ECROU M12X1,75 U5588 6S ZN | MUTTER M12X1,75 U5588 6S ZN | TUERCA M12X1,75 U5588 6S ZN |
| 30 | F01410076 | ROS.M12 13X 20X2,0 U1749 ZN | WASHER | RONDELLE | SCHEIBE | |
| 31 | B01300647 | SPINA DI REGOLAZIONE | ADJUSTMENT PIN | AXE DE REGLAGE | AUSRICHTEPASSSTIFT | |
| 32 | B01300646 | SPINA DI FERMO | LOCK PIN | AXE D ARRET | ARRETIERSTIFT | |
| 33 | B01110325 | SPINA ELAST. 3X 25 SS DIN 1481 | PIN | GOUPILLE | STIFT | |
| 34 | B01172574 | SPINA MOLLA 2,5 OCCH.SEMPL. | PIN | GOUPILLE CLIPS | STIFT | |
| 35 | B07631842 | GUIDA CATENA | CHAIN GUIDE | GUIDE | KETTENFUEHRUNG | |
| 36 | B00470820 | VITE TTEI M 8X 20-10,9 UMBRAKO | SCREW | VIS | SCHRAUBE TTEI M 8X 20-10.9 | |
| 37 | F01410051 | ROS.M8 8,4X 17X1,6 U6592 ZN | WASHER M8 8,4X17X1,6 U6592 ZN | RONDELLE | SCHEIBE | |
| 38 | B00920208 | DADO M8X1 D985 8ZN | NUT M8X1 D985 8ZN | ECROU | SELBSTSICHERNDE MUTTER M8-5S | |
| 39 | B07600072 | CINGHIA PER EXT 265 EXT 165 | BELT 165 | COURROIE 165 | GURT 165 | |
| 40 | B09962005 | CAVETTO GIUNZIONE MT.1 | WIRE 2,5 PLAST.L.1MT | CABLE | KABEL 49 SCHNUREN | |
| 41 | B01300126 | SPES. 40 48 1 ZINC.ST_013 | SHIM | ENTRETOISE | DISTANZSTUECK 40 408 1 | |
| 42 | B0C3P0038 | RIPARO SX PORTELLONE | DOOR GUARD LEFT SIDE | PROTECTION PORTE COTE GAUCHE | TUERSCHUTZ LINKS | |
| 43 | B00370615 | VITE M 6X16 ZN SEZ.TRIL. U8111 | SCREW | VIS | SCHRAUBE | |
| 44 | B01300125 | SPES. 40 48 0,5 ZINCATO | SHIM GALV | ENTRETOISE GALV | DISTANZSTUECK 40 48 0,5 | |
| 45 | B0C3P0039 | RIPARO DX PORTELLONE | DOOR GUARD RIGHT SIDE | PROTECTION PORTE COTE DROIT | TUERSCHUTZ RECHTS | |

# TAV_020

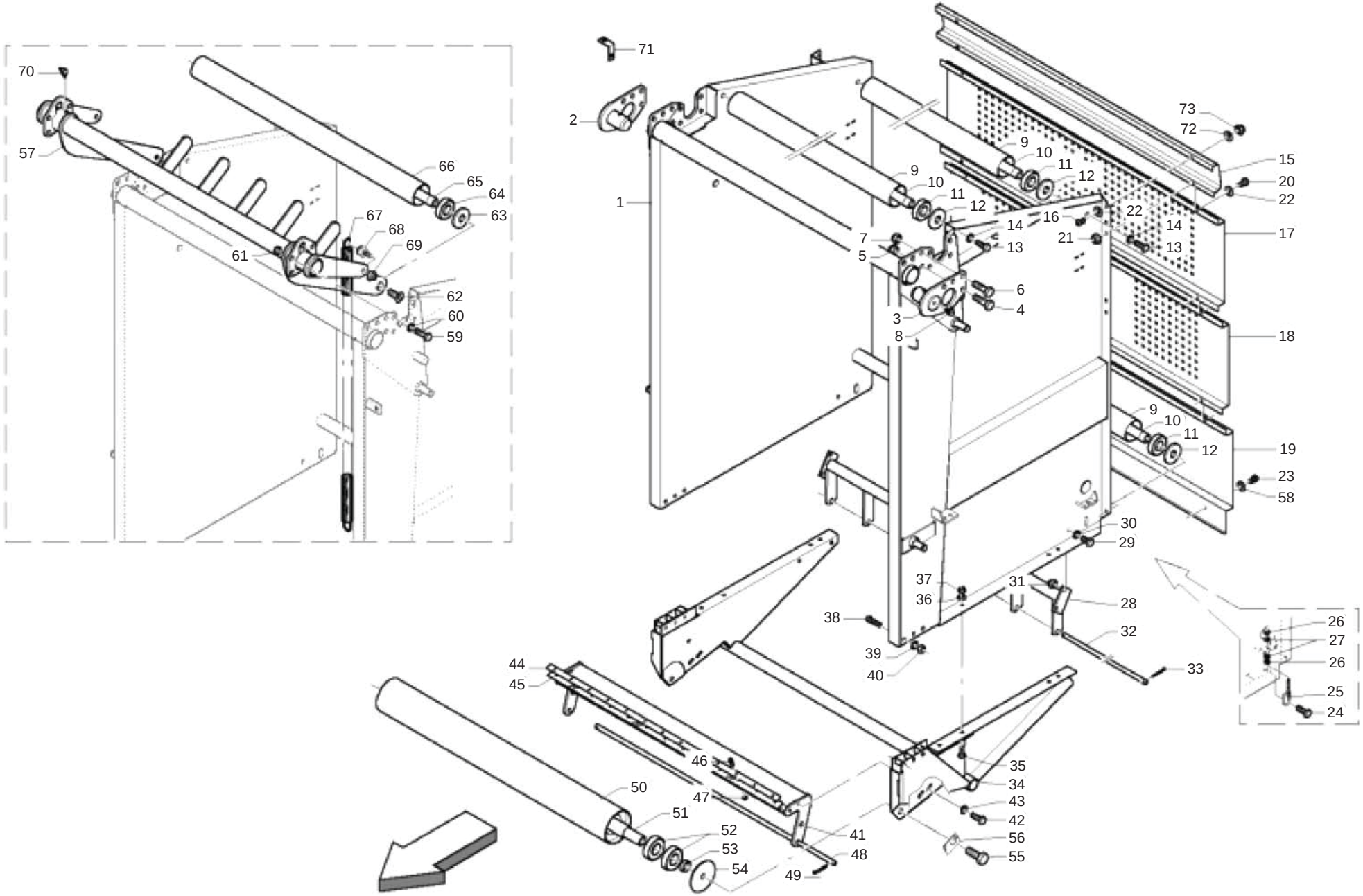




MASCHIO

cod. F07022223

# PORTELLONE
## *REAR GATE*

TAV_020

| Pos. | Cod. | Descrizione | Description | Description | Benennung | Descripcion |
|---|---|---|---|---|---|---|
| 1 | B07S01551 | PORTELLONE SUPERIORE 265 | UPPER REAR GATE 265 | PORTE ARRIERE SUPERIEUR 265 | TUER OBEN 265 | |
| 2 | B07S00932 | CERNIERA DX PORTELLONE | RIGHT TAILGATE HINGE | CHARNIERE DROITE PORTE INF. | RECHTES HECKKLAPPENSCHANIER | |
| 3 | B07S00931 | CERNIERA SX PORTELLONE | LEFT TAILGATE HINGE | CHARNIERE GAUCHE PORTE POST. | LINKES HECKKLAPPENSCHANIER | |
| 4 | F01020568 | VITE M16X2X45 U5739 8.8ZN | SCR. M16X2X45 U5739 8.8ZN | VIS M 16X 2X45 U5739 8.8 ZG | SCHRAUBE M 16X 2X45 U5739 8.8 | TORNILLO M16X 2X45 U5739 8.8 |
| 5 | B00920516 | DADO M16X 1,5 D985 6S ZN | NUT M16X1,5 D985 6S ZN | ECROU | SELBSTSICHERNDE MUTTER M16-5S | |
| 6 | F01020566 | VITE M16X2X40 U5739 8.8ZN | SCR. M16X2X40 U5739 8.8ZN | VIS M16X2X40 U5739 8.8 ZN | SCHRAUBE M16X2X40 U5739 8.8 ZN | TORNILLO M16X2X40 U5739 8.8 ZN |
| 7 | B00920516 | DADO M16X 1,5 D985 6S ZN | NUT M16X1,5 D985 6S ZN | ECROU | SELBSTSICHERNDE MUTTER M16-5S | |
| 8 | B04221010 | INGRAS HYDR M10X1 90 | GREASE NIPPLE | GRAISSEUR HYDRAULIQUE | SCHMIERNIPPEL M10X1 90 | |
| 09 | B03500172 | RULLO FOLLE | IDLE ROLLER | ROULEAU FOU | UMLENKWALZE | |
| 10 | B03500214 | ALBERO LUNGO | LONG SHAFT | ARBRE LONG | LANGE WELLE | |
| 11 | B02040002 | CUSCINETTO 6307-2RS CAT.KST004 | BEARING | ROULEMENT | LAGER 6307-2RS | |
| 12 | B01300623 | CHIUSURA RULLI FOLLI | IDLE ROLLER LOCK | FERMETURE ROULEAUX FOUX | UMLENKWALZENVERSCHLUSS | |
| 13 | F01020564 | VITE M16X2X35 U5739 8.8ZN | SCR. M16X2X35 U5739 8.8ZN | VIS M 16X35 | SCHRAUBE M 16X35 | TORNILLO M 16X35 |
| 14 | B01519319 | RALLA 16X38X5 | FIFTH WHEEL | BUTEE | SCREIBE | |
| 15 | B0C100022 | CARTER POST. CAPPELLO 220-265 | CAP GUARD 265 | CARTER EN ARRIERE CHAPEAU 220- | KAPPENABDECKUNG 265 | |
| 16 | B00470820 | VITE TTEI M 8X 20-10,9 UMBRAKO | SCREW | VIS | SCHRAUBE TTEI M 8X 20-10.9 | |
| 17 | B0C100021 | CARTER INTERMEDIO | MIDDLE GUARD | CARTER INTERMEDIAIRE | MITTLERE ABDECKUNG | |
| 18 | B0C005258 | CARTER POSTERIORE PER DECAL | REAR GUARD FOR DECALS | CARTER EN ARRIERE POUR DECAL | CARTER HINTEN | |
| 19 | B0C100019 | CARTER BASSO | LOW GUARD | CARTER BAS | UNTERE ABDECKUNG | |
| 20 | B00471025 | VITE TTEI M10X 25-8.8 UNBRA | SCREW | VIS | SCHRAUBE TTEI M10X 25-8.8 | |
| 21 | F01230202 | DADO M10X1,25 D985 8 ZN | SELF-LOCKING NUT | ECROU NYLSTOP | SELBSTSICHERNDE MUTTER M10-5S | |
| 22 | F01410062 | ROS.M10 10,5X 18X 2 U6592 ZN | WASHER M10 10,5X 18X 2 U6592 | RONDELLE M10 10,5X18X2 ZN | DICHTUNGSRING M10 10,5X18X2 ZN | RONDANA M10 10,5X18X2 ZN |
| 23 | B00470820 | VITE TTEI M 8X 20-10,9 UMBRAKO | SCREW | VIS | SCHRAUBE TTEI M 8X 20-10.9 | |
| 24 | F01020564 | VITE M16X2X35 U5739 8.8ZN | SCR. M16X2X35 U5739 8.8ZN | VIS M 16X35 | SCHRAUBE M 16X35 | TORNILLO M 16X35 |
| 25 | B07S01608 | REGOLATORE RULLO | ROLLER ADJUSTER | REGLEUR ROULEAU | WALZENEINSTELLER | |
| 26 | F01200293 | DADO M12X1,75 U5588 CL8 ZN | NUT M12X1,75 U5588 6S ZN | ECROU M12X1,75 U5588 6S ZN | MUTTER M12X1,75 U5588 6S ZN | TUERCA M12X1,75 U5588 6S ZN |
| 27 | F01410076 | ROS.M12 13X 20X2,0 U1749 ZN | WASHER | RONDELLE | SCHEIBE | |
| 28 | B07S00969 | GUIDACINGHIE POST. | REAR BELTS GUIDE | GUIDE-COURROIES POSTERIEUR | HINTERE GURTENFUEHRUNG | |
| 29 | F01020508 | VITE M12X1,75X 25 U5739 8.8ZN | SCREW | VIS | SCHRAUBE | |
| 30 | F01410076 | ROS.M12 13X 20X2,0 U1749 ZN | WASHER | RONDELLE | SCHEIBE | |
| 31 | B00920412 | DADO M12X1,75 D985 8 ZN | NUT | ECROU | SELBSTSICHERNDE MUTTER M12-5S | |
| 32 | B01300628 | SPINA GUIDACINGHIE | BELT GUIDE PIN | GOUPILLE GUIDE-COURROIES | GURTENFUEHRUNGSBOLZEN | |
| 33 | B01150430 | COPIGLIA 4X 30 U1336 ZN | GALV PIN | GOUPILLE GALV | SPLINT | |
| 34 | B07S01844 | TELAIO INFER.PORTELLONE HT | LOWER REAR GATE FRAME | CHASSIS INFERIEUR PORTE ARRIER | UNTERER HECKKLAPPENRAHMEN | |
| 35 | F01020510 | VITE M12X1,75X30 U5739 8.8ZN | SCR. M12X1,75X30 U5739 8.8ZN | VIS M12X1,75X30 U5739 8.8ZN | SCHRAU.M12X1,75X30 U5739 8.8ZN | TORN. M12X1,75X30 U5739 8.8ZN |
| 36 | F01410076 | ROS.M12 13X 20X2,0 U1749 ZN | WASHER | RONDELLE | SCHEIBE | |
| 37 | B00920412 | DADO M12X1,75 D985 8 ZN | NUT | ECROU | SELBSTSICHERNDE MUTTER M12-5S | |
| 38 | B00471270 | VITE ZN M12X70 10.9 ISO 7380 | SCREW | VIS | SCHRAUBE TTEI M12X70-8.8 | |
| 39 | F01410076 | ROS.M12 13X 20X2,0 U1749 ZN | WASHER | RONDELLE | SCHEIBE | |
| 40 | B00920412 | DADO M12X1,75 D985 8 ZN | NUT | ECROU | SELBSTSICHERNDE MUTTER M12-5S | |
| 41 | B07S01023 | RASCHIATORE PORTELLONE | TAILGATE SCRAPER | RACLEUR POSTERIEUR | HECKKLAPPENABSTREIFER | |
| 42 | F01020508 | VITE M12X1,75X 25 U5739 8.8ZN | SCREW | VIS | SCHRAUBE | |
| 43 | B01531844 | RALLA 13-25-6 | FIFTH WHEEL | BUTEE | BEILAGSCHEIBE 13-25-6 | |
| 44 | B0C003205 | RINFORZO LAMA | BLADE STIFFENING BAR | RENFORT LAME | KLINGENVERSTEIFUNGSBLATT | |
| 45 | B07U00023 | LAMA RASCH. FORNITURA PIENA | SCRAPER BLADE | LAME RACLEUR | ABSTREIFERBLATT | |
| 46 | B00470620 | VITE TTEI M 6X 20-8.8 UNBRA | SCREW | VIS | SCHRAUBE TTEI M6X20-10.9 | |
| 47 | B00920106 | DADO M6X1 D985 8ZN | NUT | ECROU | SELBSTSICHERNDE MUTTER M6-5S | |
| 48 | B01300628 | SPINA GUIDACINGHIE | BELT GUIDE PIN | GOUPILLE GUIDE-COURROIES | GURTENFUEHRUNGSBOLZEN | |
| 49 | B01150430 | COPIGLIA 4X 30 U1336 ZN | GALV PIN | GOUPILLE GALV | SPLINT | |
| 50 | B07S00959 | RULLO FOLLE PORTELLONE | TAIL GATE IDLE ROLLER | ROULEAU FOU PORTE EN ARRIERE | HECKKLAPPENUMLENKWALZE | |
| 51 | B03500237 | ALBERO CORTO | SHORT SHAFT | ARBRE COURT | KURZE WELLE | |
| 52 | B02040002 | CUSCINETTO 6307-2RS CAT.KST004 | BEARING | ROULEMENT | LAGER 6307-2RS | |
| 53 | B01300523 | DISTANZIALE 35X 45X12,5 | SPACER | ENTRETOISE | DISTANZSTUECK 35X45X12,5 | |
| 54 | B01300590 | RALLA 20,5 128 10 | FIFTH WHEEL | BUTEE | SCHEIBE 20,5 128 10 | |
| 55 | F01020605 | VITE M20X2,5X50 U5739 8.8ZN | SCR. M20X2,5X50 U5739 8.8ZN | VIS M 20X2,5X50 | SCHRAUBE M 20X2,5X50 | TORNILLO M 20X2,5X50 |
| 56 | B0C004148 | RALLA DI FERMO | LOCK WASHER | BUTEE D ARRET | ANSCHLAGPLATTE | |
| 57 | B07S01554 | II BILANCIERE 265 | II ROCKER | BALANCIER II 265 | II. KIPPHEBEL | |

# TAV_020

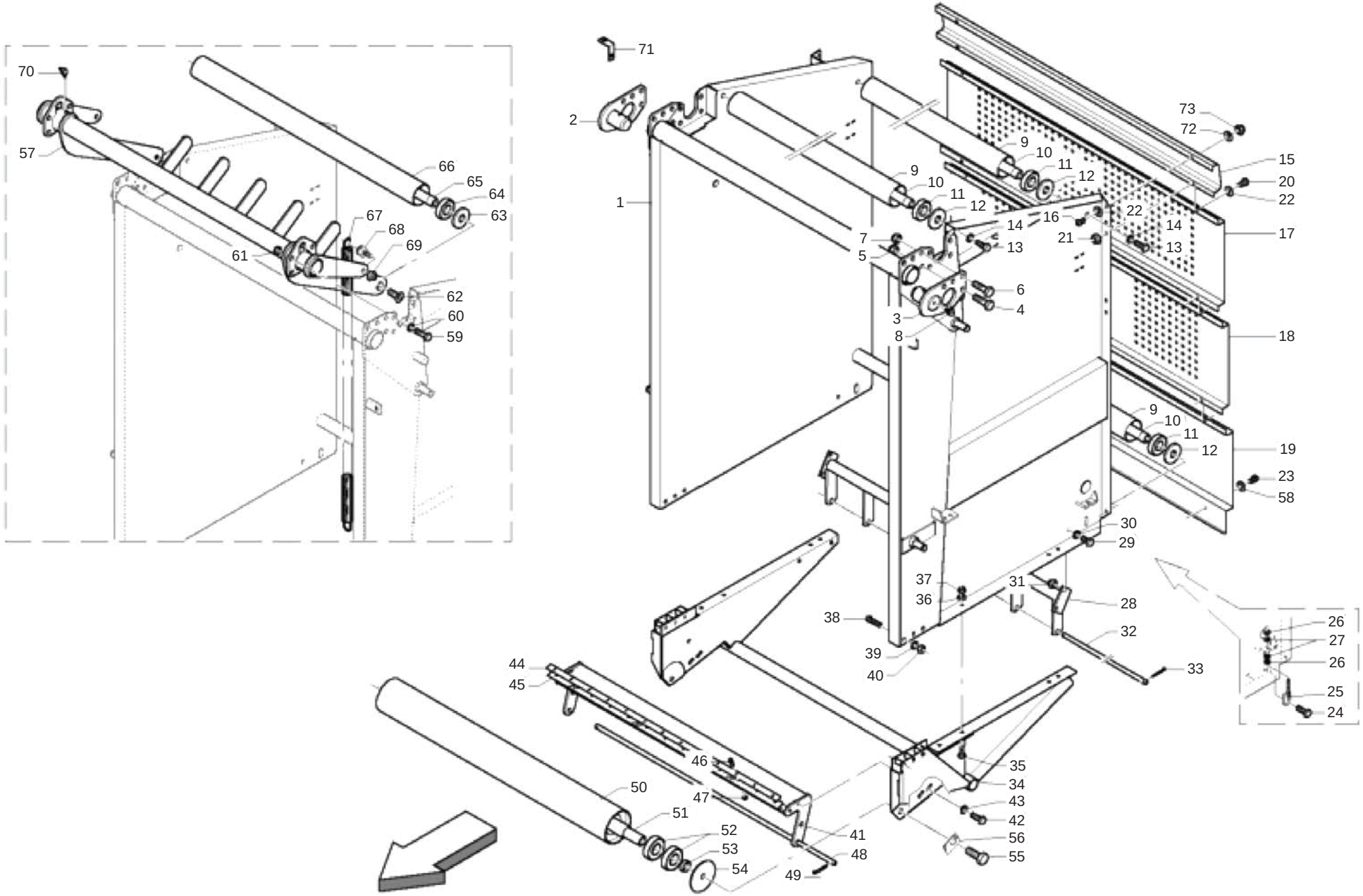




MASCHIO

cod. F07022223

# PORTELLONE
## *REAR GATE*

TAV_020

| Pos. | Cod. | Descrizione | Description | Description | Benennung | Descripcion |
|---|---|---|---|---|---|---|
| 58 | F01420048 | ROS.M8 8,4X 24X 2 U6593 ZN | WASHER | RONDELLE | SCHEIBE | |
| 59 | F01020252 | VITE M16X2X50 U5737 8.8ZN | SCR. M16X2X50 U5737 8.8 ZN | VIS M16X2X50 U5737 8.8 ZN | SCHRAUBE M16X2X50 U5737 8.8 ZN | TORNILLO M16X2X50 U5737 8.8 ZN |
| 60 | F01410100 | ROS.M16 17X 30X 3 U6592 ZN | WASHER | RONDELLE | SCHEIBE | |
| 61 | B00920516 | DADO M16X 1,5 D985 6S ZN | NUT M16X1,5 D985 6S ZN | ECROU | SELBSTSICHERNDE MUTTER M16-5S | |
| 62 | F01030148 | VITE M16X2X35 U5933 10.9ZD | SCREW M16X2X35 U5933 10.9ZD | VIS M16X2X35 U5933 10.9ZD | SCHRAUBE M16X2X35 U5933 10.9ZD | TORNILLO M16X2X35 U5933 10.9ZD |
| 63 | B01300623 | CHIUSURA RULLI FOLLI | IDLE ROLLER LOCK | FERMETURE ROULEAUX FOUX | UMLENKWALZENVERSCHLUSS | |
| 64 | B02040002 | CUSCINETTO 6307-2RS CAT.KST004 | BEARING | ROULEMENT | LAGER 6307-2RS | |
| 65 | B03500213 | ALBERO CORTO | SHORT SHAFT | ARBRE COURT | KURZE WELLE | |
| 66 | B03500165 | RULLO FOLLE | IDLE ROLLER | ROULEAU FOU | UMLENKWALZE | |
| 67 | B01800037 | MOLLA II BILANCERE | II. BELTTENSIONER SPRING | RESSORT II BILANCIER | ZWEITER GURTENSPANNERFEDER | |
| 68 | B01300937 | PERNO MOLLONE | SPRING BOLT | PIVOT | FEDERBOLZEN | |
| 69 | B00920516 | DADO M16X 1,5 D985 6S ZN | NUT M16X1,5 D985 6S ZN | ECROU | SELBSTSICHERNDE MUTTER M16-5S | |
| 70 | B04210610 | INGRAS HYDR A 45 M 6X1 | GREASE NIPPLE | GRAISSEUR HYDRAULIQUE | SCHMIERNIPPEL M6X1 45 | |
| 71 | B0C002357 | PIASTRINA ATTACCO CAVI | CABLE ATTACHMENT PLATE | | | |
| 72 | F01410051 | ROS.M8 8,4X 17X1,6 U6592 ZN | WASHER M8 8,4X17X1,6 U6592 ZN | RONDELLE | SCHEIBE | |
| 73 | B00920208 | DADO M8X1 D985 8ZN | NUT M8X1 D985 8ZN | ECROU | SELBSTSICHERNDE MUTTER M8-5S | |

TAV_510

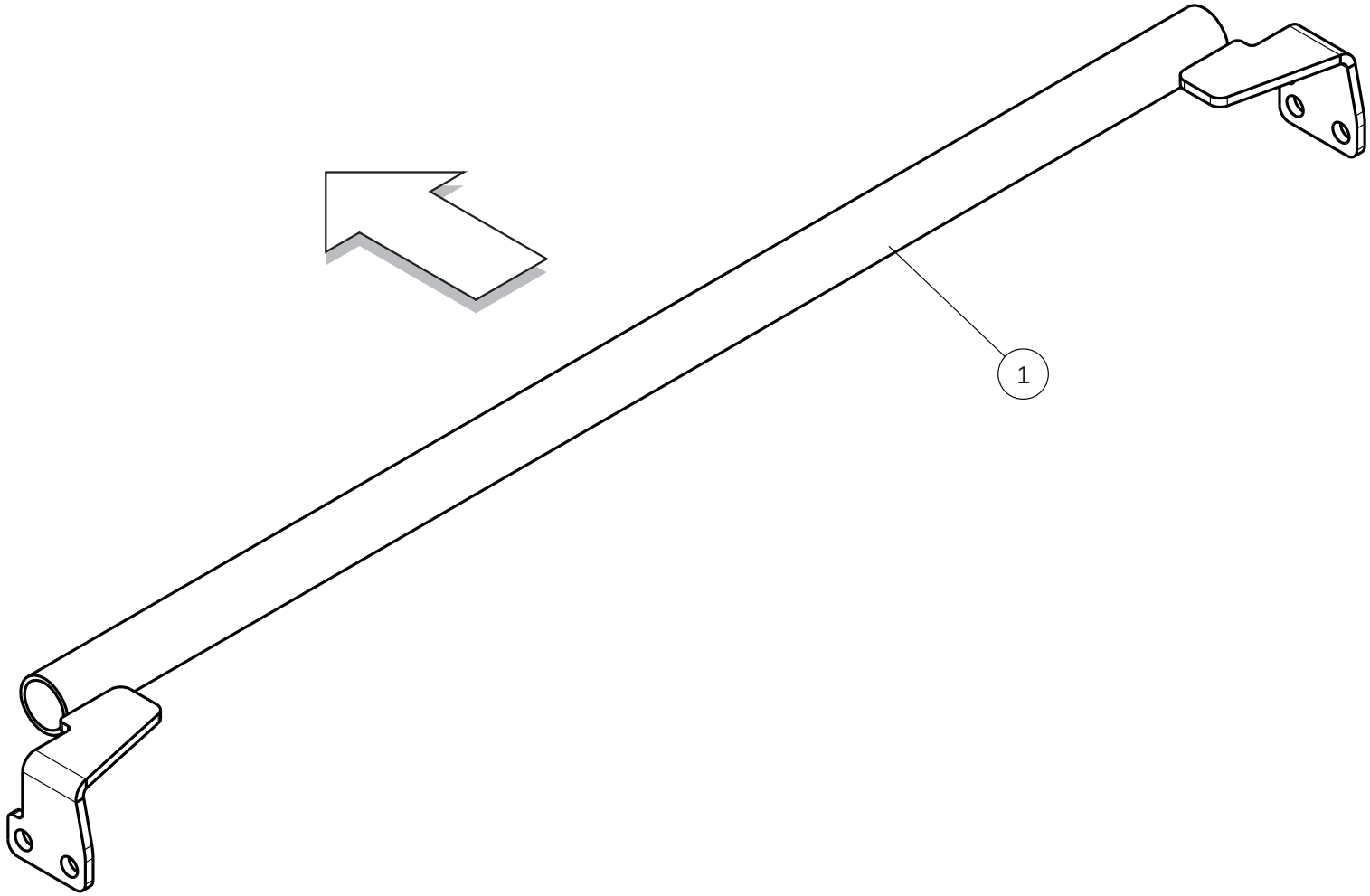

## BLOCCO CINGHIE
## *BELTS LOCK*

TAV_510

| Pos. | Cod. | Descrizione | Description | Description | Benennung | Descripcion |
|---|---|---|---|---|---|---|
| 1 | B07S01901 | BLOCCO CINGHIE | BELT LOCK | | | |

TAV_025

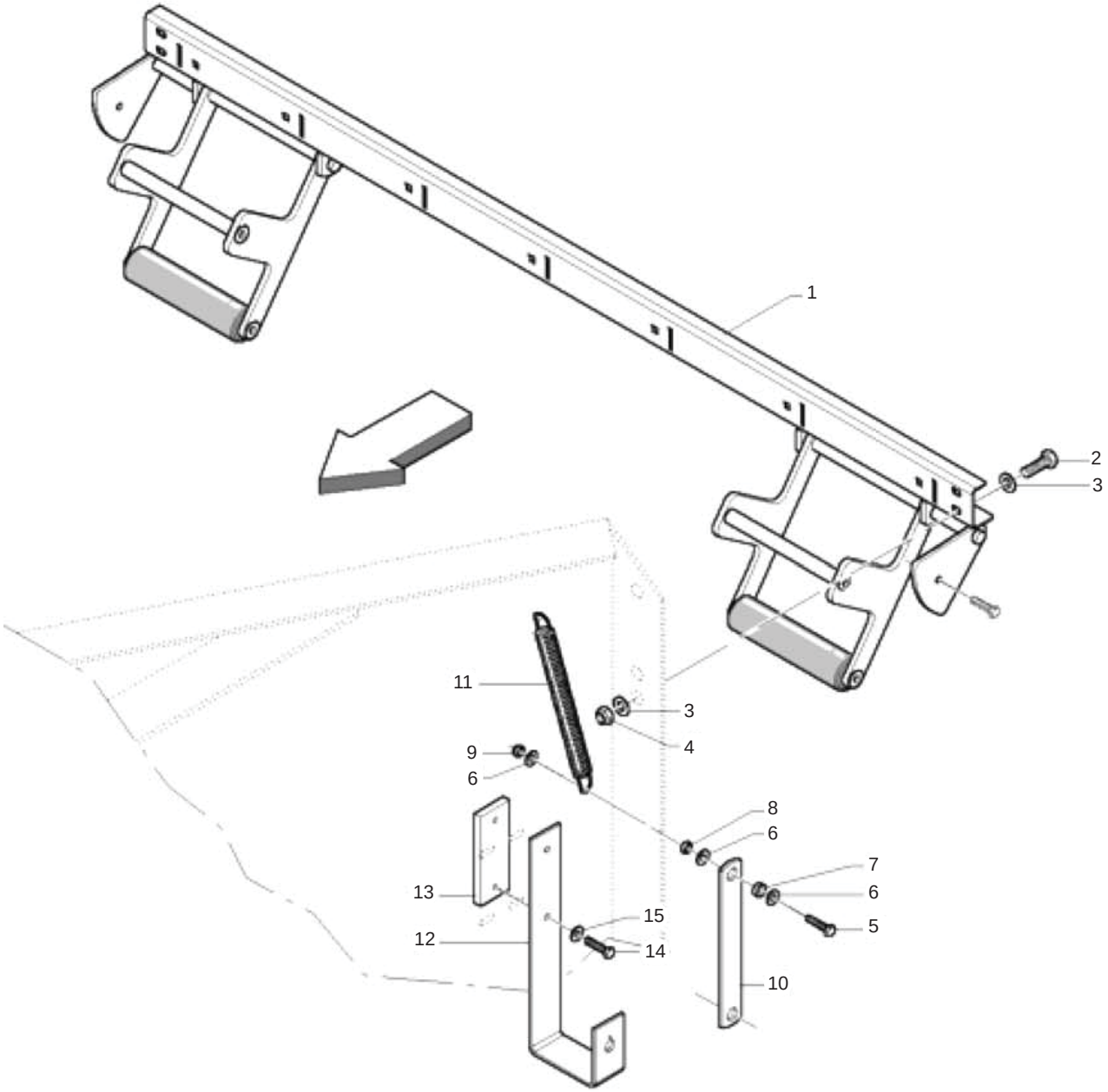
1
2
3
11
3
4
9
6
8
6
7
6
5
13
15
12
14
10

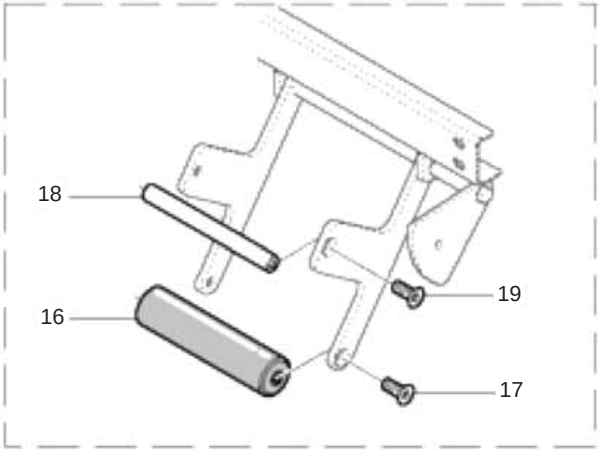
18
19
16
17

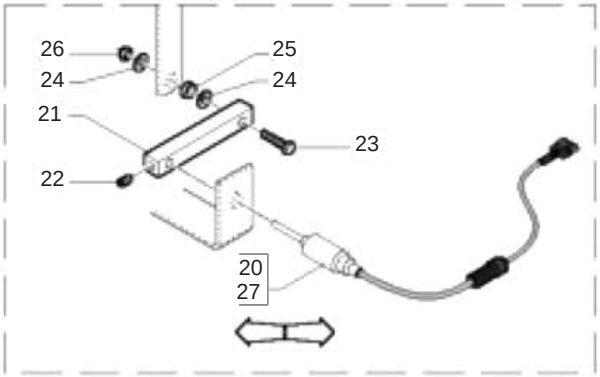
26
25
24
24
21
23
22
20
27

# SEGNALATORI DI CARICAMENTO
## *LOADER INDICATORS*

TAV_025

| Pos. | Cod. | Descrizione | Description | Description | Benennung | Descripcion |
|---|---|---|---|---|---|---|
| 1 | B07S00951 | SEGNALATORI | INDICATORS | INDICATEURS | ANZEIGER | |
| 2 | F01020472 | VITE M10X1,5X25 U5739 8.8ZN | SCR. M10X1,5X25 U5739 8.8ZN | VIS M10X1,5X25 U5739 8.8 ZN | SCHRAUBE M10X1,5X25 U5739 8.8 | TORNILLO 10X25 U5739 8.8 ZN |
| 3 | F01410062 | ROS.M10 10,5X 18X 2 U6592 ZN | WASHER M10 10,5X 18X 2 U6592 | RONDELLE M10 10,5X18X2 ZN | DICHTUNGSRING M10 10,5X18X2 ZN | RONDANA M10 10,5X18X2 ZN |
| 4 | F01230202 | DADO M10X1,25 D985 8 ZN | SELF-LOCKING NUT | ECROU NYLSTOP | SELBSTSICHERNDE MUTTER M10-5S | |
| 5 | F01020413 | VITE M6X1X40 U5739 8.8ZN | SCR. M6X1X40 U5739 8.8ZN | VIS M 6X1X40 | SCHRAUBE M 6X1X40 | TORNILLO M 6X1X40 |
| 6 | F01420035 | ROS.M6 6,4X 18X1,6 U6593 ZN | WASHER | RONDELLE | SCHEIBE | |
| 7 | B01300866 | BOCCOLA DI MOVIMENTO | BUSH | DOUILLE | BUCHSE | |
| 8 | F01200232 | DADO M6X1 U5588 CL8 ZN | NUT M6X1 U5588 6.8ZN | ECROU 6 UNI 5588 6.8 ZN | MUTTER 6 UNI 5588 6.8 ZN | TUERCA 6 UNI 5588 6.8 ZN |
| 9 | B00920106 | DADO M6X1 D985 8ZN | NUT | ECROU | SELBSTSICHERNDE MUTTER M6-5S | |
| 10 | B0C004227 | PIATTO SPOSTAMENTO SENSORE | SENSOR SHIFTING PLATE | PLAT COURSE SENSEUR | SENSORVERSCHIEBERPLATTE | |
| 11 | B01810409 | MOLLA T FILO D.2,5 DP14,5 L210 | SPRING | RESSORT | T- FEDER | |
| 12 | B0C004231 | ATTACCO POTENZIOMETRO | POTENZIOMETER ATTACHMENT | ATTELAGE POTENTIOMETRE | SENSORANSCHLUSS | |
| 13 | B0C004008 | PIASTRINA FINECORSA | LIMIT SWITCH PLATE | PLAQUETTE FIN DE COURSE | ENDSCHALTERPLATTE | |
| 14 | F01020380 | VITE M5X0,8X20 U5739 8.8ZN | SCR. M5X0,8X20 U5739 8.8ZN | VIS M5X0,8X20 U5739 8.8ZN | SCHRAUBE M5X0,8X20 U5739 8.8ZN | TORNILLO M5X0,8X20 U5739 8.8ZN |
| 15 | F01420023 | ROS.M5 5,3X 15X1,5 U6593 ZN | WASHER M5 5,3X 15X1,5 U6593 | | | |
| 16 | B07M00276 | RULLO SEGNALATORE | INDICATOR ROLLER | ROULEAU SIGNALEUR | ANZEIGEROLLE | |
| 17 | B00440820 | VITE TSPEI M 8X 20-10.9 UNI 5 | SCREW | VIS | SCHRAUBE TSPEI M8X 20-10.9 | |
| 18 | B03500024 | COLLEGAMENTO | CONNECTION | CONNEXION | VERBINDUNG | |
| 19 | B00440820 | VITE TSPEI M 8X 20-10.9 UNI 5 | SCREW | VIS | SCHRAUBE TSPEI M8X 20-10.9 | |
| 20 | B0E0P0028 | SENS.ANAL.CARICO CAMERA SX | SENSOR | SENSEUR | SENSOR LADUNGKAMMER LINKS | |
| 21 | B0C004228 | PIATTIN0 | PLATE | PETIT PLAT | PLATTE | |
| 22 | B00430610 | VITE STEI M 6X10-12.9 UNI 5 | SCREW | VIS | SCHRAUBE STEI M6X10-12.9 | |
| 23 | F01020408 | VITE M6X1X30 U5739 8.8ZN | SCR. M6X1X30 U5739 8.8ZN | VIS M 6X1X30 | SCHRAUBE M 6X1X30 | TORNILLO M 6X1X30 |
| 24 | F01420035 | ROS.M6 6,4X 18X1,6 U6593 ZN | WASHER | RONDELLE | SCHEIBE | |
| 25 | B01300866 | BOCCOLA DI MOVIMENTO | BUSH | DOUILLE | BUCHSE | |
| 26 | B00920106 | DADO M6X1 D985 8ZN | NUT | ECROU | SELBSTSICHERNDE MUTTER M6-5S | |
| 27 | B0E0P0029 | SENS.ANAL.CARICO CAMERA DX | PRESSURE SWITCH IFM PT3551 | SENSEUR | SENSOR LADUNGKAMMER RECHTS | |

TAV_030

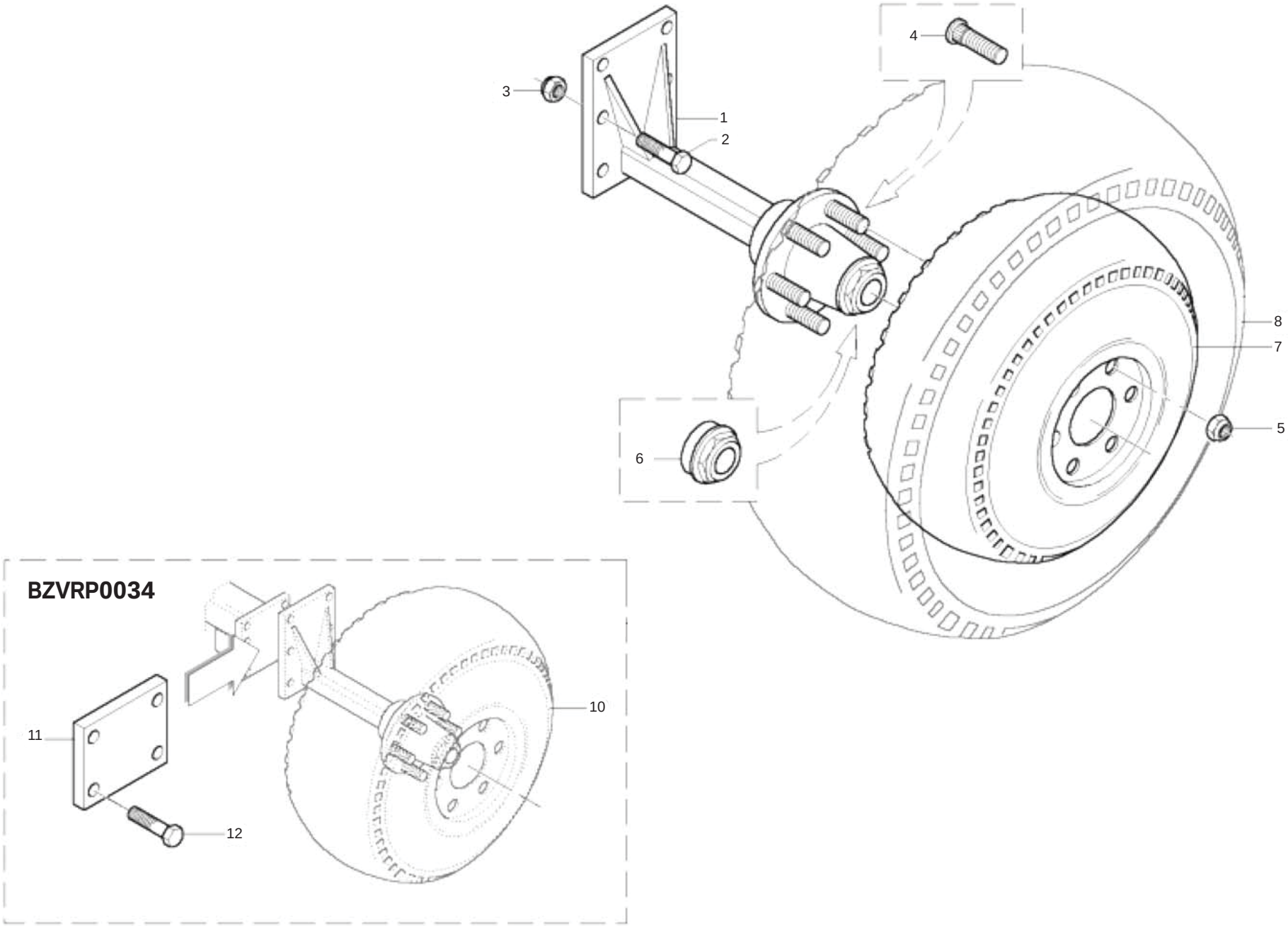

# RUOTE
## *WHEELS*

TAV_030

| Pos. | Cod. | Descrizione | Description | Description | Benennung | Descripcion |
|---|---|---|---|---|---|---|
| 1 | B07100026 | MOZZO CON FUSELLO E PIASTRA | HUB WITH STUB AXLE | MOYEU AVEC AXE ET PLAQUE | NABE MIT ACHSSCHENKEL | |
| 2 | F01020309 | VITE M20X2,5X70 U5737 8.8ZN | SCR. M20X2,5X70 U5737 8.8ZN | VIS M20X2,5X70 | SCHRAUBE M20X2,5X70 | TORNILLO M20X2,5X70 |
| 3 | F01230259 | DADO AUTOB.BASSO M20 8 D985 ZN | NUT | ECROU | SELBSTSICHERNDE MUTTER M20-5S | |
| 4 | B0R000273 | COLON.M18X1,5 FUSELLO 7100014 | WHEEL STUD BOLT M18X1,5 | COLONNETTE M18X1,5 FUSEE 7100 | RADBOLZEN M18X1,5 | |
| 5 | B00821318 | DADO E SFERICO M18X1,5 ZINC. | NUT | ECROU | KUGELMUTTER M18X1,5 | |
| 6 | B07100050 | TAPPO PARAPOLVERE 80 NEUTRO | CAP | BOUCHON | PROPFEN | |
| 7 | B07100022 | RUOTA CPLTA 400-15.5 6F P 14PR | COMPLETE WHEEL | ROUE 400-15.5 | RAD KOMPLETT 400.15.5 6F P14PR | |
| 8 | B07100013 | RUOTA CPLTA 11,5 80-15,3 6F P | COMPLETE WHEEL 11,5 80-15,3 | ROUE COMPLETE 11,5 80-15,3 | KOMPLETTES RAD 11,5 80-15,3 | |
| 10 | B07100041 | RUOTA CPLTA 19.0 45-176F P14PR | COMPLETE TYRE | ROUE COMPLETE | KOMPLETTES RAD 19,0 45-17 | |
| 11 | B0C003765 | PIASTRA DI SPESSORAMENTO | SHIM PLATE | PLAQUE | DICHTUNGSPLATTE | |
| 12 | F01020987 | VITE M20X2,5X90 U5737 8.8 ZN | GALV.SCR.M20X2,5X90 U5737 8.8 | | | |

# TAV_035

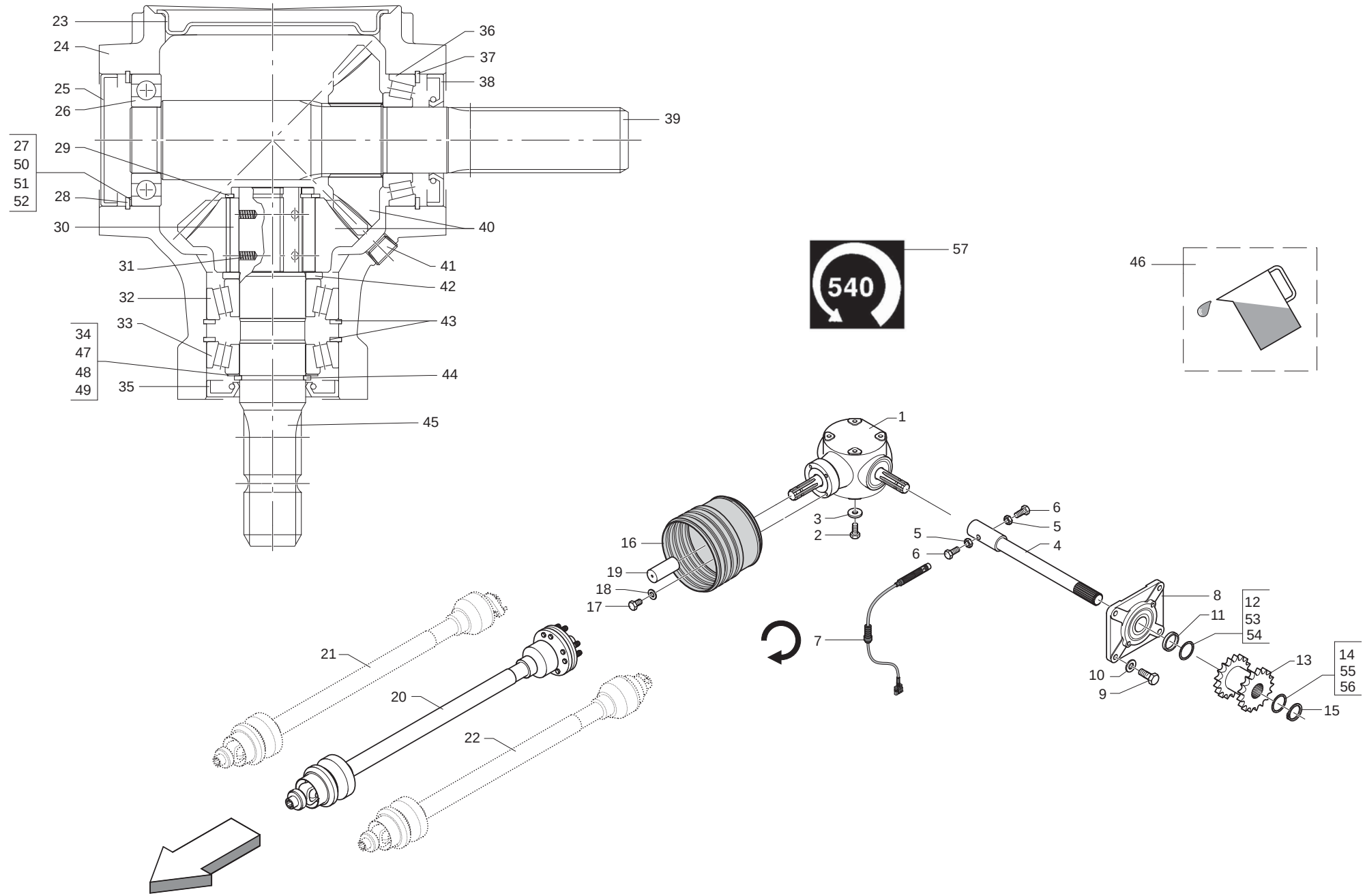




MASCHIO

# SCATOLA DI TRASMISSIONE
## *GEAR BOX*

TAV_035

| Pos. | Cod. | Descrizione | Description | Description | Benennung | Descripcion |
|---|---|---|---|---|---|---|
| 1 | B03900177 | SCAT.BP 2050-1 1-RL-S ALB. | GEAR BOX | BOITE | GETRIEBE BYPY 2050 | |
| 2 | F01020512 | VITE M12X1,75X35 U5739 8.8ZN | SCR. M12X1,75X35 U5739 8.8ZN | VIS M12X1,75X35 5739 8.8 ZN | SCHR. M12X1,75X35 5739 8.8 ZN | TORN. M12X1,75X35 5739 8.8 ZN |
| 3 | B01516038 | RALLA 13 32 5 | FIFTH WHEEL | BUTEE | SCHEIBE | |
| 4 | B0R000304 | ALBERO PROLUNGA L=602 | EXTENSION SHAFT L=602 | ARBRE RALLONGE L=602 | VERLAENGERUNGSWELLE L=602 | |
| 5 | F01200232 | DADO M6X1 U5588 CL8 ZN | NUT M6X1 U5588 6.8ZN | ECROU 6 UNI 5588 6.8 ZN | MUTTER 6 UNI 5588 6.8 ZN | TUERCA 6 UNI 5588 6.8 ZN |
| 6 | F01020040 | VITE M6X1X40 U5737 8.8ZN | SCR. M6X1X40 U5737 8.8ZN | VIS M6X1X40 U5737 8.8ZN | SCHRAU. M6X1X40 U5737 8.8ZN | TORNI. M6X1X40 U5737 8.8ZN |
| 7 | B0E0P0013 | SENS DIG.SCATOLA E BILANCERE | DIGITAL SENSOR PROXIMITY M12 | CAPTEUR DIGITAL AVEC PROXIMITY | SENSOR MIT PROXIMITY M 12 | |
| 8 | B02700051 | SUPPORTO FLANGIATO | FLANGED SUPPORT | SUPPORT EMBOUTI | FLANSCHLAGER | |
| 9 | F01020512 | VITE M12X1,75X35 U5739 8.8ZN | SCR. M12X1,75X35 U5739 8.8ZN | VIS M12X1,75X35 5739 8.8 ZN | SCHR. M12X1,75X35 5739 8.8 ZN | TORN. M12X1,75X35 5739 8.8 ZN |
| 10 | F01410076 | ROS.M12 13X 20X2,0 U1749 ZN | WASHER | RONDELLE | SCHEIBE | |
| 11 | B01329469 | DISTANZIALE 40X48X 7 | SPACER | ENTRETOISE | DISTANZSTUECK 40X48X7 | |
| 12 | B01300125 | SPES. 40 48 0,5 ZINCATO | SHIM GALV | ENTRETOISE GALV | DISTANZSTUECK 40 48 0,5 | |
| 13 | B03400224 | INGR.DOPPIO Z=12 12-1 SCATOLA | DOUBLE GEAR Z=12 12-1 | ENGRENAGE DOUBLE | DOPPEL ZAHNRAD Z=12 12-1 | |
| 14 | B01300151 | SPES. 40 48 2 ZINCATO | SHIM | ENTRETOISE | DISTANZSTUECK 40 48 2 | |
| 15 | B01700040 | ANEL. D ARR. ALBERO 40-E UNI 3 | SEEGER RING | BAGUE SEEGER | SEEGERRING 40-E | |
| 16 | B07V00076 | CONTROCUFFIA CPLTA SFT 3950 | COMPLETE COUNTER-HOUSING | CONTRE-BOL COMPLETE SFT-BYPY | GEGENHAUBE | |
| 17 | F01020472 | VITE M10X1,5X25 U5739 8.8ZN | SCR. M10X1,5X25 U5739 8.8ZN | VIS M10X1,5X25 U5739 8.8 ZN | SCHRAUBE M10X1,5X25 U5739 8.8 | TORNILLO 10X25 U5739 8.8 ZN |
| 18 | F01410062 | ROS.M10 10,5X 18X 2 U6592 ZN | WASHER M10 10,5X 18X 2 U6592 | RONDELLE M10 10,5X18X2 ZN | DICHTUNGSRING M10 10,5X18X2 ZN | RONDANA M10 10,5X18X2 ZN |
| 19 | G19002131 | PROTEZIONE P.D.P. | PDP GUARD | | | |
| 20 | B03600120 | CAR BO4 Z6-Z6 OMFRZ 1350 L1577 | PTO BO4 Z6-Z6 OMFRZ 1350 L1577 | CARDAN | GELENKWELLE T.BYPY654 OC F | |
| 21 | B03600049 | CAR BO7 Z6-Z6 OMBUL 2700 L1510 | PTO BO7 Z6-Z6 OMBUL 2700 L1510 | CARDAN TRACTEUR FF20-50 | GELENKWELLE | |
| 22 | B03600092 | CAR BO7 Z6-Z6 OMCAM 2500 L1589 | PTO BO7 Z6-Z6 OMCAM 2500 L1589 | CARDAN | TRAKTOR KARDAN BYPY656 | |
| 23 | B0R000255 | COPERCHIO SCATOLA D=130 | BOX CAP | COUVERCLE BOITE D=130 | GETRIEBEGEHAUSEDECKEL | |
| 24 | B0R000305 | CORPO SCATOLA 2050 | BOX 2050 | | | |
| 25 | B0R000090 | CAPPELLOTTO 80X10 | SEAL 80X10 | CAPOUCHON 80X10 | KAPPE 80X10 | |
| 26 | B02004018 | CUSCINETTO 6208 CAT.A-ST004 | BEARING | ROULEMENT | LAGER | |
| 27 | B0R000262 | ANELLO SPES. 69,3X79,7X0,2 | SHIM RING 69,3X79,7X0,2 | BAGUE EPAISSEUR 69,3X79,7X0,2 | RING 69,3X79,7X0,2 | |
| 28 | B0R000256 | ANELLO ELASTICO 80-I SP=2,5 | ELASTIC RING 80-I SP=2,5 | BAGUE RESSORT 80-I SP=2,5 | ELASTISCHER RING | |
| 29 | B0R000298 | ANELLO ELASTICO 50-E SP=2,0 | RETAINING RING 50-E SP=2,0 | BAGUE RESSORT 50-E SP=0,8 | RING EL. 50-E | |
| 30 | B0R000307 | PIASTR. RL 29870 | RL PLATE | PLAQUETTE RL | PLATTE RLL | |
| 31 | B0R000089 | MOLLA CONF DA 08 PZ | SPRING | RESSORT | FEDER | |
| 32 | B02124024 | CUSC. 32208 CAT.A-ST004 | BEARING | ROULEMENT | LAGER | |
| 33 | B02124019 | CUSC. 30208 CAT.A-ST004 | BEARING | ROULEMENT | LAGER | |
| 34 | B0R000261 | ANELLO SPES. 40,2X54,8X0,1 | SHIM RING 40,2X54,8X0,1 | BAGUE EPAISSEUR 40,2X54,8X0,1 | DISTANZRING 40,2X54,8X0,1 | |
| 35 | F03010277 | ANELLO T.AS 40X 80X10 D3760NBR | OIL SEAL 40X80X10 NBR | BOURAGE 40X80X10 NBR | OELABDICHTUNG 40X80X10 NBR | JUNTA DE ACEITE 40X80X10 NBR |
| 36 | B02124019 | CUSC. 30208 CAT.A-ST004 | BEARING | ROULEMENT | LAGER | |
| 37 | B0R000256 | ANELLO ELASTICO 80-I SP=2,5 | ELASTIC RING 80-I SP=2,5 | BAGUE RESSORT 80-I SP=2,5 | ELASTISCHER RING | |
| 38 | F03010277 | ANELLO T.AS 40X 80X10 D3760NBR | OIL SEAL 40X80X10 NBR | BOURAGE 40X80X10 NBR | OELABDICHTUNG 40X80X10 NBR | JUNTA DE ACEITE 40X80X10 NBR |
| 39 | B0R000975 | ALBERO SCAT.EXTREME HT | BOX SHAFT FOR EXTREME HT | ARBRE BOITE EXTREME HT | WELLE | |
| 40 | B0R000308 | COPPIA CONICA R=1 1 | R=1 1 BEVEL GEAR PAIR | COUPLE CONIQUE R=1 1 | ZAHNRADPAAR R=1 1 | |
| 41 | B0R000175 | TAPPO 3 8 GAS-C DIN 906 | PLUG | BOUCHON 3 8 GAS-C DIN 906 | VERSCHLUSS DECKER 3 8 GAS-C | |
| 42 | B0R000285 | DISTANZIALE | SPACER | ENTRETOISE | DISTANZSTUECK | |
| 43 | B0R000256 | ANELLO ELASTICO 80-I SP=2,5 | ELASTIC RING 80-I SP=2,5 | BAGUE RESSORT 80-I SP=2,5 | ELASTISCHER RING | |
| 44 | B0R000257 | ANELLO ELASTICO 40-E SP=2,5 | ELASTIC RING 40-E SP=2,5 | BAGUE RESSORT 40-E SP=2,5 | ELASTISCHER RING | |
| 45 | B0R000306 | ALBERO ASSE Z R.L. | AXLE SHAFT Z R.L. | ARBRE AXE Z RL | ACHSWELLE Z R.L. | |
| 46 | F03260016 | OLIO AGIP BLASIA 150 | OIL AGIP BLASIA 150 | | | |
| 47 | B0R000260 | ANELLO SPES. 40,2X54,8X0,4 | SHIM RING 40,2X54,8X0,4 | BAGUE EPAISSEUR 40,2X54,8X0,4 | DISTANZRING 40,2X54,8X0,4 | |
| 48 | B0R000259 | ANELLO SPES. 40,2X54,8X0,3 | SHIM RING 40,2X54,8X0,3 | BAGUE EPAISSEUR 40,2X54,8X0,3 | ELASTISCHER RING | |
| 49 | B0R000258 | ANELLO SPES. 40,2X54,8X0,2 | SHIM RING 40,2X54,8X0,2 | BAGUE EPAISSEUR 40,2X54,8X0,2 | ELASTISCHER RING | |
| 50 | B0R000263 | ANELLO SPES. 69,3X79,7X0,3 | SHIM RING 69,3X79,7X0,3 | BAGUE EPAISSEUR 69,3X79,7X0,3 | SCHEIBE 69,3X79,7X0,3 | |
| 51 | B0R000264 | ANELLO SPES. 69,3X79,7X0,4 | SHIM RING 69,3X79,7X0,4 | BAGUE EPAISSEUR 69,3X79,7X0,4 | DISTANZRING 69,3X79,7X0,4 | |
| 52 | B0R000265 | ANEL SPES. 69,3X79,7X0,1 34006 | SHIM RING 69,3X79,7X0,1 34006 | BAGUE EPAISSEUR 69,3X79,7X0,1 | RING 69,3X79,7X0,1 | |
| 53 | B01300151 | SPES. 40 48 2 ZINCATO | SHIM | ENTRETOISE | DISTANZSTUECK 40 48 2 | |
| 54 | B01300126 | SPES. 40 48 1 ZINC.ST_013 | SHIM | ENTRETOISE | DISTANZSTUECK 40 408 1 | |
| 55 | B01300125 | SPES. 40 48 0,5 ZINCATO | SHIM GALV | ENTRETOISE GALV | DISTANZSTUECK 40 48 0,5 | |
| 56 | B01300126 | SPES. 40 48 1 ZINC.ST_013 | SHIM | ENTRETOISE | DISTANZSTUECK 40 408 1 | |
| 57 | B07500187 | ET 540 GIRI - RICC SX NORMA | DECAL 540RPM - LEFT BURR | DECAL 540 T H-SENS DE ROTATIO | AUFKLEBE 540 RPM | |

TAV_040

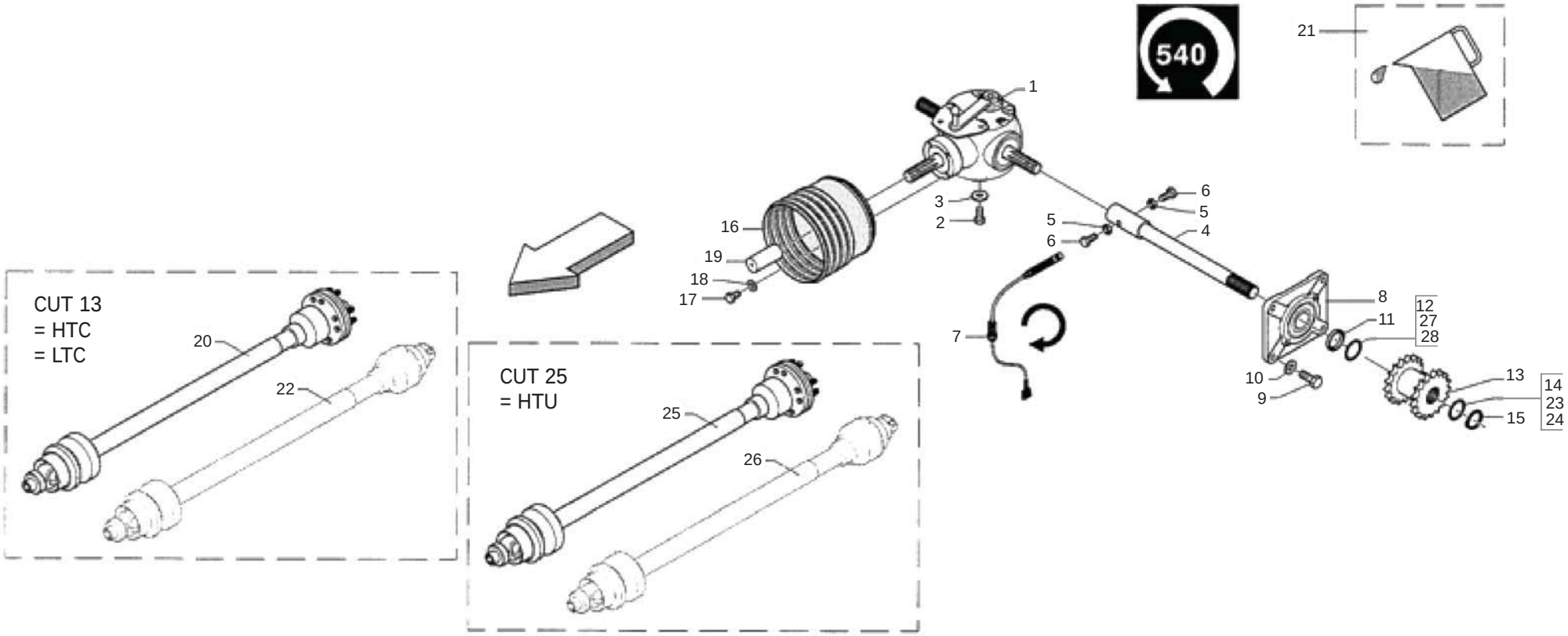
540
1
2
3
4
5
6
7
8
9
10
11
12
13
14
15
16
17
18
19
20
21
22
23
24
25
26
27
28
CUT 13
= HTC
= LTC
CUT 25
= HTU

# SCATOLA DI TRASMISSIONE PTO
## *PTO GEAR BOX*

TAV_040

| Pos. | Cod. | Descrizione | Description | Description | Benennung | Descripcion |
|---|---|---|---|---|---|---|
| 1 | B03900179 | SCAT.BP 2070-1 1-RL-DIS S.ALB. | GEAR BOX | BOITE | GETRIEBE BYPY 2070 | |
| 2 | F01020540 | VITE M14X2X30 U5739 8.8ZN | SCR. M14X2X30 U5739 8.8ZN | VIS M14X2X30 U5739 8.8ZN | SCHRAUBE M14X2X30 U5739 8.8ZN | TORNILLO M14X2X30 U5739 8.8ZN |
| 3 | B01516040 | RALLA 15 42 6 | FIFTH WHEEL | BUTEE | SCHEIBE | |
| 4 | B0R000304 | ALBERO PROLUNGA L=602 | EXTENSION SHAFT L=602 | ARBRE RALLONGE L=602 | VERLAENGERUNGSWELLE L=602 | |
| 5 | F01200232 | DADO M6X1 U5588 CL8 ZN | NUT M6X1 U5588 6.8ZN | ECROU 6 UNI 5588 6.8 ZN | MUTTER 6 UNI 5588 6.8 ZN | TUERCA 6 UNI 5588 6.8 ZN |
| 6 | B00180625 | VITE M6X1X 25 U5739 8.8ZN | SCREW | VIS | SCHRAUBE | |
| 7 | B0E0P0013 | SENS DIG.SCATOLA E BILANCERE | DIGITAL SENSOR PROXIMITY M12 | CAPTEUR DIGITAL AVEC PROXIMITY | SENSOR MIT PROXIMITY M 12 | |
| 8 | B02700051 | SUPPORTO FLANGIATO | FLANGED SUPPORT | SUPPORT EMBOUTI | FLANSCHLAGER | |
| 9 | F01020512 | VITE M12X1,75X35 U5739 8.8ZN | SCR. M12X1,75X35 U5739 8.8ZN | VIS M12X1,75X35 5739 8.8 ZN | SCHR. M12X1,75X35 5739 8.8 ZN | TORN. M12X1,75X35 5739 8.8 ZN |
| 10 | F01410076 | ROS.M12 13X 20X2,0 U1749 ZN | WASHER | RONDELLE | SCHEIBE | |
| 11 | B01329469 | DISTANZIALE 40X48X 7 | SPACER | ENTRETOISE | DISTANZSTUECK 40X48X7 | |
| 12 | B01300126 | SPES. 40 48 1 ZINC.ST_013 | SHIM | ENTRETOISE | DISTANZSTUECK 40 408 1 | |
| 13 | B03400224 | INGR.DOPPIO Z=12 12-1 SCATOLA | DOUBLE GEAR Z=12 12-1 | ENGRENAGE DOUBLE | DOPPEL ZAHNRAD Z=12 12-1 | |
| 14 | B01300125 | SPES. 40 48 0,5 ZINCATO | SHIM GALV | ENTRETOISE GALV | DISTANZSTUECK 40 48 0,5 | |
| 15 | B01700040 | ANEL. D ARR. ALBERO 40-E UNI 3 | SEEGER RING | BAGUE SEEGER | SEEGERRING 40-E | |
| 16 | B07V00076 | CONTROCUFFIA CPLTA SFT 3950 | COMPLETE COUNTER-HOUSING | CONTRE-BOL COMPLETE SFT-BYPY | GEGENHAUBE | |
| 17 | B00181015 | VITE M10X1,5 X 16 U5739 8.8ZN | SCREW | VIS | SCHRAUBE | |
| 18 | F01410062 | ROS.M10 10,5X 18X 2 U6592 ZN | WASHER M10 10,5X 18X 2 U6592 | RONDELLE M10 10,5X18X2 ZN | DICHTUNGSRING M10 10,5X18X2 ZN | RONDANA M10 10,5X18X2 ZN |
| 19 | G19002131 | PROTEZIONE P.D.P. | PDP GUARD | | | |
| 20 | B03600076 | CAR BO7 Z6-Z6 OMFRZ 1700 L1546 | PTO BO7 Z6-Z6 OMFRZ 1700 L1546 | CARDAN | GELENKWELLE | |
| 21 | F03260016 | OLIO AGIP BLASIA 150 | OIL AGIP BLASIA 150 | | | |
| 22 | B03600092 | CAR BO7 Z6-Z6 OMCAM 2500 L1589 | PTO BO7 Z6-Z6 OMCAM 2500 L1589 | CARDAN | TRAKTOR KARDAN BYPY656 | |
| 23 | B01300126 | SPES. 40 48 1 ZINC.ST_013 | SHIM | ENTRETOISE | DISTANZSTUECK 40 408 1 | |
| 24 | B01300151 | SPES. 40 48 2 ZINCATO | SHIM | ENTRETOISE | DISTANZSTUECK 40 48 2 | |
| 25 | B03600087 | CAR BO7 Z6-Z6 OMBUL 2900 L1510 | PTO BO7 Z6-Z6 OMBUL 2900 L1510 | CARDAN | GELENKWELLE | |
| 26 | B03600093 | CAR BO7 Z6-Z6 OMCAM 2900 L1589 | PTO BO7 Z6-Z6 OMCAM 2900 L1589 | CARDAN | GELENKWELLE | |
| 27 | B01300151 | SPES. 40 48 2 ZINCATO | SHIM | ENTRETOISE | DISTANZSTUECK 40 48 2 | |
| 28 | B01300125 | SPES. 40 48 0,5 ZINCATO | SHIM GALV | ENTRETOISE GALV | DISTANZSTUECK 40 48 0,5 | |

# TAV_045

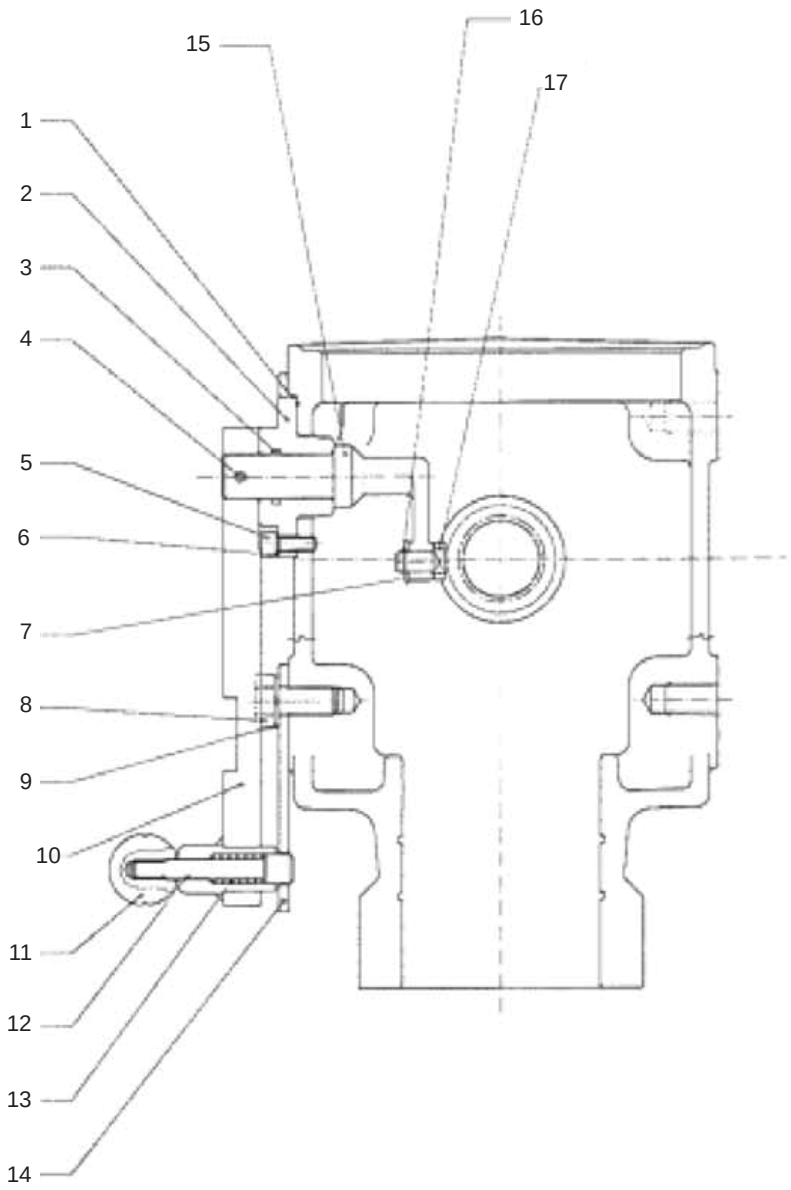
1
2
3
4
5
6
7
8
9
10
11
12
13
14
15
16
17

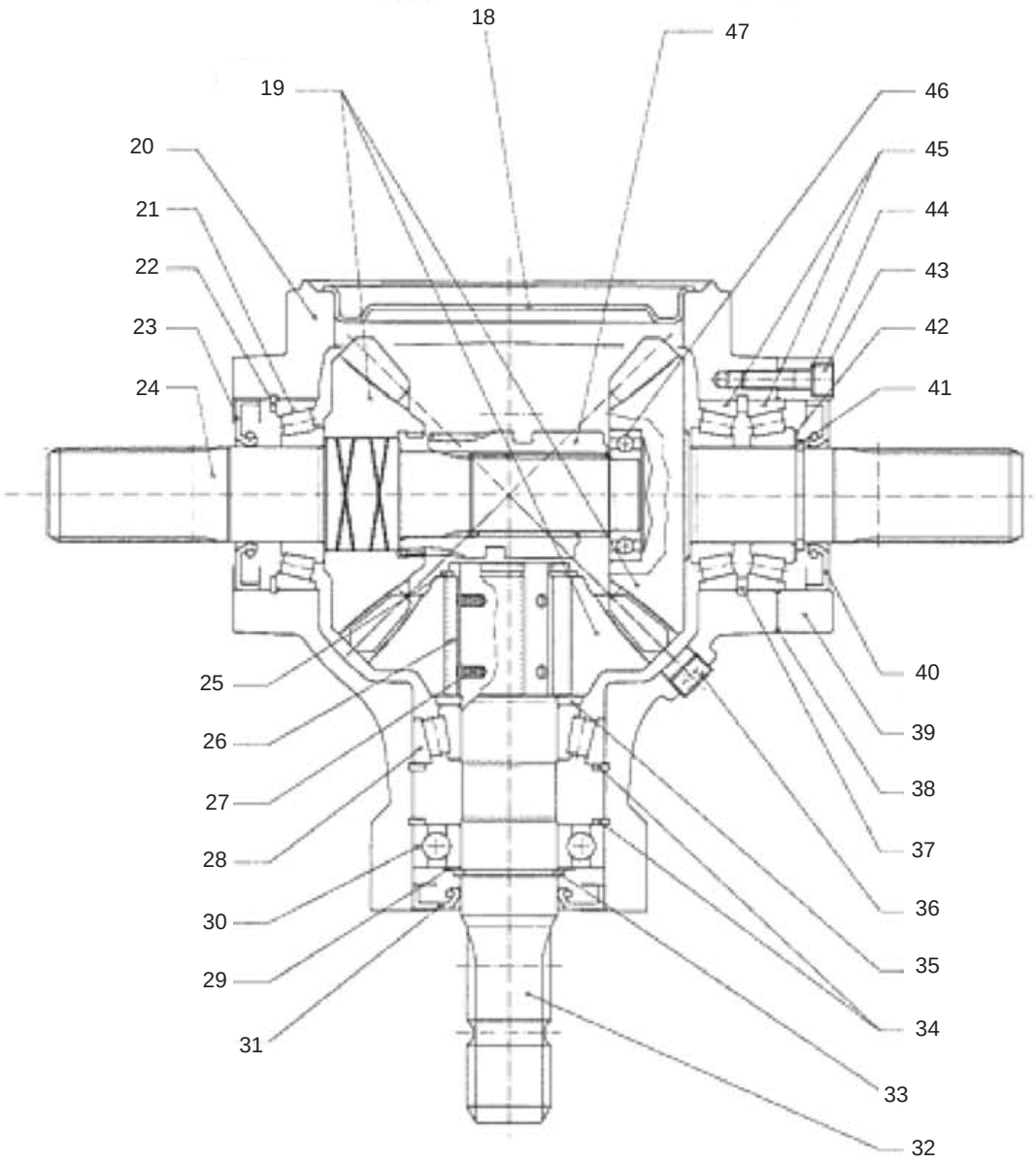
18
19
20
21
22
23
24
25
26
27
28
30
29
31
32
33
34
35
36
37
38
39
40
41
42
43
44
45
46
47

# ESPLOSO SCATOLA DI TRASMISSIONE
## *GEAR BOX PARTS*

TAV_045

| Pos. | Cod. | Descrizione | Description | Description | Benennung | Descripcion |
|---|---|---|---|---|---|---|
| 1 | B0R000284 | GUARNIZIONE 35X65X0,2 | PACKING 35X65X0,2 | JOINT 35X65X0,2 | DICHTUNG 35X65X0,2 | |
| 2 | B0R000283 | SUPP. LEVA | LEVER SUPPORT | SUPPORT LEVIER | HEBELTRAGER | |
| 3 | B0R000300 | ANELLO TORICO OR 123 | OR RING 123 | BAGUE TORIQUE OR 123 | OR RING 123 | |
| 4 | F02100090 | SPINA E.P. 5X 40 U6873 C70 BR | ELASTIC PIN 5X40 | GOUJON ELASTIQUE 5X40 | SPANNHUELSE 5X40 | ESPINA ELASTICA 5X40 |
| 5 | B0R000292 | VITE TCEI M 6X 16-12.9 | SCREW TCEI M 6X 16-12.9 | VIS TCEI M 6X16-12.9 | SCHRAUBE TCEI M6X16-12.9 | |
| 6 | B0R000295 | RONDELLA SICUR.D=6 SCHNORR | LOCK WASHER D=6 SCHNORR | RONDELLE SECURETE D=6 SCHNORR | BEILAGSSCHEIBE D=6 | |
| 7 | B0R000293 | RONDELLA PIANA D=8 UNI6592 | PLAIN WASHER D=8 UNI6592 | RONDELLE PLANE D=8 UNI6592 | BEILAGSSCHEIBE PLATTE D-8 | |
| 8 | F01020508 | VITE M12X1,75X 25 U5739 8.8ZN | SCREW | VIS | SCHRAUBE | |
| 9 | B0R000294 | RONDELLA ELAST.D=12 DIN128B | SPRING WASHER D=12 DIN128B | RONDELLE ELASTIQUE D=12 DIN128 | ELASTICHER BEILAGSSCHEIBE D=12 | |
| 10 | B0R001073 | LEVA EST. INVERTITORE | LEVER REVERSE EXTERNAL | | | |
| 11 | B0R000302 | IMPUGNATURA A SFERA | BALL HANDLE | BRANCHE A SPHERE | KUGELGRIFF | |
| 12 | B0R001074 | PERNO | PIN | | | |
| 13 | B0R000301 | MOLLA DM 9,8X1,2X25 | SPRING DM 9,81X1,2X25 | RESSORT DM 9,8X1,2X25 | FEDER DM9,8X1,2X25 | |
| 14 | B0R000281 | SELETTORE DISINNESTO | SELECTOR DISENGAGEMENT | SELECTEUR DEBRAYAGE | AUSLOSUNGSANWAHLER | |
| 15 | B0R000282 | LEVA COM. DISINNESTO | LEVER RELEASE | LEVIER COM. DEBRAYAGE | AUSLOSERHEBEL | |
| 16 | B0R000297 | ANELLO ELASTICO 8-E SP=0,8 | RETAINING RING 8-E SP=0,8 | BAGUE RESSORT 8-E SP=0,8 | RING EL. 8-E | |
| 17 | B0R000290 | PATTINO | SLIDING BLOCK | CALE | SCHUH | |
| 18 | B0R000288 | COPERCHIO D=145 | COVER D=145 | COUVERCLE D=145 | DECKEL D=145 | |
| 19 | B0R000303 | TERNA CONICA R=1.1 | BEVEL GEAR TRIAL R=1.1 | TERNE CONIQUE R=1,1 | TRIPPELZAHNRAD R=1.1 | |
| 20 | B0R000277 | SCATOLA 2070 | BOX 2070 | | | |
| 21 | B02124019 | CUSC. 30208 CAT.A-ST004 | BEARING | ROULEMENT | LAGER | |
| 22 | B0R000256 | ANELLO ELASTICO 80-I SP=2,5 | ELASTIC RING 80-I SP=2,5 | BAGUE RESSORT 80-I SP=2,5 | ELASTISCHER RING | |
| 23 | F03010277 | ANELLO T.AS 40X 80X10 D3760NBR | OIL SEAL 40X80X10 NBR | BOURAGE 40X80X10 NBR | OELABDICHTUNG 40X80X10 NBR | JUNTA DE ACEITE 40X80X10 NBR |
| 24 | B0R000279 | ALBERO ASSE XY | AXIS SHAFT | ARBRE AXE XY | ACHSWELLE | |
| 25 | B0R000298 | ANELLO ELASTICO 50-E SP=2,0 | RETAINING RING 50-E SP=2,0 | BAGUE RESSORT 50-E SP=0,8 | RING EL. 50-E | |
| 26 | B0R000289 | PIASTRINA RL | RL PLATE | PLAQUE RL | SCHEIBE RL | |
| 27 | B0R000089 | MOLLA CONF DA 08 PZ | SPRING | RESSORT | FEDER | |
| 28 | B02124024 | CUSC. 32208 CAT.A-ST004 | BEARING | ROULEMENT | LAGER | |
| 29 | B02004018 | CUSCINETTO 6208 CAT.A-ST004 | BEARING | ROULEMENT | LAGER | |
| 30 | B0R001071 | ANELLO SPESSORE 40,2X54,8X0,2 | RING THICKNESS 40,2X54,8X0,2 | | | |
| 31 | F03010277 | ANELLO T.AS 40X 80X10 D3760NBR | OIL SEAL 40X80X10 NBR | BOURAGE 40X80X10 NBR | OELABDICHTUNG 40X80X10 NBR | JUNTA DE ACEITE 40X80X10 NBR |
| 32 | B0R000278 | ALBERO ASSE Z R.L. | AXIS SHAFT | ARBRE AXE Z R.L. | ACHSWELLE | |
| 33 | B0R000257 | ANELLO ELASTICO 40-E SP=2,5 | ELASTIC RING 40-E SP=2,5 | BAGUE RESSORT 40-E SP=2,5 | ELASTISCHER RING | |
| 34 | B0R000256 | ANELLO ELASTICO 80-I SP=2,5 | ELASTIC RING 80-I SP=2,5 | BAGUE RESSORT 80-I SP=2,5 | ELASTISCHER RING | |
| 35 | B0R000285 | DISTANZIALE | SPACER | ENTRETOISE | DISTANZSTUECK | |
| 36 | B0R000175 | TAPPO 3 8 GAS-C DIN 906 | PLUG | BOUCHON 3 8 GAS-C DIN 906 | VERSCHLUSS DECKER 3 8 GAS-C | |
| 37 | B0R000299 | ANELLO ELASTICO 80-I SP=4,0 | RETAINING RING 80-I SP=4,0 | BAGUE RESSORT 80-I SP=4,0 | RING EL. 80-I | |
| 38 | B0R000287 | GUARNIZIONE 80X115X0,3 | PACKING 80X115X0,3 | JOINT 80X115X0,3 | DICHTUNG 80X115X0,3 | |
| 39 | B0R001070 | DISTANZIALE PORTA ANELLO | SPACER | | | |
| 40 | F03010277 | ANELLO T.AS 40X 80X10 D3760NBR | OIL SEAL 40X80X10 NBR | BOURAGE 40X80X10 NBR | OELABDICHTUNG 40X80X10 NBR | JUNTA DE ACEITE 40X80X10 NBR |
| 41 | B0R000257 | ANELLO ELASTICO 40-E SP=2,5 | ELASTIC RING 40-E SP=2,5 | BAGUE RESSORT 40-E SP=2,5 | ELASTISCHER RING | |
| 42 | B0R001071 | ANELLO SPESSORE 40,2X54,8X0,2 | RING THICKNESS 40,2X54,8X0,2 | | | |
| 43 | F01040097 | VITE M8X1,25X30 U5931 8.8ZN | SCR. M8X1,25X30 U5931 8.8ZN | | | |
| 44 | B0R000296 | RONDELLA SICUR.D=8 SCHNORR | LOCK WASHER D=8 SCHNORR | RONDELLE SECURETE D=8 SCHNORR | BEILAGSSCHEIBE D=8 | |
| 45 | B02124019 | CUSC. 30208 CAT.A-ST004 | BEARING | ROULEMENT | LAGER | |
| 46 | B02003013 | CUSCINETTO 6006 CAT.B-ST004 | BEARING | ROULEMENT | LAGER | |
| 47 | B0R000276 | MANICOTTO PER DISINNESTO | COUPLING FOR DISENGAGEMENT | MANCHON POUR DECLENCHEMENT | HUELSE FUER AUSKUPPLUNG | |

# TAV_350

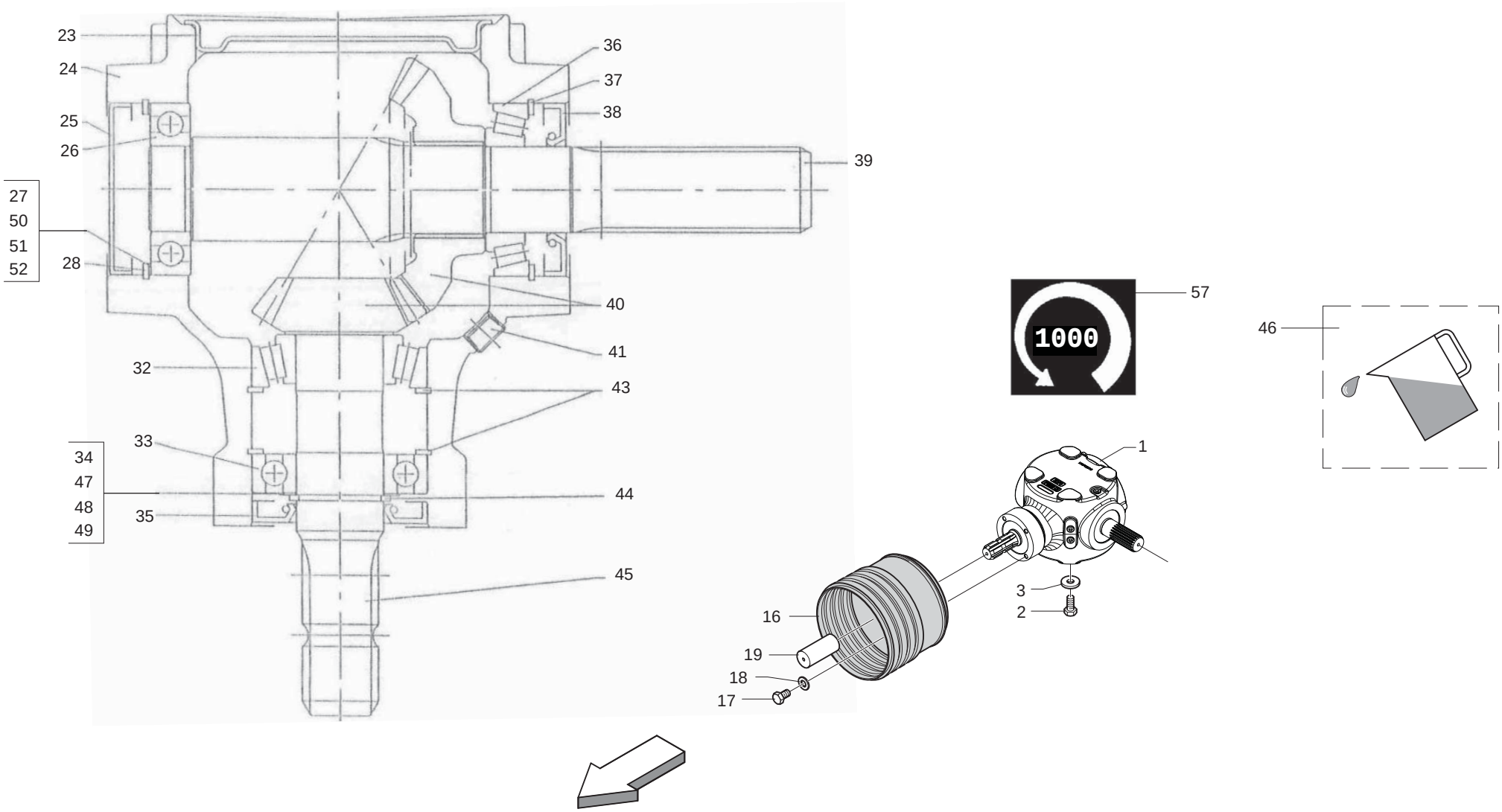
23
24
25
26
27
50
51
52
28
36
37
38
39
40
41
32
43
33
34
47
48
49
35
44
45
1000
57
46
1
3
2
16
19
18
17

# SCATOLA DI TRASMISSIONE 1000 g/1'
## *GEAR BOX 1000 rpm*

TAV_350

| Pos. | Cod. | Descrizione | Description | Description | Benennung | Descripcion |
|---|---|---|---|---|---|---|
| 1 | B03900156 | SCATOLA BYPY 2070-1,92 1 | GEAR BOX | BOITE | GETRIEBE BYPY 1000U MIN | |
| 2 | F01020540 | VITE M14X2X30 U5739 8.8ZN | SCR. M14X2X30 U5739 8.8ZN | VIS M14X2X30 U5739 8.8ZN | SCHRAUBE M14X2X30 U5739 8.8ZN | TORNILLO M14X2X30 U5739 8.8ZN |
| 3 | B01516040 | RALLA 15 42 6 | FIFTH WHEEL | BUTEE | SCHEIBE | |
| 16 | B07V00076 | CONTROCUFFIA CPLTA SFT 3950 | COMPLETE COUNTER-HOUSING | CONTRE-BOL COMPLETE SFT-BYPY | GEGENHAUBE | |
| 17 | F01020468 | VITE M10X1,5X16 U5739 8.8ZN | SCR. M10X1,5X16 U5739 8.8ZN | RONDELLE M10X1,5 X 16 | DUEBEL M10X1,5 X 16 | TORNILLO M10X1,5 X 16 |
| 18 | F01410064 | ROS.M10 10,5X 18X 2 U6592 ZN | WASHER | RONDELLE | SCHEIBE | |
| 19 | G19002131 | PROTEZIONE P.D.P. | PDP GUARD | | | |
| 23 | B0R000979 | COPERCHIO DI CHIUSURA SCATOLA | COPERCHIO DI CHIUSURA SCATOLA. | | | |
| 24 | B0R000978 | CORPO SCATOLA 2070 | BOX 2070 | | | |
| 25 | B0R000090 | CAPPELLOTTO 80X10 | SEAL 80X10 | CAPOUCHON 80X10 | KAPPE 80X10 | |
| 26 | B02004018 | CUSCINETTO 6208 CAT.A-ST004 | BEARING | ROULEMENT | LAGER | |
| 27 | B0R000262 | ANELLO SPES. 69,3X79,7X0,2 | SHIM RING 69,3X79,7X0,2 | BAGUE EPAISSEUR 69,3X79,7X0,2 | RING 69,3X79,7X0,2 | |
| 28 | B0R000256 | ANELLO ELASTICO 80-I SP=2,5 | ELASTIC RING 80-I SP=2,5 | BAGUE RESSORT 80-I SP=2,5 | ELASTISCHER RING | |
| 32 | B02124024 | CUSC. 32208 CAT.A-ST004 | BEARING | ROULEMENT | LAGER | |
| 33 | B02004018 | CUSCINETTO 6208 CAT.A-ST004 | BEARING | ROULEMENT | LAGER | |
| 34 | B0R000258 | ANELLO SPES. 40,2X54,8X0,2 | SHIM RING 40,2X54,8X0,2 | BAGUE EPAISSEUR 40,2X54,8X0,2 | ELASTISCHER RING | |
| 35 | F03010277 | ANELLO T.AS 40X 80X10 D3760NBR | OIL SEAL 40X80X10 NBR | BOURAGE 40X80X10 NBR | OELABDICHTUNG 40X80X10 NBR | JUNTA DE ACEITE 40X80X10 NBR |
| 36 | B02124019 | CUSC. 30208 CAT.A-ST004 | BEARING | ROULEMENT | LAGER | |
| 37 | B0R000256 | ANELLO ELASTICO 80-I SP=2,5 | ELASTIC RING 80-I SP=2,5 | BAGUE RESSORT 80-I SP=2,5 | ELASTISCHER RING | |
| 38 | F03010277 | ANELLO T.AS 40X 80X10 D3760NBR | OIL SEAL 40X80X10 NBR | BOURAGE 40X80X10 NBR | OELABDICHTUNG 40X80X10 NBR | JUNTA DE ACEITE 40X80X10 NBR |
| 39 | B0R000977 | ALB. XY R 207040X36 DIN 5482 | R XY SHAFT 2070 40X36 DIN548 | ARBRE XY R 2070 40X36 DIN 54 | WELLE | |
| 40 | B0R000976 | COPPIA CONICA R1.92 M6 X 2070 | BEVEL GEAR PAIR R=1,92 M=6 FOR | COUPLE CONIQUE R=1.92 M=6 | KEGELRADPAAR | |
| 41 | B0R000175 | TAPPO 3 8 GAS-C DIN 906 | PLUG | BOUCHON 3 8 GAS-C DIN 906 | VERSCHLUSS DECKER 3 8 GAS-C | |
| 43 | B0R000256 | ANELLO ELASTICO 80-I SP=2,5 | ELASTIC RING 80-I SP=2,5 | BAGUE RESSORT 80-I SP=2,5 | ELASTISCHER RING | |
| 44 | B0R000257 | ANELLO ELASTICO 40-E SP=2,5 | ELASTIC RING 40-E SP=2,5 | BAGUE RESSORT 40-E SP=2,5 | ELASTISCHER RING | |
| 45 | B0R000306 | ALBERO ASSE Z R.L. | AXLE SHAFT Z R.L. | ARBRE AXE Z RL | ACHSWELLE Z R.L. | |
| 46 | F03260016 | OLIO AGIP BLASIA 150 | OIL AGIP BLASIA 150 | | | |
| 47 | B0R000259 | ANELLO SPES. 40,2X54,8X0,3 | SHIM RING 40,2X54,8X0,3 | BAGUE EPAISSEUR 40,2X54,8X0,3 | ELASTISCHER RING | |
| 48 | B0R000260 | ANELLO SPES. 40,2X54,8X0,4 | SHIM RING 40,2X54,8X0,4 | BAGUE EPAISSEUR 40,2X54,8X0,4 | DISTANZRING 40,2X54,8X0,4 | |
| 49 | B0R000261 | ANELLO SPES. 40,2X54,8X0,1 | SHIM RING 40,2X54,8X0,1 | BAGUE EPAISSEUR 40,2X54,8X0,1 | DISTANZRING 40,2X54,8X0,1 | |
| 50 | B0R000263 | ANELLO SPES. 69,3X79,7X0,3 | SHIM RING 69,3X79,7X0,3 | BAGUE EPAISSEUR 69,3X79,7X0,3 | SCHEIBE 69,3X79,7X0,3 | |
| 51 | B0R000264 | ANELLO SPES. 69,3X79,7X0,4 | SHIM RING 69,3X79,7X0,4 | BAGUE EPAISSEUR 69,3X79,7X0,4 | DISTANZRING 69,3X79,7X0,4 | |
| 52 | B0R000265 | ANEL SPES. 69,3X79,7X0,1 34006 | SHIM RING 69,3X79,7X0,1 34006 | BAGUE EPAISSEUR 69,3X79,7X0,1 | RING 69,3X79,7X0,1 | |
| 57 | B07500188 | ET 1000 GIRI - RICC SX NORM | DECAL 1000 RPM - LEFT BURR | DECAL 1000 T H-SENS DE ROTATI | AUFKLEBE 1000 RPM | |

TAV_050

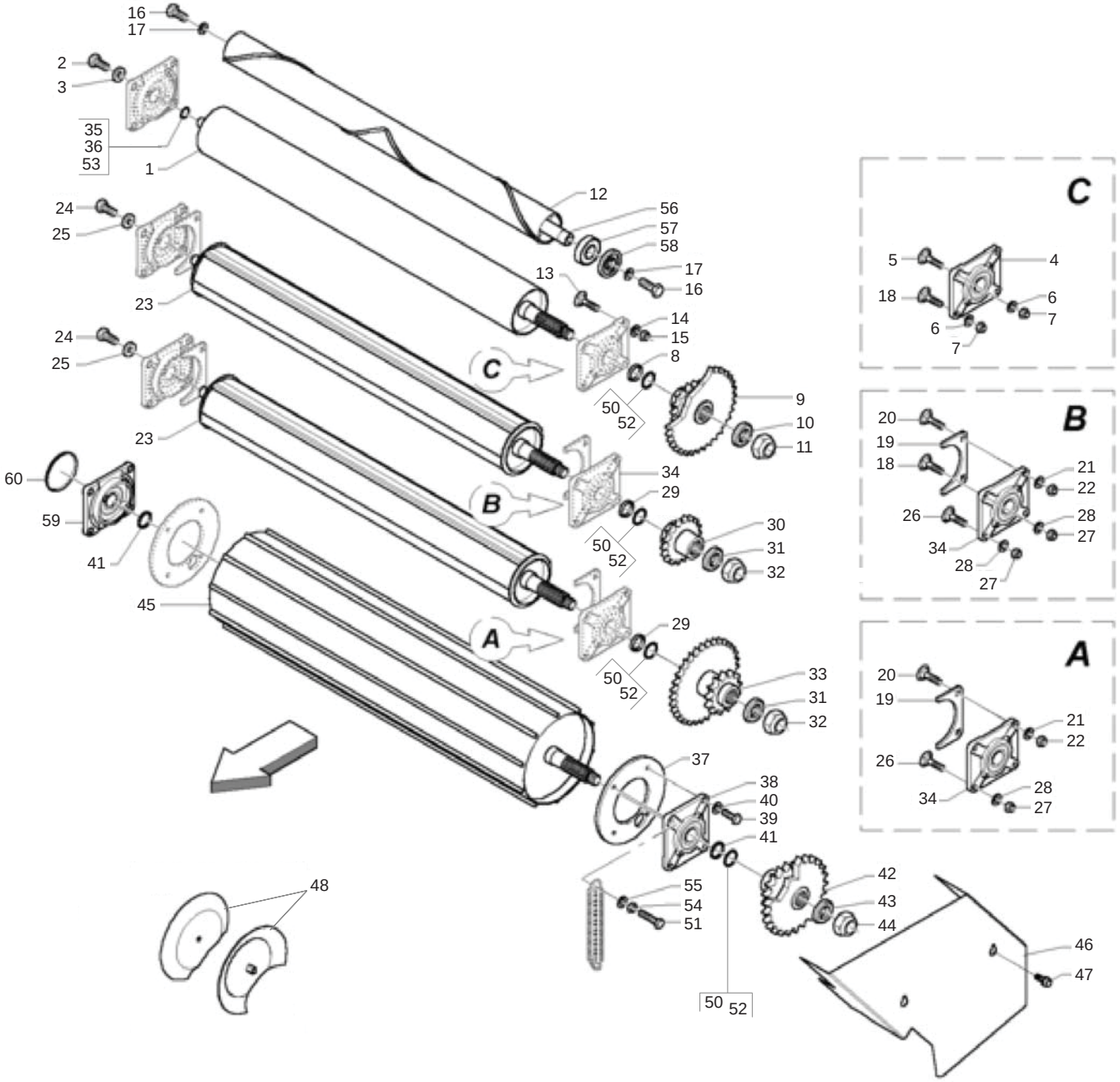




MASCHIO

# RULLI
## *ROLLERS*

TAV_050

| Pos. | Cod. | Descrizione | Description | Description | Benennung | Descripcion |
|---|---|---|---|---|---|---|
| 1 | B07S00942 | RULLO MOT. INFERIORE NL | LOWER MOTOR ROLLER | ROULEAU MOTEUR INFERIEUR | UNTERE MOTORWALZE | |
| 2 | F01020564 | VITE M16X2X35 U5739 8.8ZN | SCR. M16X2X35 U5739 8.8ZN | VIS M 16X35 | SCHRAUBE M 16X35 | TORNILLO M 16X35 |
| 3 | B01515091 | RALLA 17 52 6 | FIFTH WHEEL | BUTEE | SCHEIBE | |
| 4 | B02700051 | SUPPORTO FLANGIATO | FLANGED SUPPORT | SUPPORT EMBOUTI | FLANSCHLAGER | |
| 5 | B00523421 | VITE SPECIALE TTQST M12X35-8.8 | SPECIAL SCREW | VIS SPCIALE | SCHRAUBE TTQST M12X 35-8.8 | |
| 6 | F01410076 | ROS.M12 13X 20X2,0 U1749 ZN | WASHER | RONDELLE | SCHEIBE | |
| 7 | B00920412 | DADO M12X1,75 D985 8 ZN | NUT | ECROU | SELBSTSICHERNDE MUTTER M12-5S | |
| 8 | B01300845 | DISTANZIALE 40X50X4 | SPACER | ENTRETOISE | DISTANZSCHEIBE 40X50X4 | |
| 9 | B03400287 | INGR. Z=26 10; 1, 1; ISO 16B-1 | SMOOTH ROLLER GEAR Z=23-10 1 | ENGRANAGE | ZAHNRAD Z=23-10 1 | |
| 10 | B014R3050 | ROSETTA 30 UNI 5714-69 E DEIDR | WASHER | RONDELLE | BEILAGSSCHEIBE | |
| 11 | F01230291 | DADO M30X 2 D985 ZN | NUT | ECROU | SELBSTSICHERNDE MUTTER M30X2-5 | |
| 12 | B07SP0293 | RULLO PULITORE | CLEANER ROLLER | ROULEAU POLISSEUS | REININGUNGSWALZE | |
| 13 | B00523395 | VITE SPECIALE TTQST M12X45-8.8 | SPECIAL SCREW | VIS SPECIALE | SCHRAUBE TTQST M12X 45-8.8 | |
| 14 | F01410076 | ROS.M12 13X 20X2,0 U1749 ZN | WASHER | RONDELLE | SCHEIBE | |
| 15 | B00920412 | DADO M12X1,75 D985 8 ZN | NUT | ECROU | SELBSTSICHERNDE MUTTER M12-5S | |
| 16 | B00191680 | VITE M16X 2X 80 U5737 8.8ZN | SCREW | VIS | SCHRAUBE | |
| 17 | F01410100 | ROS.M16 17X 30X 3 U6592 ZN | WASHER | RONDELLE | SCHEIBE | |
| 18 | B005C0002 | VITE TTQST 12X35-8.8 TORNITA | SCREW | VIS | SCHRAUBE | |
| 19 | B0C6P0003 | RIPARO RULLI ALETTATI | ROLLERS GUARD | PROTECTION ROULEAUX | SCHUETZ WALZEN | |
| 20 | B00523395 | VITE SPECIALE TTQST M12X45-8.8 | SPECIAL SCREW | VIS SPECIALE | SCHRAUBE TTQST M12X 45-8.8 | |
| 21 | F01410076 | ROS.M12 13X 20X2,0 U1749 ZN | WASHER | RONDELLE | SCHEIBE | |
| 22 | B00920412 | DADO M12X1,75 D985 8 ZN | NUT | ECROU | SELBSTSICHERNDE MUTTER M12-5S | |
| 23 | B07SP0062 | RULLO LT | LT ROLLER | ROULEAU LT | WALZE LT | |
| 24 | F01020564 | VITE M16X2X35 U5739 8.8ZN | SCR. M16X2X35 U5739 8.8ZN | VIS M 16X35 | SCHRAUBE M 16X35 | TORNILLO M 16X35 |
| 25 | B01515091 | RALLA 17 52 6 | FIFTH WHEEL | BUTEE | SCHEIBE | |
| 26 | B00523421 | VITE SPECIALE TTQST M12X35-8.8 | SPECIAL SCREW | VIS SPCIALE | SCHRAUBE TTQST M12X 35-8.8 | |
| 27 | B00920412 | DADO M12X1,75 D985 8 ZN | NUT | ECROU | SELBSTSICHERNDE MUTTER M12-5S | |
| 28 | F01410076 | ROS.M12 13X 20X2,0 U1749 ZN | WASHER | RONDELLE | SCHEIBE | |
| 29 | B01300845 | DISTANZIALE 40X50X4 | SPACER | ENTRETOISE | DISTANZSCHEIBE 40X50X4 | |
| 30 | B03400235 | INGRANAGGIO Z=11-1 | GEAR Z=11-1 | ENGRENAGE | ZAHNRAD Z=11-1 | |
| 31 | B014R3050 | ROSETTA 30 UNI 5714-69 E DEIDR | WASHER | RONDELLE | BEILAGSSCHEIBE | |
| 32 | F01230291 | DADO M30X 2 D985 ZN | NUT | ECROU | SELBSTSICHERNDE MUTTER M30X2-5 | |
| 33 | B034P0006 | INGR.RULLO BACC.INF.Z=23-12 1 | LOWER GEAR ROLLER Z=23-12 1 | ENGRANAGE ROULEAU INF. Z=23-12 | ZAHNRAD | |
| 34 | B02700051 | SUPPORTO FLANGIATO | FLANGED SUPPORT | SUPPORT EMBOUTI | FLANSCHLAGER | |
| 35 | B01300151 | SPES. 40 48 2 ZINCATO | SHIM | ENTRETOISE | DISTANZSTUECK 40 48 2 | |
| 36 | B01300125 | SPES. 40 48 0,5 ZINCATO | SHIM GALV | ENTRETOISE GALV | DISTANZSTUECK 40 48 0,5 | |
| 37 | B0C003056 | PIASTRA INTERNA RULLO GRANDE | ROLLER INNER PLATE | TOLE INTERIEUR ROULEAU | WALZEN INNENSCHEIBE | |
| 38 | B02700106 | SUPP. FLANG. FILETTATO | THREADED FLANGED SUPPORT | SUPPORT FILETE | HALTER | |
| 39 | F01020512 | VITE M12X1,75X35 U5739 8.8ZN | SCR. M12X1,75X35 U5739 8.8ZN | VIS M12X1,75X35 5739 8.8 ZN | SCHR. M12X1,75X35 5739 8.8 ZN | TORN. M12X1,75X35 5739 8.8 ZN |
| 40 | F01410076 | ROS.M12 13X 20X2,0 U1749 ZN | WASHER | RONDELLE | SCHEIBE | |
| 41 | B01300151 | SPES. 40 48 2 ZINCATO | SHIM | ENTRETOISE | DISTANZSTUECK 40 48 2 | |
| 42 | B03400290 | INGR.RULLO GRANDE Z=16-24 1 | BIG ROLLER GEAR Z=16-24 1 | ENGRANAGE | ZAHNRAD | |
| 43 | B014R3050 | ROSETTA 30 UNI 5714-69 E DEIDR | WASHER | RONDELLE | BEILAGSSCHEIBE | |
| 44 | F01230291 | DADO M30X 2 D985 ZN | NUT | ECROU | SELBSTSICHERNDE MUTTER M30X2-5 | |
| 45 | B07S01841 | RULLO GRANDE NEW | BIG ROLLER | ROUELAU GRAND NEW | GROSSE WALZE | |
| 46 | B0C3P0001G | CARTER | GUARD | | | |
| 47 | B00370001 | VITE TE M 8X16 A SEZ.TRILOBATA | SCREW TRE M 8X16 SEZ TROUBLED | VIS | SCHRAUBE M 8X15 | |
| 48 | B07S01845 | TAZZA RESTRINGIMENTO | CHAMBER TIGHTENING CUPS | TASSE DE RETRECISSEMENT NEW | KAMMERVERENGUNGSTASSEN | |
| 50 | B01300126 | SPES. 40 48 1 ZINC.ST_013 | SHIM | ENTRETOISE | DISTANZSTUECK 40 408 1 | |
| 51 | B00471235 | VITE TTEI M12X 35-8.8 UNBRA | SCREW | VIS | SCHRAUBE TTEI M12X35-8.8 | |
| 52 | B01300126 | SPES. 40 48 1 ZINC.ST_013 | SHIM | ENTRETOISE | DISTANZSTUECK 40 408 1 | |
| 53 | B01300125 | SPES. 40 48 0,5 ZINCATO | SHIM GALV | ENTRETOISE GALV | DISTANZSTUECK 40 48 0,5 | |
| 54 | F01200293 | DADO M12X1,75 U5588 CL8 ZN | NUT M12X1,75 U5588 6S ZN | ECROU M12X1,75 U5588 6S ZN | MUTTER M12X1,75 U5588 6S ZN | TUERCA M12X1,75 U5588 6S ZN |
| 55 | F01410076 | ROS.M12 13X 20X2,0 U1749 ZN | WASHER | RONDELLE | SCHEIBE | |
| 56 | B03500214 | ALBERO LUNGO | LONG SHAFT | ARBRE LONG | LANGE WELLE | |
| 57 | B02043517 | CUSC.. 6207-2RS CAT.B-ST004 | BEARING | ROULEMENT | LAGER 6207-2RS | |
| 58 | B013P0150 | CHIUSURA RULLI PULITORE | ROLLER LOCK | FERMETURE ROULEAUX | WALZEN VERSCHLUSS | |

TAV_050

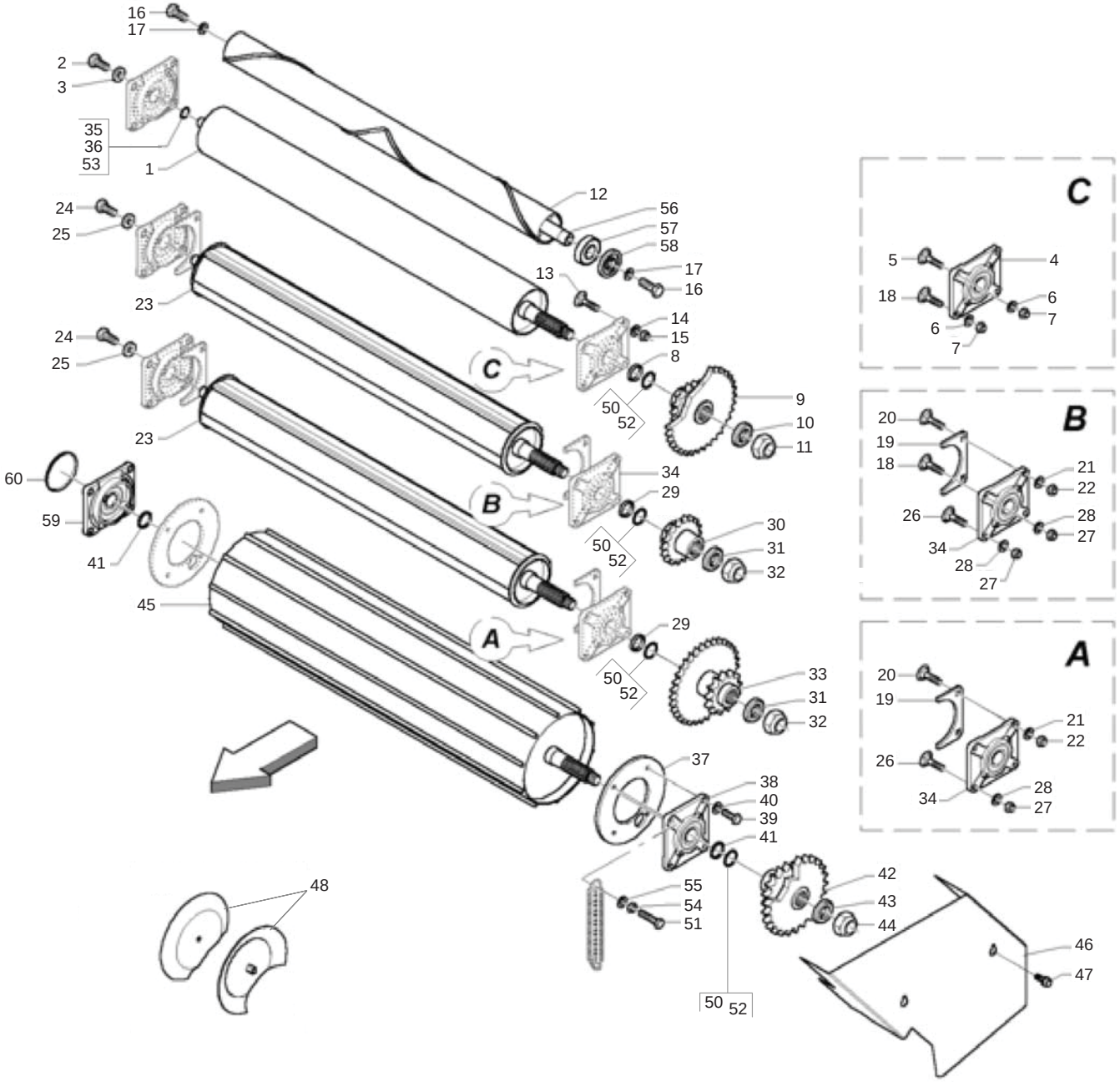




MASCHIO

# RULLI
## *ROLLERS*

TAV_050

| Pos. | Cod. | Descrizione | Description | Description | Benennung | Descripcion |
|---|---|---|---|---|---|---|
| 59 | B02700153 | SUPPORTO FLANGIATO | FLANGED SUPPORT | SUPPORT POUR ROTOR CUT | FLANSCHLAGER | |
| 60 | B04400001 | CAP. CHIUSO 110X10 TIPO C | CAP | COUVERCLE | GESCHLOSSENE KAPPE | |

# TAV_055

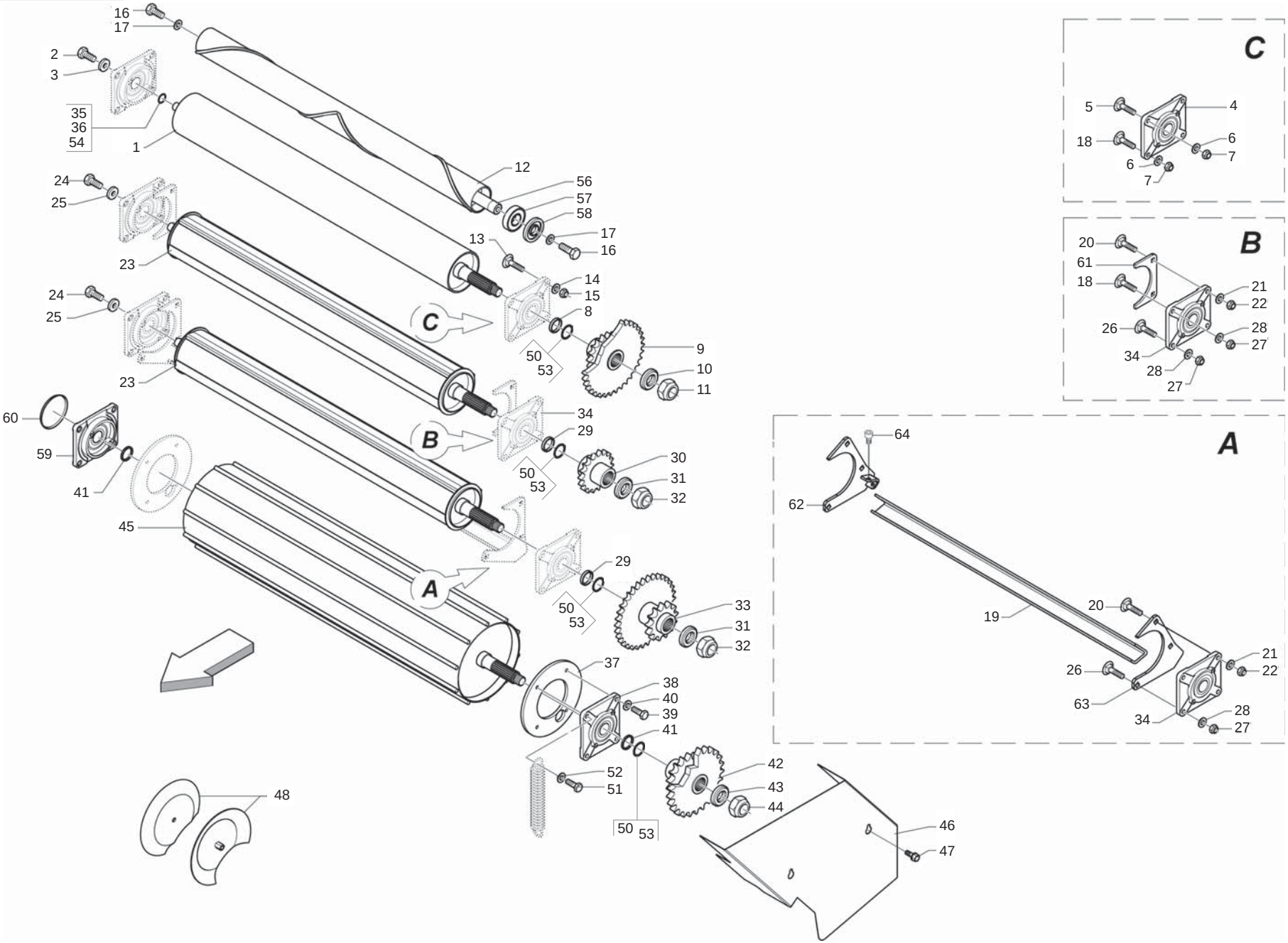




MASCHIO

cod. F07022223

# RULLI CUT
## *ROLLERS CUT*

TAV_055

| Pos. | Cod. | Descrizione | Description | Description | Benennung | Descripcion |
|---|---|---|---|---|---|---|
| 1 | B07S00942 | RULLO MOT. INFERIORE NL | LOWER MOTOR ROLLER | ROULEAU MOTEUR INFERIEUR | UNTERE MOTORWALZE | |
| 2 | F01020564 | VITE M16X2X35 U5739 8.8ZN | SCR. M16X2X35 U5739 8.8ZN | VIS M 16X35 | SCHRAUBE M 16X35 | TORNILLO M 16X35 |
| 3 | B01515091 | RALLA 17 52 6 | FIFTH WHEEL | BUTEE | SCHEIBE | |
| 4 | B02700051 | SUPPORTO FLANGIATO | FLANGED SUPPORT | SUPPORT EMBOUTI | FLANSCHLAGER | |
| 5 | B00523421 | VITE SPECIALE TTQST M12X35-8.8 | SPECIAL SCREW | VIS SPCIALE | SCHRAUBE TTQST M12X 35-8.8 | |
| 6 | F01410076 | ROS.M12 13X 20X2,0 U1749 ZN | WASHER | RONDELLE | SCHEIBE | |
| 7 | B00920412 | DADO M12X1,75 D985 8 ZN | NUT | ECROU | SELBSTSICHERNDE MUTTER M12-5S | |
| 8 | B01300845 | DISTANZIALE 40X50X4 | SPACER | ENTRETOISE | DISTANZSCHEIBE 40X50X4 | |
| 9 | B03400287 | INGR. Z=26 10; 1, 1; ISO 16B-1 | SMOOTH ROLLER GEAR Z=23-10 1 | ENGRANAGE | ZAHNRAD Z=23-10 1 | |
| 10 | B014R3050 | ROSETTA 30 UNI 5714-69 E DEIDR | WASHER | RONDELLE | BEILAGSSCHEIBE | |
| 11 | F01230291 | DADO M30X 2 D985 ZN | NUT | ECROU | SELBSTSICHERNDE MUTTER M30X2-5 | |
| 12 | B07SP0293 | RULLO PULITORE | CLEANER ROLLER | ROULEAU POLISSEUS | REININGUNGSWALZE | |
| 13 | B00523395 | VITE SPECIALE TTQST M12X45-8.8 | SPECIAL SCREW | VIS SPECIALE | SCHRAUBE TTQST M12X 45-8.8 | |
| 14 | F01410076 | ROS.M12 13X 20X2,0 U1749 ZN | WASHER | RONDELLE | SCHEIBE | |
| 15 | B00920412 | DADO M12X1,75 D985 8 ZN | NUT | ECROU | SELBSTSICHERNDE MUTTER M12-5S | |
| 16 | B00191680 | VITE M16X 2X 80 U5737 8.8ZN | SCREW | VIS | SCHRAUBE | |
| 17 | F01410100 | ROS.M16 17X 30X 3 U6592 ZN | WASHER | RONDELLE | SCHEIBE | |
| 18 | B005C0002 | VITE TTQST 12X35-8.8 TORNITA | SCREW | VIS | SCHRAUBE | |
| 19 | B0C1P0218 | CORPO TRAVERSA | CROSSBAR FRAME | | | |
| 20 | B00523395 | VITE SPECIALE TTQST M12X45-8.8 | SPECIAL SCREW | VIS SPECIALE | SCHRAUBE TTQST M12X 45-8.8 | |
| 21 | F01410076 | ROS.M12 13X 20X2,0 U1749 ZN | WASHER | RONDELLE | SCHEIBE | |
| 22 | B00920412 | DADO M12X1,75 D985 8 ZN | NUT | ECROU | SELBSTSICHERNDE MUTTER M12-5S | |
| 23 | B07SP0062 | RULLO LT | LT ROLLER | ROULEAU LT | WALZE LT | |
| 24 | F01020564 | VITE M16X2X35 U5739 8.8ZN | SCR. M16X2X35 U5739 8.8ZN | VIS M 16X35 | SCHRAUBE M 16X35 | TORNILLO M 16X35 |
| 25 | B01515091 | RALLA 17 52 6 | FIFTH WHEEL | BUTEE | SCHEIBE | |
| 26 | B00523421 | VITE SPECIALE TTQST M12X35-8.8 | SPECIAL SCREW | VIS SPCIALE | SCHRAUBE TTQST M12X 35-8.8 | |
| 27 | B00920412 | DADO M12X1,75 D985 8 ZN | NUT | ECROU | SELBSTSICHERNDE MUTTER M12-5S | |
| 28 | F01410076 | ROS.M12 13X 20X2,0 U1749 ZN | WASHER | RONDELLE | SCHEIBE | |
| 29 | B01300845 | DISTANZIALE 40X50X4 | SPACER | ENTRETOISE | DISTANZSCHEIBE 40X50X4 | |
| 30 | B03400235 | INGRANAGGIO Z=11-1 | GEAR Z=11-1 | ENGRENAGE | ZAHNRAD Z=11-1 | |
| 31 | B014R3050 | ROSETTA 30 UNI 5714-69 E DEIDR | WASHER | RONDELLE | BEILAGSSCHEIBE | |
| 32 | F01230291 | DADO M30X 2 D985 ZN | NUT | ECROU | SELBSTSICHERNDE MUTTER M30X2-5 | |
| 33 | B034P0006 | INGR.RULLO BACC.INF.Z=23-12 1 | LOWER GEAR ROLLER Z=23-12 1 | ENGRANAGE ROULEAU INF. Z=23-12 | ZAHNRAD | |
| 34 | B02700051 | SUPPORTO FLANGIATO | FLANGED SUPPORT | SUPPORT EMBOUTI | FLANSCHLAGER | |
| 35 | B01300151 | SPES. 40 48 2 ZINCATO | SHIM | ENTRETOISE | DISTANZSTUECK 40 48 2 | |
| 36 | B01300126 | SPES. 40 48 1 ZINC.ST_013 | SHIM | ENTRETOISE | DISTANZSTUECK 40 408 1 | |
| 37 | B0C003056 | PIASTRA INTERNA RULLO GRANDE | ROLLER INNER PLATE | TOLE INTERIEUR ROULEAU | WALZEN INNENSCHEIBE | |
| 38 | B02700106 | SUPP. FLANG. FILETTATO | THREADED FLANGED SUPPORT | SUPPORT FILETE | HALTER | |
| 39 | F01020512 | VITE M12X1,75X35 U5739 8.8ZN | SCR. M12X1,75X35 U5739 8.8ZN | VIS M12X1,75X35 5739 8.8 ZN | SCHR. M12X1,75X35 5739 8.8 ZN | TORN. M12X1,75X35 5739 8.8 ZN |
| 40 | F01410076 | ROS.M12 13X 20X2,0 U1749 ZN | WASHER | RONDELLE | SCHEIBE | |
| 41 | B01300151 | SPES. 40 48 2 ZINCATO | SHIM | ENTRETOISE | DISTANZSTUECK 40 48 2 | |
| 42 | B03400290 | INGR.RULLO GRANDE Z=16-24 1 | BIG ROLLER GEAR Z=16-24 1 | ENGRANAGE | ZAHNRAD | |
| 43 | B014R3050 | ROSETTA 30 UNI 5714-69 E DEIDR | WASHER | RONDELLE | BEILAGSSCHEIBE | |
| 44 | F01230291 | DADO M30X 2 D985 ZN | NUT | ECROU | SELBSTSICHERNDE MUTTER M30X2-5 | |
| 45 | B07S01841 | RULLO GRANDE NEW | BIG ROLLER | ROUELAU GRAND NEW | GROSSE WALZE | |
| 46 | B0C3P0001G | CARTER | GUARD | | | |
| 47 | B00370001 | VITE TE M 8X16 A SEZ.TRILOBATA | SCREW TRE M 8X16 SEZ TROUBLED | VIS | SCHRAUBE M 8X15 | |
| 48 | B07S01845 | TAZZA RESTRINGIMENTO | CHAMBER TIGHTENING CUPS | TASSE DE RETRECISSEMENT NEW | KAMMERVERENGUNGSTASSEN | |
| 50 | B01300125 | SPES. 40 48 0,5 ZINCATO | SHIM GALV | ENTRETOISE GALV | DISTANZSTUECK 40 48 0,5 | |
| 51 | B00471235 | VITE TTEI M12X 35-8.8 UNBRA | SCREW | VIS | SCHRAUBE TTEI M12X35-8.8 | |
| 52 | F01420120 | ROS.M12 13X 36X2,5 U6593 ZN | WASHER | RONDELLE | SCHEIBE | |
| 53 | B01300126 | SPES. 40 48 1 ZINC.ST_013 | SHIM | ENTRETOISE | DISTANZSTUECK 40 408 1 | |
| 54 | B01300125 | SPES. 40 48 0,5 ZINCATO | SHIM GALV | ENTRETOISE GALV | DISTANZSTUECK 40 48 0,5 | |
| 56 | B03500214 | ALBERO LUNGO | LONG SHAFT | ARBRE LONG | LANGE WELLE | |
| 57 | B02043517 | CUSC.. 6207-2RS CAT.B-ST004 | BEARING | ROULEMENT | LAGER 6207-2RS | |
| 58 | B013P0150 | CHIUSURA RULLI PULITORE | ROLLER LOCK | FERMETURE ROULEAUX | WALZEN VERSCHLUSS | |
| 59 | B02700153 | SUPPORTO FLANGIATO | FLANGED SUPPORT | SUPPORT POUR ROTOR CUT | FLANSCHLAGER | |

TAV_055

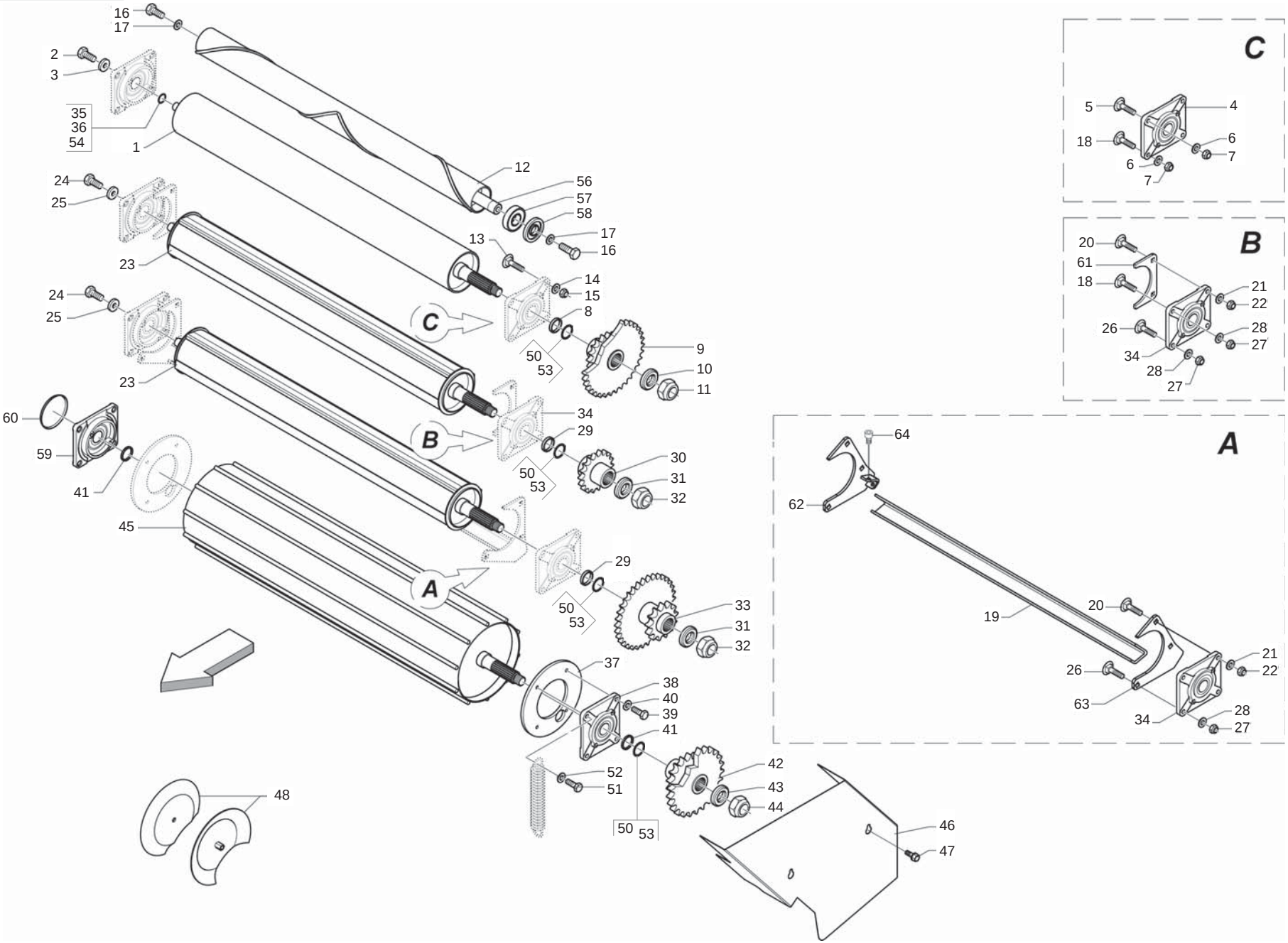




MASCHIO

## RULLI CUT
## *ROLLERS CUT*

TAV_055

| Pos. | Cod. | Descrizione | Description | Description | Benennung | Descripcion |
|---|---|---|---|---|---|---|
| 60 | B04400001 | CAP. CHIUSO 110X10 TIPO C | CAP | COUVERCLE | GESCHLOSSENE KAPPE | |
| 61 | B0C6P0003 | RIPARO RULLI ALETTATI | ROLLERS GUARD | PROTECTION ROULEAUX | SCHUETZ WALZEN | |
| 62 | B07SP0736 | ATTACCO LATERALE DX | RIGHT COUPLING | | | |
| 63 | B07SP0735 | ATTACCO LATERALE SX | LEFT COUPLING | | | |
| 64 | B00471220 | VITE TTEI M12X 20-8.8 UNBRA | SCREW | VIS | SCHRAUBE TTEI M12X 20-8.8 | |

TAV_060

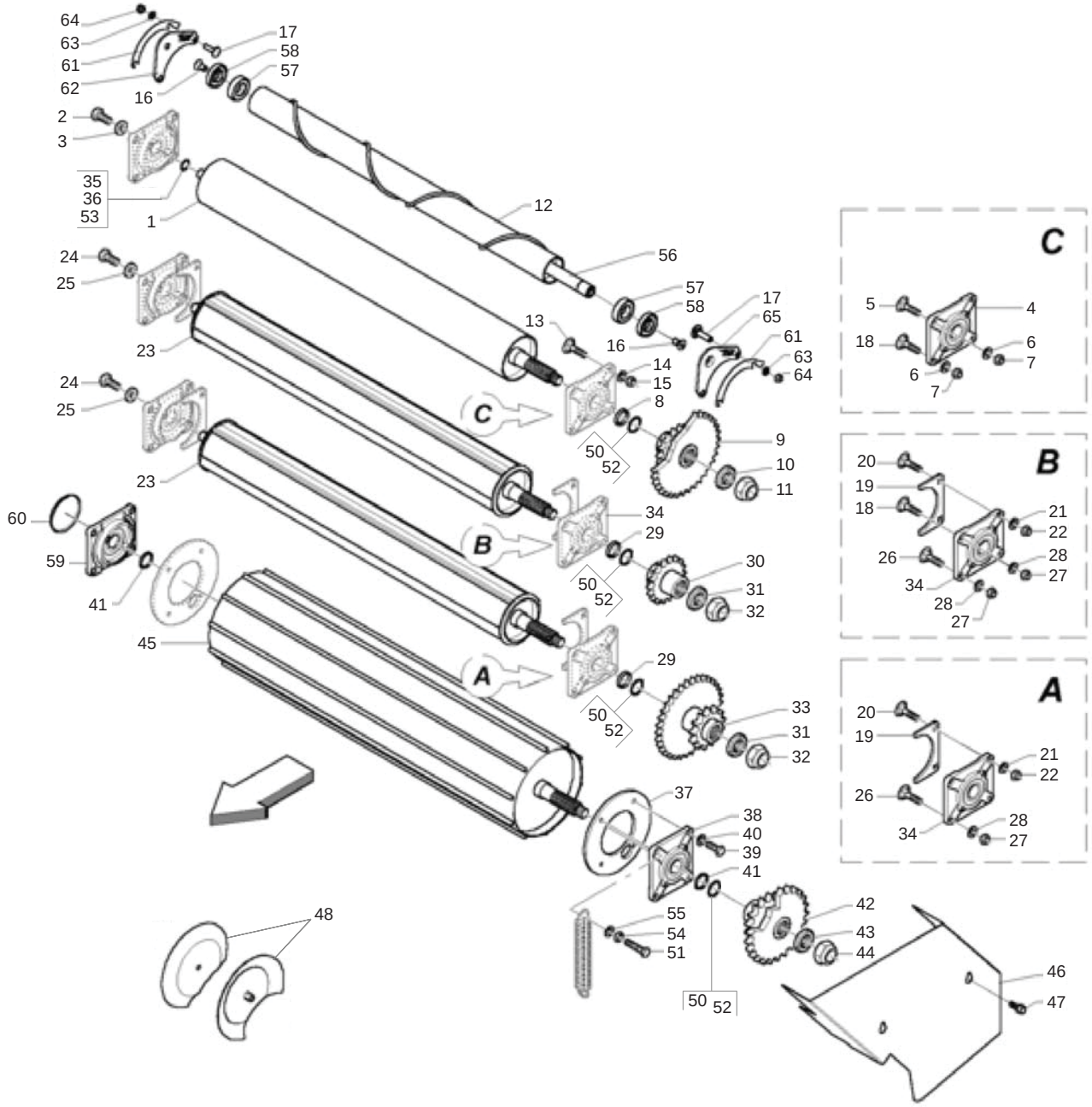




MASCHIO

cod. F07022223

# RULLI "H20"
## *ROLLERS "H20"*

TAV_060

| Pos. | Cod. | Descrizione | Description | Description | Benennung | Descripcion |
|---|---|---|---|---|---|---|
| 1 | B07S00942 | RULLO MOT. INFERIORE NL | LOWER MOTOR ROLLER | ROULEAU MOTEUR INFERIEUR | UNTERE MOTORWALZE | |
| 2 | F01020564 | VITE M16X2X35 U5739 8.8ZN | SCR. M16X2X35 U5739 8.8ZN | VIS M 16X35 | SCHRAUBE M 16X35 | TORNILLO M 16X35 |
| 3 | B01515091 | RALLA 17 52 6 | FIFTH WHEEL | BUTEE | SCHEIBE | |
| 4 | B02700051 | SUPPORTO FLANGIATO | FLANGED SUPPORT | SUPPORT EMBOUTI | FLANSCHLAGER | |
| 5 | B00523421 | VITE SPECIALE TTQST M12X35-8.8 | SPECIAL SCREW | VIS SPCIALE | SCHRAUBE TTQST M12X 35-8.8 | |
| 6 | F01410076 | ROS.M12 13X 20X2,0 U1749 ZN | WASHER | RONDELLE | SCHEIBE | |
| 7 | B00920412 | DADO M12X1,75 D985 8 ZN | NUT | ECROU | SELBSTSICHERNDE MUTTER M12-5S | |
| 8 | B01300845 | DISTANZIALE 40X50X4 | SPACER | ENTRETOISE | DISTANZSCHEIBE 40X50X4 | |
| 9 | B03400287 | INGR. Z=26 10; 1, 1; ISO 16B-1 | SMOOTH ROLLER GEAR Z=23-10 1 | ENGRANAGE | ZAHNRAD Z=23-10 1 | |
| 10 | B014R3050 | ROSETTA 30 UNI 5714-69 E DEIDR | WASHER | RONDELLE | BEILAGSSCHEIBE | |
| 11 | F01230291 | DADO M30X 2 D985 ZN | NUT | ECROU | SELBSTSICHERNDE MUTTER M30X2-5 | |
| 12 | B07SP0333 | RULLO AIUTO PRODOTTO SPRINTER | ROLLER SPRINTER | | | |
| 13 | B00523395 | VITE SPECIALE TTQST M12X45-8.8 | SPECIAL SCREW | VIS SPECIALE | SCHRAUBE TTQST M12X 45-8.8 | |
| 14 | F01410076 | ROS.M12 13X 20X2,0 U1749 ZN | WASHER | RONDELLE | SCHEIBE | |
| 15 | B00920412 | DADO M12X1,75 D985 8 ZN | NUT | ECROU | SELBSTSICHERNDE MUTTER M12-5S | |
| 16 | B00441630 | VITE ZINC.TSPEI M16X 30-10.9 | SCREW | | | |
| 17 | B00523395 | VITE SPECIALE TTQST M12X45-8.8 | SPECIAL SCREW | VIS SPECIALE | SCHRAUBE TTQST M12X 45-8.8 | |
| 18 | B005C0002 | VITE TTQST 12X35-8.8 TORNITA | SCREW | VIS | SCHRAUBE | |
| 19 | B0C6P0003 | RIPARO RULLI ALETTATI | ROLLERS GUARD | PROTECTION ROULEAUX | SCHUETZ WALZEN | |
| 20 | B00523395 | VITE SPECIALE TTQST M12X45-8.8 | SPECIAL SCREW | VIS SPECIALE | SCHRAUBE TTQST M12X 45-8.8 | |
| 21 | F01410076 | ROS.M12 13X 20X2,0 U1749 ZN | WASHER | RONDELLE | SCHEIBE | |
| 22 | B00920412 | DADO M12X1,75 D985 8 ZN | NUT | ECROU | SELBSTSICHERNDE MUTTER M12-5S | |
| 23 | B07SP0062 | RULLO LT | LT ROLLER | ROULEAU LT | WALZE LT | |
| 24 | F01020564 | VITE M16X2X35 U5739 8.8ZN | SCR. M16X2X35 U5739 8.8ZN | VIS M 16X35 | SCHRAUBE M 16X35 | TORNILLO M 16X35 |
| 25 | B01515091 | RALLA 17 52 6 | FIFTH WHEEL | BUTEE | SCHEIBE | |
| 26 | B00523421 | VITE SPECIALE TTQST M12X35-8.8 | SPECIAL SCREW | VIS SPCIALE | SCHRAUBE TTQST M12X 35-8.8 | |
| 27 | B00920412 | DADO M12X1,75 D985 8 ZN | NUT | ECROU | SELBSTSICHERNDE MUTTER M12-5S | |
| 28 | F01410076 | ROS.M12 13X 20X2,0 U1749 ZN | WASHER | RONDELLE | SCHEIBE | |
| 29 | B01300845 | DISTANZIALE 40X50X4 | SPACER | ENTRETOISE | DISTANZSCHEIBE 40X50X4 | |
| 30 | B03400235 | INGRANAGGIO Z=11-1 | GEAR Z=11-1 | ENGRENAGE | ZAHNRAD Z=11-1 | |
| 31 | B014R3050 | ROSETTA 30 UNI 5714-69 E DEIDR | WASHER | RONDELLE | BEILAGSSCHEIBE | |
| 32 | F01230291 | DADO M30X 2 D985 ZN | NUT | ECROU | SELBSTSICHERNDE MUTTER M30X2-5 | |
| 33 | B034P0006 | INGR.RULLO BACC.INF.Z=23-12 1 | LOWER GEAR ROLLER Z=23-12 1 | ENGRANAGE ROULEAU INF. Z=23-12 | ZAHNRAD | |
| 34 | B02700051 | SUPPORTO FLANGIATO | FLANGED SUPPORT | SUPPORT EMBOUTI | FLANSCHLAGER | |
| 35 | B01300151 | SPES. 40 48 2 ZINCATO | SHIM | ENTRETOISE | DISTANZSTUECK 40 48 2 | |
| 36 | B01300126 | SPES. 40 48 1 ZINC.ST_013 | SHIM | ENTRETOISE | DISTANZSTUECK 40 408 1 | |
| 37 | B0C003056 | PIASTRA INTERNA RULLO GRANDE | ROLLER INNER PLATE | TOLE INTERIEUR ROULEAU | WALZEN INNENSCHEIBE | |
| 38 | B02700106 | SUPP. FLANG. FILETTATO | THREADED FLANGED SUPPORT | SUPPORT FILETE | HALTER | |
| 39 | F01020512 | VITE M12X1,75X35 U5739 8.8ZN | SCR. M12X1,75X35 U5739 8.8ZN | VIS M12X1,75X35 5739 8.8 ZN | SCHR. M12X1,75X35 5739 8.8 ZN | TORN. M12X1,75X35 5739 8.8 ZN |
| 40 | F01410076 | ROS.M12 13X 20X2,0 U1749 ZN | WASHER | RONDELLE | SCHEIBE | |
| 41 | B01300151 | SPES. 40 48 2 ZINCATO | SHIM | ENTRETOISE | DISTANZSTUECK 40 48 2 | |
| 42 | B03400290 | INGR.RULLO GRANDE Z=16-24 1 | BIG ROLLER GEAR Z=16-24 1 | ENGRANAGE | ZAHNRAD | |
| 43 | B014R3050 | ROSETTA 30 UNI 5714-69 E DEIDR | WASHER | RONDELLE | BEILAGSSCHEIBE | |
| 44 | F01230291 | DADO M30X 2 D985 ZN | NUT | ECROU | SELBSTSICHERNDE MUTTER M30X2-5 | |
| 45 | B07S01841 | RULLO GRANDE NEW | BIG ROLLER | ROUELAU GRAND NEW | GROSSE WALZE | |
| 46 | B0C3P0001G | CARTER | GUARD | | | |
| 47 | B00370001 | VITE TE M 8X16 A SEZ.TRILOBATA | SCREW TRE M 8X16 SEZ TROUBLED | VIS | SCHRAUBE M 8X15 | |
| 48 | B07S01845 | TAZZA RESTRINGIMENTO | CHAMBER TIGHTENING CUPS | TASSE DE RETRECISSEMENT NEW | KAMMERVERENGUNGSTASSEN | |
| 50 | B01300125 | SPES. 40 48 0,5 ZINCATO | SHIM GALV | ENTRETOISE GALV | DISTANZSTUECK 40 48 0,5 | |
| 51 | B00471235 | VITE TTEI M12X 35-8.8 UNBRA | SCREW | VIS | SCHRAUBE TTEI M12X35-8.8 | |
| 52 | B01300126 | SPES. 40 48 1 ZINC.ST_013 | SHIM | ENTRETOISE | DISTANZSTUECK 40 408 1 | |
| 53 | B01300125 | SPES. 40 48 0,5 ZINCATO | SHIM GALV | ENTRETOISE GALV | DISTANZSTUECK 40 48 0,5 | |
| 54 | F01200293 | DADO M12X1,75 U5588 CL8 ZN | NUT M12X1,75 U5588 6S ZN | ECROU M12X1,75 U5588 6S ZN | MUTTER M12X1,75 U5588 6S ZN | TUERCA M12X1,75 U5588 6S ZN |
| 55 | F01410076 | ROS.M12 13X 20X2,0 U1749 ZN | WASHER | RONDELLE | SCHEIBE | |
| 56 | B03500324 | ALBERO LUNGO SPRINTER | SHAFT | ARBRE LONG SPRINTER | LANGE WELLE | |
| 57 | B02043517 | CUSC.. 6207-2RS CAT.B-ST004 | BEARING | ROULEMENT | LAGER 6207-2RS | |
| 58 | B013P0150 | CHIUSURA RULLI PULITORE | ROLLER LOCK | FERMETURE ROULEAUX | WALZEN VERSCHLUSS | |

TAV_060

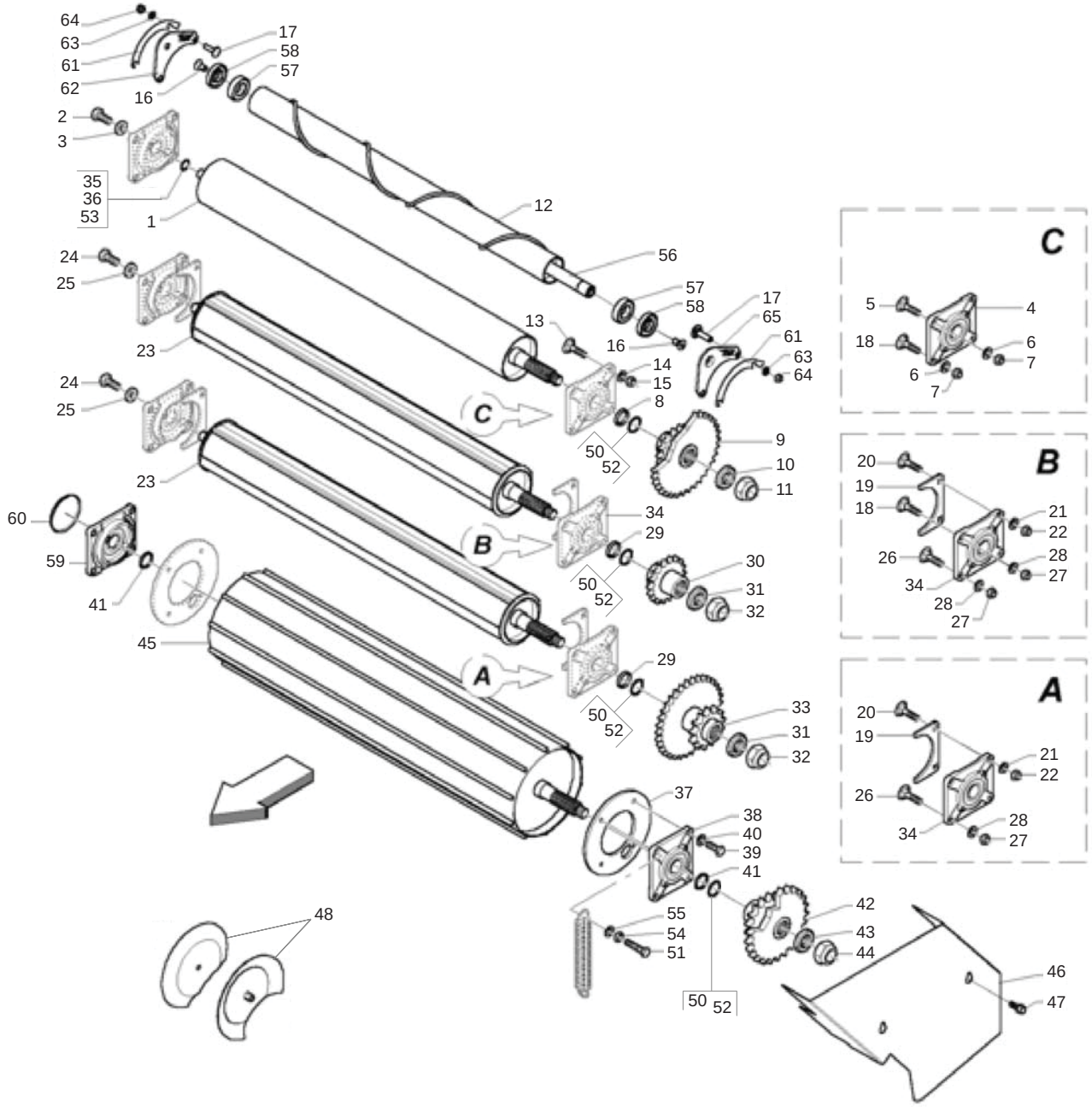




MASCHIO

cod. F07022223

# RULLI "H20"
## *ROLLERS "H20"*

TAV_060

| Pos. | Cod. | Descrizione | Description | Description | Benennung | Descripcion |
|---|---|---|---|---|---|---|
| 59 | B02700153 | SUPPORTO FLANGIATO | FLANGED SUPPORT | SUPPORT POUR ROTOR CUT | FLANSCHLAGER | |
| 60 | B04400001 | CAP. CHIUSO 110X10 TIPO C | CAP | COUVERCLE | GESCHLOSSENE KAPPE | |
| 61 | B0C6P0430 | SPES. PER ATTACCO H20 | SHIM | ENTRETOISE | DICHTUNG FUER ANSCHLUSS H 20 | |
| 62 | B0C6P0429 | ATTACCO DX RULLO SPIRALE H20 | ATTACHEMENT | ATTELAGE | ANSCHLUSS RECHTS WALZE | |
| 63 | F01410076 | ROS.M12 13X 20X2,0 U1749 ZN | WASHER | RONDELLE | SCHEIBE | |
| 64 | B00920412 | DADO M12X1,75 D985 8 ZN | NUT | ECROU | SELBSTSICHERNDE MUTTER M12-5S | |
| 65 | B0C6P0428 | ATTACCO SX RULLO SPIRALE H20 | ATTACHEMENT | ATTELAGE | ANSCHLUSS LINKS WALZE | |

TAV_065

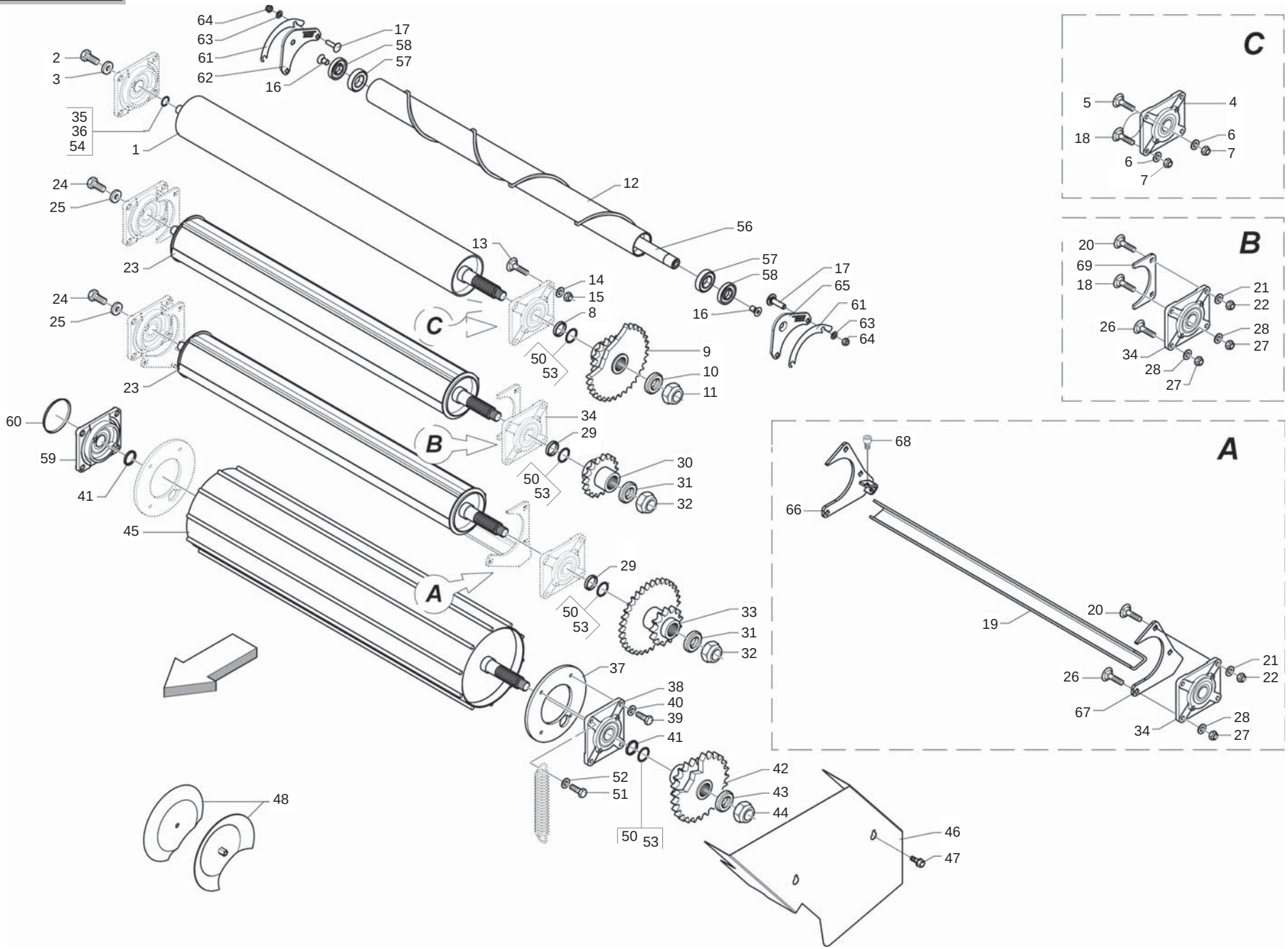




MASCHIO

cod. F07022223

# RULLI CUT "H20"
## *ROLLERS CUT "H20"*

TAV_065

| Pos. | Cod. | Descrizione | Description | Description | Benennung | Descripcion |
|---|---|---|---|---|---|---|
| 1 | B07S00942 | RULLO MOT. INFERIORE NL | LOWER MOTOR ROLLER | ROULEAU MOTEUR INFERIEUR | UNTERE MOTORWALZE | |
| 2 | F01020564 | VITE M16X2X35 U5739 8.8ZN | SCR. M16X2X35 U5739 8.8ZN | VIS M 16X35 | SCHRAUBE M 16X35 | TORNILLO M 16X35 |
| 3 | B01515091 | RALLA 17 52 6 | FIFTH WHEEL | BUTEE | SCHEIBE | |
| 4 | B02700051 | SUPPORTO FLANGIATO | FLANGED SUPPORT | SUPPORT EMBOUTI | FLANSCHLAGER | |
| 5 | B00523421 | VITE SPECIALE TTQST M12X35-8.8 | SPECIAL SCREW | VIS SPCIALE | SCHRAUBE TTQST M12X 35-8.8 | |
| 6 | F01410076 | ROS.M12 13X 20X2,0 U1749 ZN | WASHER | RONDELLE | SCHEIBE | |
| 7 | B00920412 | DADO M12X1,75 D985 8 ZN | NUT | ECROU | SELBSTSICHERNDE MUTTER M12-5S | |
| 8 | B01300845 | DISTANZIALE 40X50X4 | SPACER | ENTRETOISE | DISTANZSCHEIBE 40X50X4 | |
| 9 | B03400287 | INGR. Z=26 10; 1, 1; ISO 16B-1 | SMOOTH ROLLER GEAR Z=23-10 1 | ENGRANAGE | ZAHNRAD Z=23-10 1 | |
| 10 | B014R3050 | ROSETTA 30 UNI 5714-69 E DEIDR | WASHER | RONDELLE | BEILAGSSCHEIBE | |
| 11 | F01230291 | DADO M30X 2 D985 ZN | NUT | ECROU | SELBSTSICHERNDE MUTTER M30X2-5 | |
| 12 | B07SP0333 | RULLO AIUTO PRODOTTO SPRINTER | ROLLER SPRINTER | | | |
| 13 | B00523395 | VITE SPECIALE TTQST M12X45-8.8 | SPECIAL SCREW | VIS SPECIALE | SCHRAUBE TTQST M12X 45-8.8 | |
| 14 | F01410076 | ROS.M12 13X 20X2,0 U1749 ZN | WASHER | RONDELLE | SCHEIBE | |
| 15 | B00920412 | DADO M12X1,75 D985 8 ZN | NUT | ECROU | SELBSTSICHERNDE MUTTER M12-5S | |
| 16 | B00441630 | VITE ZINC.TSPEI M16X 30-10.9 | SCREW | | | |
| 17 | F01410100 | ROS.M16 17X 30X 3 U6592 ZN | WASHER | RONDELLE | SCHEIBE | |
| 18 | B005C0002 | VITE TTQST 12X35-8.8 TORNITA | SCREW | VIS | SCHRAUBE | |
| 19 | B0C1P0218 | CORPO TRAVERSA | CROSSBAR FRAME | | | |
| 20 | B00523395 | VITE SPECIALE TTQST M12X45-8.8 | SPECIAL SCREW | VIS SPECIALE | SCHRAUBE TTQST M12X 45-8.8 | |
| 21 | F01410076 | ROS.M12 13X 20X2,0 U1749 ZN | WASHER | RONDELLE | SCHEIBE | |
| 22 | B00920412 | DADO M12X1,75 D985 8 ZN | NUT | ECROU | SELBSTSICHERNDE MUTTER M12-5S | |
| 23 | B07SP0062 | RULLO LT | LT ROLLER | ROULEAU LT | WALZE LT | |
| 24 | F01020564 | VITE M16X2X35 U5739 8.8ZN | SCR. M16X2X35 U5739 8.8ZN | VIS M 16X35 | SCHRAUBE M 16X35 | TORNILLO M 16X35 |
| 25 | B01515091 | RALLA 17 52 6 | FIFTH WHEEL | BUTEE | SCHEIBE | |
| 26 | B00523421 | VITE SPECIALE TTQST M12X35-8.8 | SPECIAL SCREW | VIS SPCIALE | SCHRAUBE TTQST M12X 35-8.8 | |
| 27 | B00920412 | DADO M12X1,75 D985 8 ZN | NUT | ECROU | SELBSTSICHERNDE MUTTER M12-5S | |
| 28 | F01410076 | ROS.M12 13X 20X2,0 U1749 ZN | WASHER | RONDELLE | SCHEIBE | |
| 29 | B01300845 | DISTANZIALE 40X50X4 | SPACER | ENTRETOISE | DISTANZSCHEIBE 40X50X4 | |
| 30 | B03400235 | INGRANAGGIO Z=11-1 | GEAR Z=11-1 | ENGRENAGE | ZAHNRAD Z=11-1 | |
| 31 | B014R3050 | ROSETTA 30 UNI 5714-69 E DEIDR | WASHER | RONDELLE | BEILAGSSCHEIBE | |
| 32 | F01230291 | DADO M30X 2 D985 ZN | NUT | ECROU | SELBSTSICHERNDE MUTTER M30X2-5 | |
| 33 | B034P0006 | INGR.RULLO BACC.INF.Z=23-12 1 | LOWER GEAR ROLLER Z=23-12 1 | ENGRANAGE ROULEAU INF. Z=23-12 | ZAHNRAD | |
| 34 | B02700051 | SUPPORTO FLANGIATO | FLANGED SUPPORT | SUPPORT EMBOUTI | FLANSCHLAGER | |
| 35 | B01300151 | SPES. 40 48 2 ZINCATO | SHIM | ENTRETOISE | DISTANZSTUECK 40 48 2 | |
| 36 | B01300125 | SPES. 40 48 0,5 ZINCATO | SHIM GALV | ENTRETOISE GALV | DISTANZSTUECK 40 48 0,5 | |
| 37 | B0C003056 | PIASTRA INTERNA RULLO GRANDE | ROLLER INNER PLATE | TOLE INTERIEUR ROULEAU | WALZEN INNENSCHEIBE | |
| 38 | B02700106 | SUPP. FLANG. FILETTATO | THREADED FLANGED SUPPORT | SUPPORT FILETE | HALTER | |
| 39 | F01020512 | VITE M12X1,75X35 U5739 8.8ZN | SCR. M12X1,75X35 U5739 8.8ZN | VIS M12X1,75X35 5739 8.8 ZN | SCHR. M12X1,75X35 5739 8.8 ZN | TORN. M12X1,75X35 5739 8.8 ZN |
| 40 | F01410076 | ROS.M12 13X 20X2,0 U1749 ZN | WASHER | RONDELLE | SCHEIBE | |
| 41 | B01300151 | SPES. 40 48 2 ZINCATO | SHIM | ENTRETOISE | DISTANZSTUECK 40 48 2 | |
| 42 | B03400290 | INGR.RULLO GRANDE Z=16-24 1 | BIG ROLLER GEAR Z=16-24 1 | ENGRANAGE | ZAHNRAD | |
| 43 | B014R3050 | ROSETTA 30 UNI 5714-69 E DEIDR | WASHER | RONDELLE | BEILAGSSCHEIBE | |
| 44 | F01230291 | DADO M30X 2 D985 ZN | NUT | ECROU | SELBSTSICHERNDE MUTTER M30X2-5 | |
| 45 | B07S01841 | RULLO GRANDE NEW | BIG ROLLER | ROUELAU GRAND NEW | GROSSE WALZE | |
| 46 | B0C3P0001G | CARTER | GUARD | | | |
| 47 | B00370001 | VITE TE M 8X16 A SEZ.TRILOBATA | SCREW TRE M 8X16 SEZ TROUBLED | VIS | SCHRAUBE M 8X15 | |
| 48 | B07S01845 | TAZZA RESTRINGIMENTO | CHAMBER TIGHTENING CUPS | TASSE DE RETRECISSEMENT NEW | KAMMERVERENGUNGSTASSEN | |
| 50 | B01300126 | SPES. 40 48 1 ZINC.ST_013 | SHIM | ENTRETOISE | DISTANZSTUECK 40 408 1 | |
| 51 | B00471235 | VITE TTEI M12X 35-8.8 UNBRA | SCREW | VIS | SCHRAUBE TTEI M12X35-8.8 | |
| 52 | F01420120 | ROS.M12 13X 36X2,5 U6593 ZN | WASHER | RONDELLE | SCHEIBE | |
| 53 | B01300125 | SPES. 40 48 0,5 ZINCATO | SHIM GALV | ENTRETOISE GALV | DISTANZSTUECK 40 48 0,5 | |
| 54 | B01300126 | SPES. 40 48 1 ZINC.ST_013 | SHIM | ENTRETOISE | DISTANZSTUECK 40 408 1 | |
| 56 | B03500324 | ALBERO LUNGO SPRINTER | SHAFT | ARBRE LONG SPRINTER | LANGE WELLE | |
| 57 | B02043517 | CUSC.. 6207-2RS CAT.B-ST004 | BEARING | ROULEMENT | LAGER 6207-2RS | |
| 58 | B013P0150 | CHIUSURA RULLI PULITORE | ROLLER LOCK | FERMETURE ROULEAUX | WALZEN VERSCHLUSS | |
| 59 | B02700153 | SUPPORTO FLANGIATO | FLANGED SUPPORT | SUPPORT POUR ROTOR CUT | FLANSCHLAGER | |

TAV_065

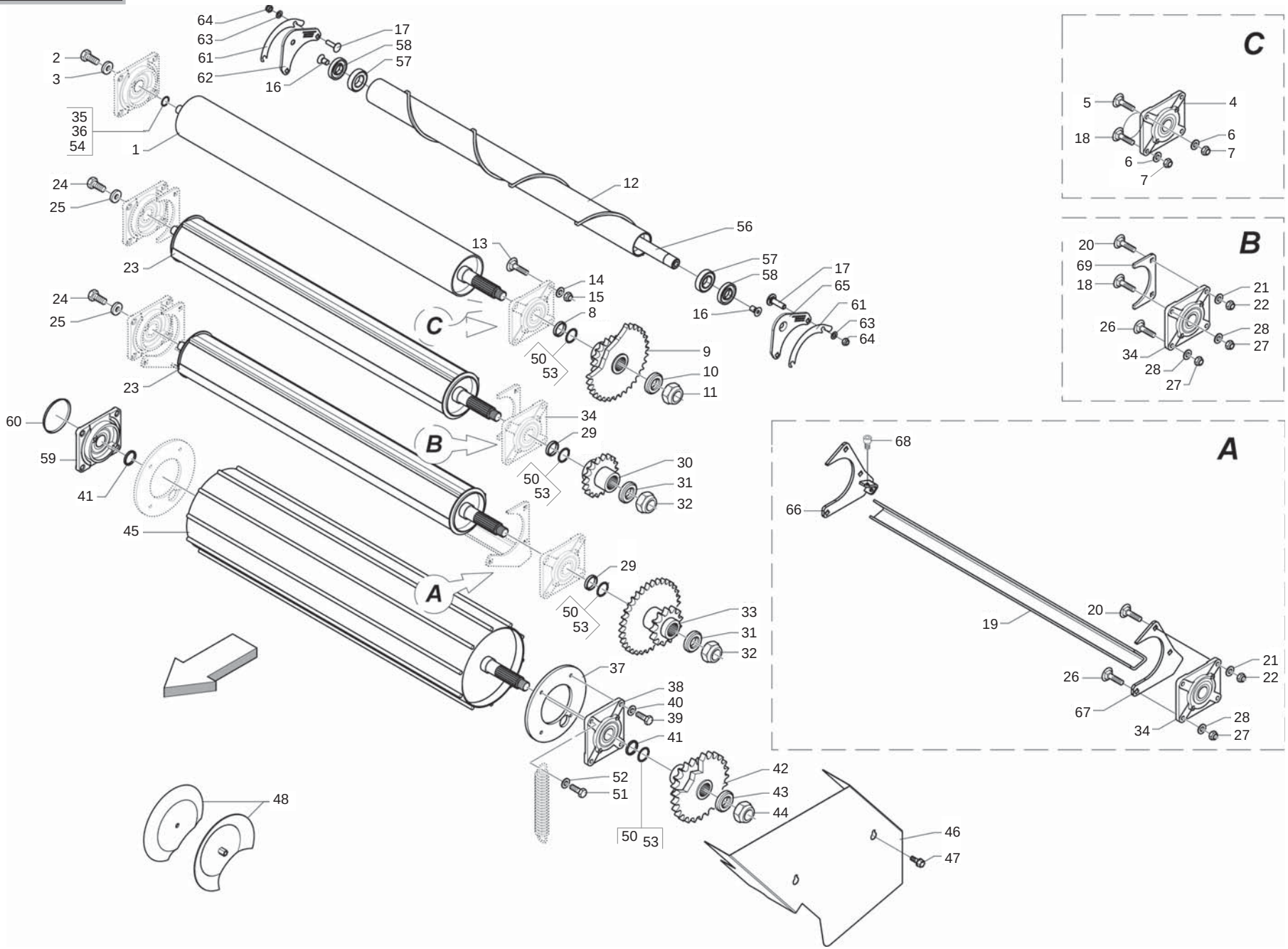




MASCHIO

cod. F07022223

# RULLI CUT "H20"
## *ROLLERS CUT "H20"*

TAV_065

| Pos. | Cod. | Descrizione | Description | Description | Benennung | Descripcion |
|---|---|---|---|---|---|---|
| 60 | B04400001 | CAP. CHIUSO 110X10 TIPO C | CAP | COUVERCLE | GESCHLOSSENE KAPPE | |
| 61 | B0C6P0430 | SPES. PER ATTACCO H20 | SHIM | ENTRETOISE | DICHTUNG FUER ANSCHLUSS H 20 | |
| 62 | B0C6P0429 | ATTACCO DX RULLO SPIRALE H20 | ATTACHEMENT | ATTELAGE | ANSCHLUSS RECHTS WALZE | |
| 63 | F01410076 | ROS.M12 13X 20X2,0 U1749 ZN | WASHER | RONDELLE | SCHEIBE | |
| 64 | B00920412 | DADO M12X1,75 D985 8 ZN | NUT | ECROU | SELBSTSICHERNDE MUTTER M12-5S | |
| 65 | B0C6P0428 | ATTACCO SX RULLO SPIRALE H20 | ATTACHEMENT | ATTELAGE | ANSCHLUSS LINKS WALZE | |
| 66 | B07SP0736 | ATTACCO LATERALE DX | RIGHT COUPLING | | | |
| 67 | B07SP0735 | ATTACCO LATERALE SX | LEFT COUPLING | | | |
| 68 | B00471220 | VITE TTEI M12X 20-8.8 UNBRA | SCREW | VIS | SCHRAUBE TTEI M12X 20-8.8 | |
| 69 | B0C6P0003 | RIPARO RULLI ALETTATI | ROLLERS GUARD | PROTECTION ROULEAUX | SCHUETZ WALZEN | |

# TAV_070

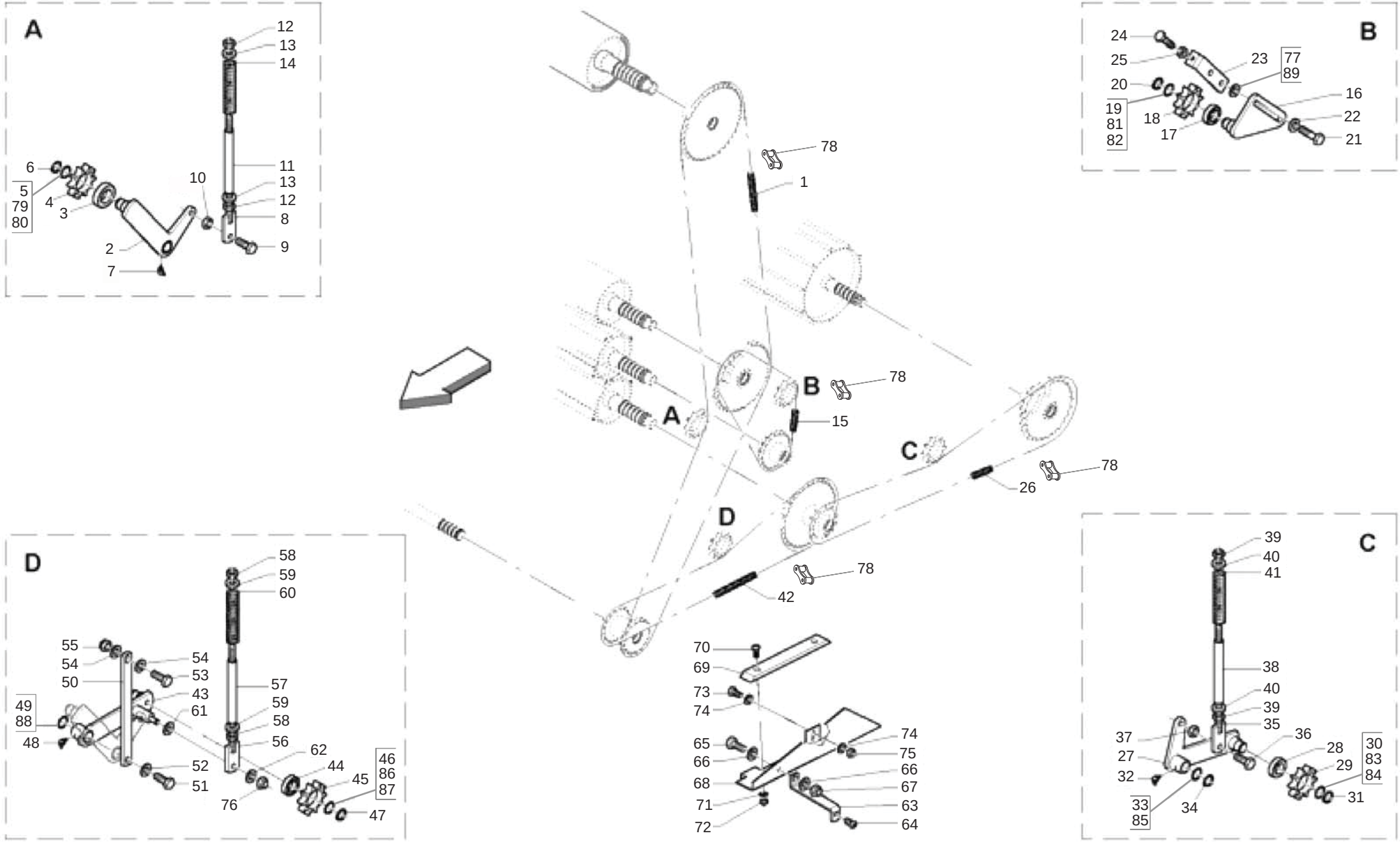




MASCHIO

cod. F07022223

# TRASMISSIONE
## *TRANSMISSION*

TAV_070

| Pos. | Cod. | Descrizione | Description | Description | Benennung | Descripcion |
|---|---|---|---|---|---|---|
| 1 | B030E1149 | CATENA RULLI ISO 16 B-1 149M | ROLLER CHAIN | CHAINE ROULEAUX | WALZENKETTE | |
| 2 | B07S00953 | BRACCIO TENDITORE SX | RIGHT TENSIONER ROD | BRAS TENDEUR GAUCHE | RECHTER SPANNARM | |
| 3 | F04010170 | CUSC.D25 D52 B15 6205 2RS EX | BEARING D25 D52 B15 6205 2RS | ROULEMENT 6205 2RS | LAGER 6205 2RS | COJINETE 6205 2RS |
| 4 | B03400274 | CORONA Z10-1 ISO F52 TRATT | SPROCKET Z=10-1 | ENGRANAGE SPECIAL TRAITE | ZAHNKRANZ Z=10-1 | |
| 5 | B01300105 | SPES. 25,5 37 0,5 | SHIM | ENTRETOISE | DISTANZSTUECK 25,5 37 0,5 | |
| 6 | F02050101 | ANEL. D ARR. ALB. 25-E UNI3653 | SEEGER RING | BAGUE SEEGER | SEEGERRING 25-E | |
| 7 | B04210610 | INGRAS HYDR A 45 M 6X1 | GREASE NIPPLE | GRAISSEUR HYDRAULIQUE | SCHMIERNIPPEL M6X1 45 | |
| 8 | B07S01441 | TIRANTE GALOPPINO M16 | TIGHTENING PULLEY ROD M16 | TIRANT M16 | FUEHRUNGSROLLENSPANNSTANGE M16 | |
| 9 | F01020512 | VITE M12X1,75X35 U5739 8.8ZN | SCR. M12X1,75X35 U5739 8.8ZN | VIS M12X1,75X35 5739 8.8 ZN | SCHR. M12X1,75X35 5739 8.8 ZN | TORN. M12X1,75X35 5739 8.8 ZN |
| 10 | F01200293 | DADO M12X1,75 U5588 CL8 ZN | NUT M12X1,75 U5588 6S ZN | ECROU M12X1,75 U5588 6S ZN | MUTTER M12X1,75 U5588 6S ZN | TUERCA M12X1,75 U5588 6S ZN |
| 11 | B01300157 | DISTANZIALE 16,6X21,3X165 | SPACER | ENTRETOISE | ABSTANZSTUECK 16,6X21,3X165 | |
| 12 | B00710516 | DADO M16X 2 U5588 6.8 ZN | NUT M16X2 U5588 6.8 ZN | ECROU | MUTTER M16-6S | |
| 13 | B01519319 | RALLA 16X38X5 | FIFTH WHEEL | BUTEE | SCREIBE | |
| 14 | B01800046 | MOLLA 6 30 180C | SPRING | RESSORT | FEDER | |
| 15 | B030E1027 | CATENA RULLI ISO 16 B-1 27M | ROLLER CHAIN ISO16 B-1 27M | CHAINE ROULEAUX | WALZENKETTE | |
| 16 | B07S00958 | TIRANTE FISSO | TIE ROD | TIRANT FIXE | ZUGSTANGE | |
| 17 | F04010170 | CUSC.D25 D52 B15 6205 2RS EX | BEARING D25 D52 B15 6205 2RS | ROULEMENT 6205 2RS | LAGER 6205 2RS | COJINETE 6205 2RS |
| 18 | B03400274 | CORONA Z10-1 ISO F52 TRATT | SPROCKET Z=10-1 | ENGRANAGE SPECIAL TRAITE | ZAHNKRANZ Z=10-1 | |
| 19 | B01300105 | SPES. 25,5 37 0,5 | SHIM | ENTRETOISE | DISTANZSTUECK 25,5 37 0,5 | |
| 20 | F02050101 | ANEL. D ARR. ALB. 25-E UNI3653 | SEEGER RING | BAGUE SEEGER | SEEGERRING 25-E | |
| 21 | B00191250 | VITE M12X1,75X 50 U5737 8.8ZN | SCREW | VIS | SCHRAUBE | |
| 22 | B01516038 | RALLA 13 32 5 | FIFTH WHEEL | BUTEE | SCHEIBE | |
| 23 | B0C003605 | TIRANTE INFALDATORE | FEEDER CONNECTING ROD | TIRANT AMENEUR | RAFFER ZUGSTANGE | |
| 24 | F01020517 | VITE M12X1,75X 50 U5739 8.8ZN | SCREW | VIS | SCHRAUBE | |
| 25 | F01200293 | DADO M12X1,75 U5588 CL8 ZN | NUT M12X1,75 U5588 6S ZN | ECROU M12X1,75 U5588 6S ZN | MUTTER M12X1,75 U5588 6S ZN | TUERCA M12X1,75 U5588 6S ZN |
| 26 | B030E1056 | CATENA RULLI ISO 16 B-1 56M | ROLLER CHAIN ISO16 B-1 56M | CHAINE ROULEAUX | WALZENKETTE | |
| 27 | B07S00953 | BRACCIO TENDITORE SX | RIGHT TENSIONER ROD | BRAS TENDEUR GAUCHE | RECHTER SPANNARM | |
| 28 | F04010170 | CUSC.D25 D52 B15 6205 2RS EX | BEARING D25 D52 B15 6205 2RS | ROULEMENT 6205 2RS | LAGER 6205 2RS | COJINETE 6205 2RS |
| 29 | B03400274 | CORONA Z10-1 ISO F52 TRATT | SPROCKET Z=10-1 | ENGRANAGE SPECIAL TRAITE | ZAHNKRANZ Z=10-1 | |
| 30 | B01300104 | SPES. 25,5 37 0,2 | SHIM | ENTRETOISE | BEILAGSCHEIBE 25,5 37 0,2 | |
| 31 | F02050101 | ANEL. D ARR. ALB. 25-E UNI3653 | SEEGER RING | BAGUE SEEGER | SEEGERRING 25-E | |
| 32 | B04210610 | INGRAS HYDR A 45 M 6X1 | GREASE NIPPLE | GRAISSEUR HYDRAULIQUE | SCHMIERNIPPEL M6X1 45 | |
| 33 | B01300105 | SPES. 25,5 37 0,5 | SHIM | ENTRETOISE | DISTANZSTUECK 25,5 37 0,5 | |
| 34 | F02050101 | ANEL. D ARR. ALB. 25-E UNI3653 | SEEGER RING | BAGUE SEEGER | SEEGERRING 25-E | |
| 35 | B07S01441 | TIRANTE GALOPPINO M16 | TIGHTENING PULLEY ROD M16 | TIRANT M16 | FUEHRUNGSROLLENSPANNSTANGE M16 | |
| 36 | F01020512 | VITE M12X1,75X35 U5739 8.8ZN | SCR. M12X1,75X35 U5739 8.8ZN | VIS M12X1,75X35 5739 8.8 ZN | SCHR. M12X1,75X35 5739 8.8 ZN | TORN. M12X1,75X35 5739 8.8 ZN |
| 37 | F01200293 | DADO M12X1,75 U5588 CL8 ZN | NUT M12X1,75 U5588 6S ZN | ECROU M12X1,75 U5588 6S ZN | MUTTER M12X1,75 U5588 6S ZN | TUERCA M12X1,75 U5588 6S ZN |
| 38 | B01300157 | DISTANZIALE 16,6X21,3X165 | SPACER | ENTRETOISE | ABSTANZSTUECK 16,6X21,3X165 | |
| 39 | B00710516 | DADO M16X 2 U5588 6.8 ZN | NUT M16X2 U5588 6.8 ZN | ECROU | MUTTER M16-6S | |
| 40 | B01519319 | RALLA 16X38X5 | FIFTH WHEEL | BUTEE | SCREIBE | |
| 41 | B01800046 | MOLLA 6 30 180C | SPRING | RESSORT | FEDER | |
| 42 | B030E1079 | CATENA RULLI ISO 16 B-1 79M | ROLLER CHAIN ISO16 B-1 79M | CHAINE ROULEAUX | WALZENKETTE | |
| 43 | B07S01759 | TENDITORE | TENSIONER | TENDEUR | SPANNER | |
| 44 | F04010170 | CUSC.D25 D52 B15 6205 2RS EX | BEARING D25 D52 B15 6205 2RS | ROULEMENT 6205 2RS | LAGER 6205 2RS | COJINETE 6205 2RS |
| 45 | B03400274 | CORONA Z10-1 ISO F52 TRATT | SPROCKET Z=10-1 | ENGRANAGE SPECIAL TRAITE | ZAHNKRANZ Z=10-1 | |
| 46 | B01300105 | SPES. 25,5 37 0,5 | SHIM | ENTRETOISE | DISTANZSTUECK 25,5 37 0,5 | |
| 47 | F02050101 | ANEL. D ARR. ALB. 25-E UNI3653 | SEEGER RING | BAGUE SEEGER | SEEGERRING 25-E | |
| 48 | B04210610 | INGRAS HYDR A 45 M 6X1 | GREASE NIPPLE | GRAISSEUR HYDRAULIQUE | SCHMIERNIPPEL M6X1 45 | |
| 49 | B01300159 | SPES. 25 37 2 ZINCATO | SHIM GALV | ENTRETOISE GALV | DISTANZSTUECK 25 37 2 | |
| 50 | B0C003057 | COLLEGAMENTO TENDITORI | TIGHTENER CONNECTION | CONNEXION TENDEURS | SPANNERKUPPLUNG | |
| 51 | F01020508 | VITE M12X1,75X 25 U5739 8.8ZN | SCREW | VIS | SCHRAUBE | |
| 52 | F01410076 | ROS.M12 13X 20X2,0 U1749 ZN | WASHER | RONDELLE | SCHEIBE | |
| 53 | F01020510 | VITE M12X1,75X30 U5739 8.8ZN | SCR. M12X1,75X30 U5739 8.8ZN | VIS M12X1,75X30 U5739 8.8ZN | SCHRAU.M12X1,75X30 U5739 8.8ZN | TORN. M12X1,75X30 U5739 8.8ZN |
| 54 | F01410076 | ROS.M12 13X 20X2,0 U1749 ZN | WASHER | RONDELLE | SCHEIBE | |
| 55 | F01230059 | DADO M12X1,75 D982 8ZN | LOCK-NUT M12X1,75 D982 8ZN | ECR.AUTO-FREI.M12X1,75 ZN | SICHERUNGMUT.M12X1,75 D982 8ZN | TUER.DE SEGUR.M12X1,75 D982 |
| ZN | | | | | | |
| 56 | B07S01758 | TIRANTE GALOPPINO M16 | TIE ROD | TIRANT | ZUGSTANGE | |

# TAV_070

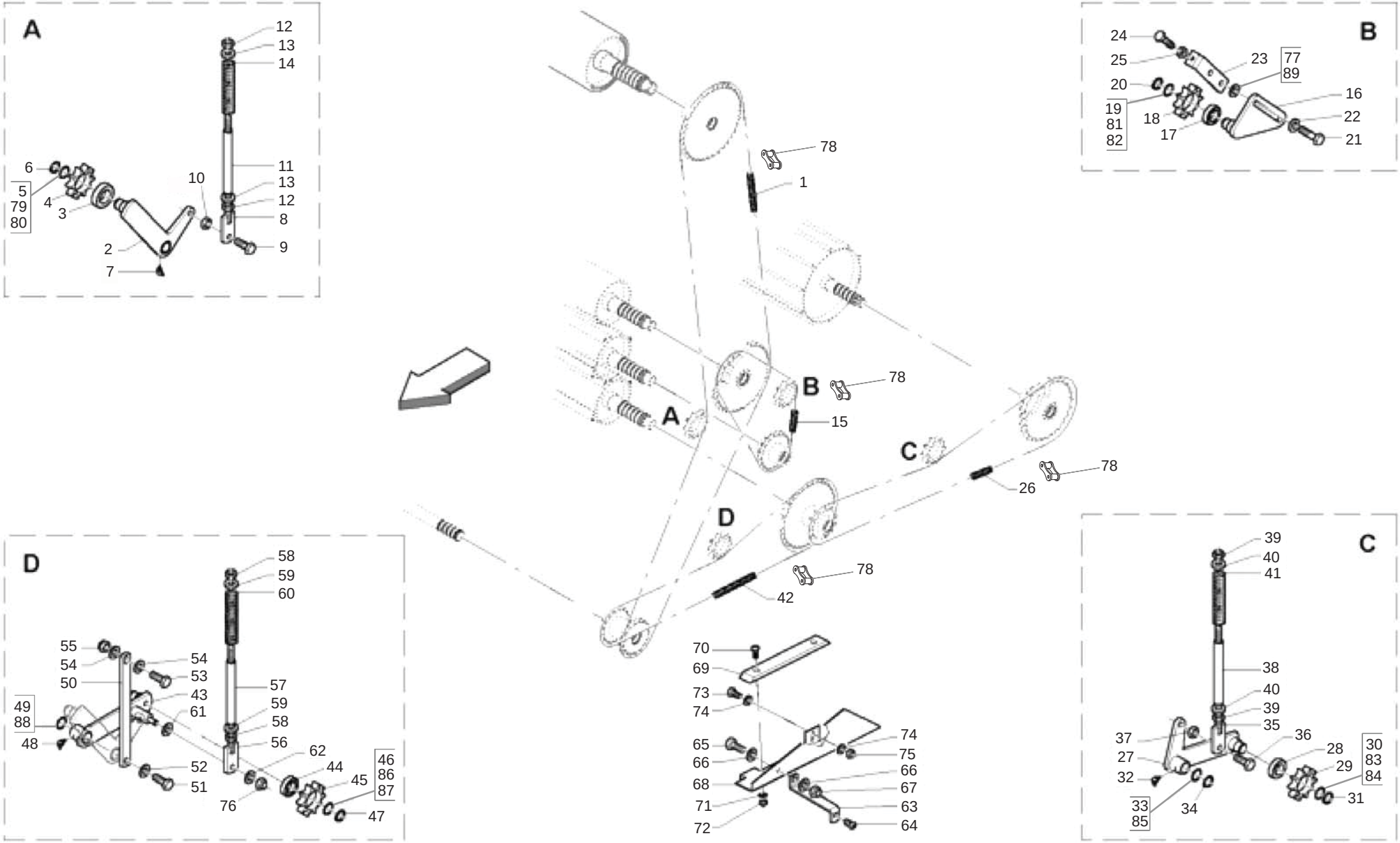
A
12
13
14
11
13
12
8
9
10
6
5
79
80
4
3
2
7
B
24
25
23
77
89
20
19
81
82
18
17
16
22
21
78
1
B
78
A
15
C
78
26
D
78
42
D
58
59
60
55
54
54
53
50
57
43
59
49
88
61
58
48
56
62
52
44
46
86
87
51
45
76
47
70
69
73
74
65
66
68
71
72
74
75
66
67
63
64
C
39
40
41
38
40
39
35
37
36
27
28
30
83
84
32
29
33
85
34
31

# TRASMISSIONE
## *TRANSMISSION*

| Pos. | Cod. | Descrizione | Description | Description | Benennung | Descripcion |
|---|---|---|---|---|---|---|
| 57 | B01300157 | DISTANZIALE 16,6X21,3X165 | SPACER | ENTRETOISE | ABSTANZSTUECK 16,6X21,3X165 | |
| 58 | B00710516 | DADO M16X 2 U5588 6.8 ZN | NUT M16X2 U5588 6.8 ZN | ECROU | MUTTER M16-6S | |
| 59 | B01519319 | RALLA 16X38X5 | FIFTH WHEEL | BUTEE | SCREIBE | |
| 60 | B01800046 | MOLLA 6 30 180C | SPRING | RESSORT | FEDER | |
| 61 | F01410076 | ROS.M12 13X 20X2,0 U1749 ZN | WASHER | RONDELLE | SCHEIBE | |
| 62 | F01410076 | ROS.M12 13X 20X2,0 U1749 ZN | WASHER | RONDELLE | SCHEIBE | |
| 63 | B0C005427 | SOSTEGNO LAT. SX INF.CARTER | GUARD FEEDER LEFT SIDE SUPPORT | SUPPORT LATERAL GAUCHE INF. CA | ANSCHLUSS SEITEN | |
| 64 | B004N0820 | VITE NERA TTEI M 8X 20-10,9 | SCREW | VIS | SCHRAUBE TTEI M 8X20-10,9 | |
| 65 | F01020512 | VITE M12X1,75X35 U5739 8.8ZN | SCR. M12X1,75X35 U5739 8.8ZN | VIS M12X1,75X35 5739 8.8 ZN | SCHR. M12X1,75X35 5739 8.8 ZN | TORN. M12X1,75X35 5739 8.8 ZN |
| 66 | F01410076 | ROS.M12 13X 20X2,0 U1749 ZN | WASHER | RONDELLE | SCHEIBE | |
| 67 | F01230059 | DADO M12X1,75 D982 8ZN | LOCK-NUT M12X1,75 D982 8ZN | ECR.AUTO-FREI.M12X1,75 ZN | SICHERUNGMUT.M12X1,75 D982 8ZN | TUER.DE SEGUR.M12X1,75 D982 ZN |
| 68 | B0C004908 | CARTER | GUARD | CARTER | ABDECKBLECH | |
| 69 | B07631842 | GUIDA CATENA | CHAIN GUIDE | GUIDE | KETTENFUEHRUNG | |
| 70 | F01030208 | VITE TTEI M 8X 20-10,9 UMBRAKO | SCREW | VIS | SCHRAUBE TTEI M 8X 20-10.9 | |
| 71 | F01410051 | ROS.M8 8,4X 17X1,6 U6592 ZN | WASHER M8 8,4X17X1,6 U6592 ZN | RONDELLE | SCHEIBE | |
| 72 | B00920208 | DADO M8X1 D985 8ZN | NUT M8X1 D985 8ZN | ECROU | SELBSTSICHERNDE MUTTER M8-5S | |
| 73 | F01020472 | VITE M10X1,5X25 U5739 8.8ZN | SCR. M10X1,5X25 U5739 8.8ZN | VIS M10X1,5X25 U5739 8.8 ZN | SCHRAUBE M10X1,5X25 U5739 8.8 | TORNILLO 10X25 U5739 8.8 ZN |
| 74 | F01410062 | ROS.M10 10,5X 18X 2 U6592 ZN | WASHER M10 10,5X 18X 2 U6592 | RONDELLE M10 10,5X18X2 ZN | DICHTUNGSRING M10 10,5X18X2 ZN | RONDANA M10 10,5X18X2 ZN |
| 75 | F01230202 | DADO M10X1,25 D985 8 ZN | SELF-LOCKING NUT | ECROU NYLSTOP | SELBSTSICHERNDE MUTTER M10-5S | |
| 76 | F01230059 | DADO M12X1,75 D982 8ZN | LOCK-NUT M12X1,75 D982 8ZN | ECR.AUTO-FREI.M12X1,75 ZN | SICHERUNGMUT.M12X1,75 D982 8ZN | TUER.DE SEGUR.M12X1,75 D982 ZN |
| 77 | F01420120 | ROS.M12 13X 36X2,5 U6593 ZN | WASHER | RONDELLE | SCHEIBE | |
| 78 | B030E0017 | GIUNTO MOLL N26 ISO 16 B-1 | SPRING JOINT N.26 ISO 16 B-1 | JOINT RESSORT | KETTENFEDER | |
| 79 | B01300104 | SPES. 25,5 37 0,2 | SHIM | ENTRETOISE | BEILAGSCHEIBE 25,5 37 0,2 | |
| 80 | B01300104 | SPES. 25,5 37 0,2 | SHIM | ENTRETOISE | BEILAGSCHEIBE 25,5 37 0,2 | |
| 81 | B01300104 | SPES. 25,5 37 0,2 | SHIM | ENTRETOISE | BEILAGSCHEIBE 25,5 37 0,2 | |
| 82 | B01300104 | SPES. 25,5 37 0,2 | SHIM | ENTRETOISE | BEILAGSCHEIBE 25,5 37 0,2 | |
| 83 | B01300105 | SPES. 25,5 37 0,5 | SHIM | ENTRETOISE | DISTANZSTUECK 25,5 37 0,5 | |
| 84 | B01300104 | SPES. 25,5 37 0,2 | SHIM | ENTRETOISE | BEILAGSCHEIBE 25,5 37 0,2 | |
| 85 | B01300159 | SPES. 25 37 2 ZINCATO | SHIM GALV | ENTRETOISE GALV | DISTANZSTUECK 25 37 2 | |
| 86 | B01300104 | SPES. 25,5 37 0,2 | SHIM | ENTRETOISE | BEILAGSCHEIBE 25,5 37 0,2 | |
| 87 | B01300104 | SPES. 25,5 37 0,2 | SHIM | ENTRETOISE | BEILAGSCHEIBE 25,5 37 0,2 | |
| 88 | B01300105 | SPES. 25,5 37 0,5 | SHIM | ENTRETOISE | DISTANZSTUECK 25,5 37 0,5 | |
| 89 | B0C6P0205 | SPES. 13X30X1 | SHIM | ENTRETOISE | DICHTUNG 13X30X1 | |

# TAV_075

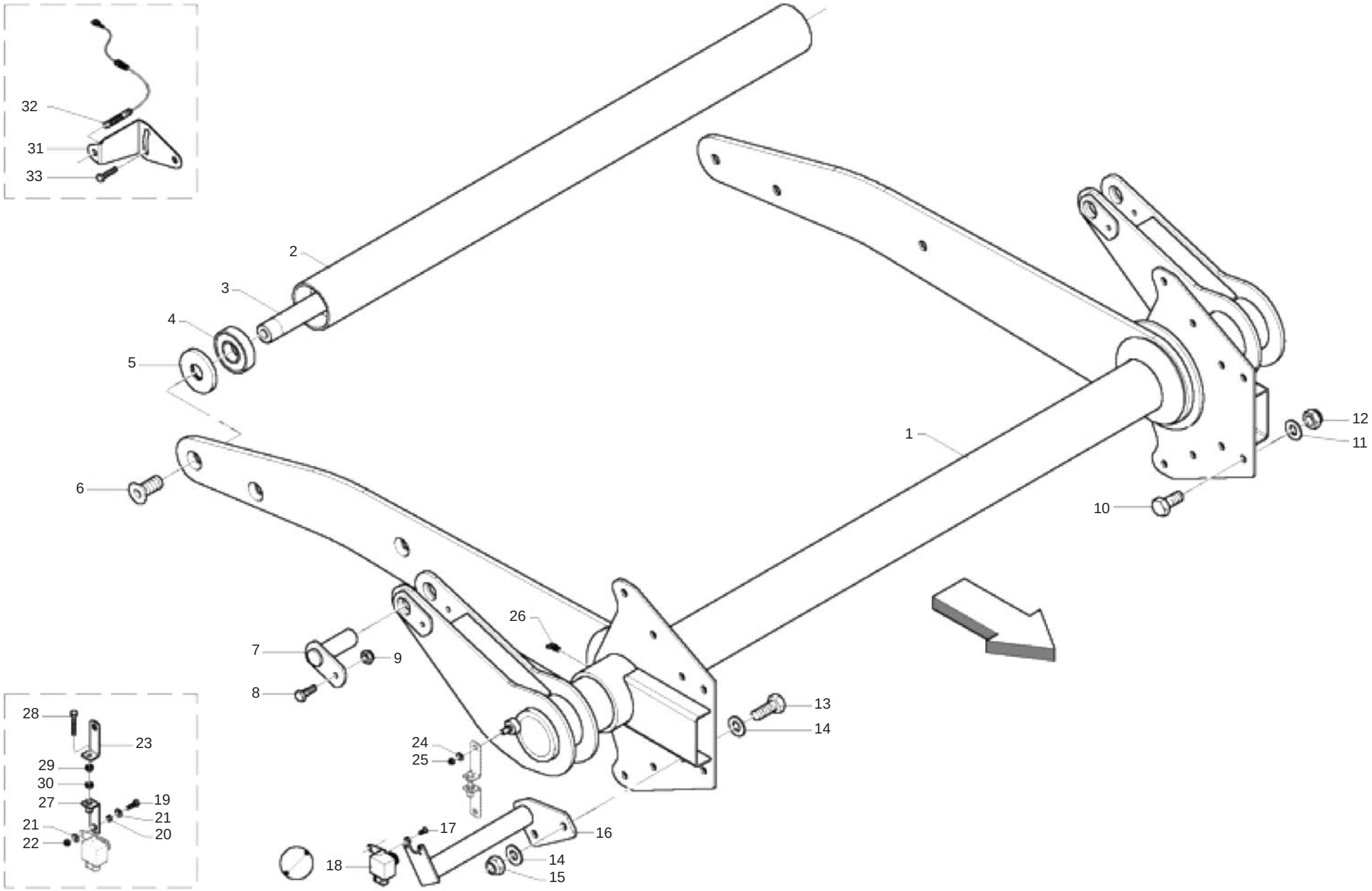




MASCHIO

cod. F07022223

# BILANCIERE
# BELT TENSIONER ARM

TAV_075

| Pos. | Cod. | Descrizione | Description | Description | Benennung | Descripcion |
|---|---|---|---|---|---|---|
| 1 | B07S01630 | BRACCIO TENDICINGHIE 265 | BELT TENSIONER ARM 265 | TENDEUR DE COURROIE 265 | GURTENSPANNERARM 265 | |
| 2 | B03500165 | RULLO FOLLE | IDLE ROLLER | ROULEAU FOU | UMLENKWALZE | |
| 3 | B03500213 | ALBERO CORTO | SHORT SHAFT | ARBRE COURT | KURZE WELLE | |
| 4 | B02040002 | CUSCINETTO 6307-2RS CAT.KST004 | BEARING | ROULEMENT | LAGER 6307-2RS | |
| 5 | B01300623 | CHIUSURA RULLI FOLLI | IDLE ROLLER LOCK | FERMETURE ROULEAUX FOUX | UMLENKWALZENVERSCHLUSS | |
| 6 | F01030148 | VITE M16X2X35 U5933 10.9ZD | SCREW M16X2X35 U5933 10.9ZD | VIS M16X2X35 U5933 10.9ZD | SCHRAUBE M16X2X35 U5933 10.9ZD | TORNILLO M16X2X35 U5933 10.9ZD |
| 7 | B07S00936 | SPINA MARTINETTO PRESS.BALLA | JACK PIN | AXE VERIN | ZYLINDERBOLZEN | |
| 8 | F01020065 | VITE M 8X1,25X 30 U5737 8.8ZN | SCREW M 8X1,25X 30 U5737 8.8Z | | | |
| 9 | B00920208 | DADO M8X1 D985 8ZN | NUT M8X1 D985 8ZN | ECROU | SELBSTSICHERNDE MUTTER M8-5S | |
| 10 | F01020510 | VITE M12X1,75X30 U5739 8.8ZN | SCR. M12X1,75X30 U5739 8.8ZN | VIS M12X1,75X30 U5739 8.8ZN | SCHRAU.M12X1,75X30 U5739 8.8ZN | TORN. M12X1,75X30 U5739 8.8ZN |
| 11 | F01410076 | ROS.M12 13X 20X2,0 U1749 ZN | WASHER | RONDELLE | SCHEIBE | |
| 12 | B00920412 | DADO M12X1,75 D985 8 ZN | NUT | ECROU | SELBSTSICHERNDE MUTTER M12-5S | |
| 13 | F01020512 | VITE M12X1,75X35 U5739 8.8ZN | SCR. M12X1,75X35 U5739 8.8ZN | VIS M12X1,75X35 5739 8.8 ZN | SCHR. M12X1,75X35 5739 8.8 ZN | TORN. M12X1,75X35 5739 8.8 ZN |
| 14 | F01410076 | ROS.M12 13X 20X2,0 U1749 ZN | WASHER | RONDELLE | SCHEIBE | |
| 15 | B00920412 | DADO M12X1,75 D985 8 ZN | NUT | ECROU | SELBSTSICHERNDE MUTTER M12-5S | |
| 16 | B07S01471 | SOSTEGNO POTENZIOMETRO | POTENTIOMETER SUPPORT | SUPPORT POTENTIOMETRE | POTENZIOMETERHALTERUNG | |
| 17 | B00440510 | VITE TSPEI M 5X 10-10.9 UNI 5 | SCREW | VIS | SCHRAUBE TSPEI M5X 10-10.9 | |
| 18 | BZMRP0002 | POTENZIOMETRO DIMENSIONE BALLA | POTENTIOMETER CABLE | POTENTIOMETRE CABLE | POTENTIOMETER ADAPTERKABEL | |
| 19 | B00180620 | VITE M6X1X20 U5739 8.8ZN | SCREW | VIS | SCHRAUBE | |
| 20 | B01300866 | BOCCOLA DI MOVIMENTO | BUSH | DOUILLE | BUCHSE | |
| 21 | F01420035 | ROS.M6 6,4X 18X1,6 U6593 ZN | WASHER | RONDELLE | SCHEIBE | |
| 22 | B00920106 | DADO M6X1 D985 8ZN | NUT | ECROU | SELBSTSICHERNDE MUTTER M6-5S | |
| 23 | B0C6P0052 | BASE DI REGOLAZIONE | ADJUSTMENT BASE | BASE DE REGLAGE | GRUND EINSTELLUNG | |
| 24 | F01420048 | ROS.M8 8,4X 24X 2 U6593 ZN | WASHER | RONDELLE | SCHEIBE | |
| 25 | B00920208 | DADO M8X1 D985 8ZN | NUT M8X1 D985 8ZN | ECROU | SELBSTSICHERNDE MUTTER M8-5S | |
| 26 | B04211010 | INGRAS HYDR M10X1 45 | GREASE NIPPLE | GRAISSEUR HYDRAULIQUE | SCHMIERNIPPEL M10X1 45 | |
| 27 | B07MP0014 | BASE REGOLAZIONE | ADJSUTMENT BASE | BASE REGLAGE | EINSTELLUNGS BASIS | |
| 28 | F01020413 | VITE M6X1X40 U5739 8.8ZN | SCR. M6X1X40 U5739 8.8ZN | VIS M 6X1X40 | SCHRAUBE M 6X1X40 | TORNILLO M 6X1X40 |
| 29 | F01230184 | DADO M6X1 D985 8ZN | NUT M6X1 D985 8ZN | | | |
| 30 | F01200232 | DADO M6X1 U5588 CL8 ZN | NUT M6X1 U5588 6.8ZN | ECROU 6 UNI 5588 6.8 ZN | MUTTER 6 UNI 5588 6.8 ZN | TUERCA 6 UNI 5588 6.8 ZN |
| 31 | B0C6P0110 | PORTA SENSORE | SENSOR SUPPORT | | | |
| 32 | B0E0P0013 | SENS DIG.SCATOLA E BILANCERE | DIGITAL SENSOR PROXIMITY M12 | CAPTEUR DIGITAL AVEC PROXIMITY | SENSOR MIT PROXIMITY M 12 | |
| 33 | B00180655 | VITE M6X1X 55 U5739 8.8ZN | SCREW | VIS | ZINKSCHRAUBE TE M6X55-8.8 UNI | |

# TAV_080

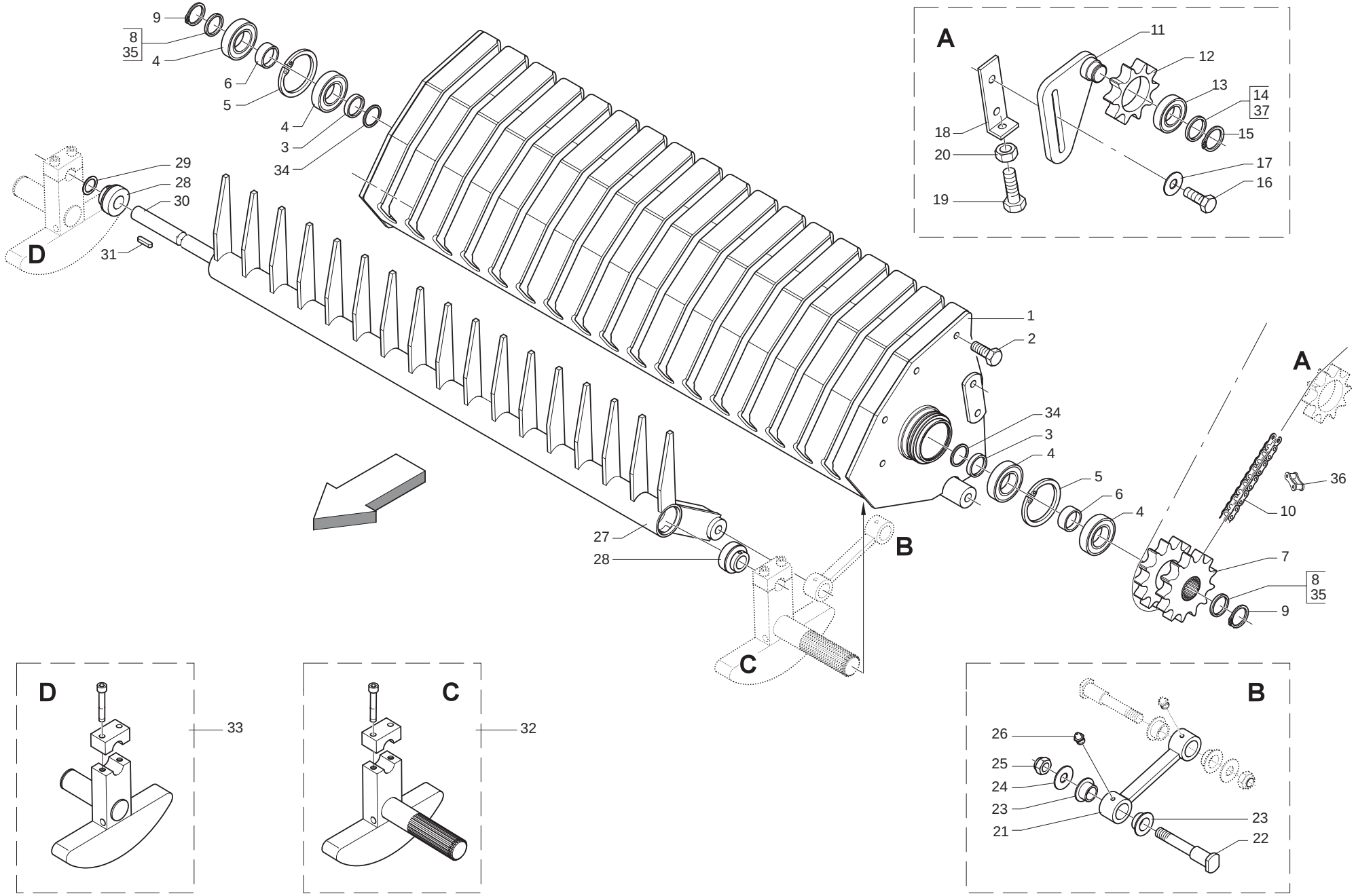
9
8
35
4
6
5
4
3
34
29
28
30
31
D
A
11
12
13
14
37
15
18
20
19
17
16
1
2
34
3
4
5
6
4
27
28
B
C
A
36
10
7
8
35
9
D
33
C
32
B
26
25
24
23
21
23
22

# INFALDATORE
## *FEEDING SYSTEM*

TAV_080

| Pos. | Cod. | Descrizione | Description | Description | Benennung | Descripcion |
|---|---|---|---|---|---|---|
| 1 | B07S00967 | TELAIO INFALDATORE | FEEDING SYSTEM FRAME | CHASSIS AMENEUR | ZUBRINGER RAHMEN | |
| 2 | F01020508 | VITE M12X1,75X 25 U5739 8.8ZN | SCREW | VIS | SCHRAUBE | |
| 3 | B01300605 | DISTANZIALE 35X42X 5 | SPACER | ENTRETOISE | DISTANZSTUECK 35X42X5 | |
| 4 | B02043517 | CUSC.. 6207-2RS CAT.B-ST004 | BEARING | ROULEMENT | LAGER 6207-2RS | |
| 5 | F02050403 | ANELLO E. DI 72X 2,5 U7437 C7 | SEEGER RING E.72X2,5 U7437 C70 | SEEGER E. 72X 2,5 U7437 C70 | SEEGERING E. 72X 2,5 U7437 C70 | ANILLO E. 72X 2,5 U7437 C70 |
| 6 | B01300523 | DISTANZIALE 35X 45X12,5 | SPACER | ENTRETOISE | DISTANZSTUECK 35X45X12,5 | |
| 7 | B03400237 | INGR.DOPPIO Z12-12 1 INFALD. | DOUBLE GEAR Z=12 21 1 FOR RAK | ENGRENAGE DOUBLE | DOPPEL ZAHNRAD Z=12-12 1 | |
| 8 | B01534416 | SPES. 35 43 1 ZINCATO | SHIM | ENTRETOISE | AUSGLEICHSCHEIBE 35X43X1 | |
| 9 | F02050145 | ANELLO E. DE 35X1,5 U7435 C70 | SEEGER RING D.35 | BAGUE SEEGER D.35 | SEEGERRING D.35 | ANILLO SEEGER D.35 |
| 10 | B030E0017 | GIUNTO MOLL N26 ISO 16 B-1 | SPRING JOINT N.26 ISO 16 B-1 | JOINT RESSORT | KETTENFEDER | |
| 11 | B07S00958 | TIRANTE FISSO | TIE ROD | TIRANT FIXE | ZUGSTANGE | |
| 12 | B03400274 | CORONA Z10-1 ISO F52 TRATT | SPROCKET Z=10-1 | ENGRANAGE SPECIAL TRAITE | ZAHNKRANZ Z=10-1 | |
| 13 | F04010170 | CUSC.D25 D52 B15 6205 2RS EX | BEARING D25 D52 B15 6205 2RS | ROULEMENT 6205 2RS | LAGER 6205 2RS | COJINETE 6205 2RS |
| 14 | B01300104 | SPES. 25,5 37 0,2 | SHIM | ENTRETOISE | BEILAGSCHEIBE 25,5 37 0,2 | |
| 15 | F02050101 | ANEL. D ARR. ALB. 25-E UNI3653 | SEEGER RING | BAGUE SEEGER | SEEGERRING 25-E | |
| 16 | F01020152 | VITE M12X1,75X40 U5737 8.8ZN | SCR. M12X1,75X40 U5737 8.8ZN | VIS M12X1,75X40 U5737 8.8 ZN | SCHRAUBE M12X1,75X40U57378.8ZN | TORNIL.M12X1,75X40 U5737 8.8ZN |
| 17 | B01516038 | RALLA 13 32 5 | FIFTH WHEEL | BUTEE | SCHEIBE | |
| 18 | B0C005308 | TIRANTE INFALDATORE | FEEDER TIE ROD | TIRANT AMENEUR | RAFFER ZUSTAB | |
| 19 | F01020521 | VITE M12X1,75X65 U5739 8.8ZN | SCR. M12X1,75X65 U5739 8.8ZN | VIS M12X1,75X65 U5739 8.8ZN | SCHRAU.M12X1,75X65 U5739 8.8ZN | TORN.M12X1,75X65 U5739 8.8ZN |
| 20 | F01200293 | DADO M12X1,75 U5588 CL8 ZN | NUT M12X1,75 U5588 6S ZN | ECROU M12X1,75 U5588 6S ZN | MUTTER M12X1,75 U5588 6S ZN | TUERCA M12X1,75 U5588 6S ZN |
| 21 | B07S00966 | BIELLA INFALDATORE | FEEDER CONNECTING ROD | BIELLE AMENEUR | RAFFERPLEUELSTANGE | |
| 22 | B035P0159 | PERNO BIELLA INFALDATORE | CONNECTING ROD PIN | TOURILLON BIELLE | PLEUELZAPFEN | |
| 23 | B02500002 | BUSSOLA NYLON INFAL.22X28X16,5 | BUSH NYLON 22X28X16,5 | DOUILLE EN NYLON 22X28X16,5 | NYLONBUCHSE | |
| 24 | B0C6P1263 | RALLA PERNO INFALD. | WASHER | BUTEE | SCHEIBE | |
| 25 | B00920516 | DADO M16X 1,5 D985 6S ZN | NUT M16X1,5 D985 6S ZN | ECROU | SELBSTSICHERNDE MUTTER M16-5S | |
| 26 | F01100011 | ING.M 6X1 7663-A 9SMNPB28 ZN | GREASE NIPPLE M6X1 7663-A ZN | GRAISS. A BILLE M6X1 7663A ZN | SCHMIERBUECHE M6X1 7663-A ZN | ENGRAS. DE ESFE. M6X1 7663-AZN |
| 27 | B07S00983 | INFALDATORE NL | FEEDER | AMENEUR | RAFFER | |
| 28 | B07S00126 | CUSCINETTO CON RALLA INFALDAT. | BEARING WITH FIFTH WHEEL | ROULEMENT AVEC BUTEE | LAGER MIT RING | |
| 29 | B01300106 | SPES. 25,5 37 1 ZINCATO | SHIM GALV | ENTRETOISE GALV | DISTANZSTUECK 25,5 37 1 | |
| 30 | B03500038 | ALBERO INFALDATORE | FEEDER SHAFT | ARBRE AMENEUR | RAFFER ANTRIEBSWELLE | |
| 31 | F02150063 | LINGUETTA 8X 7X 22 U6604A | TANG 8X 7X 22 U6604A | | | |
| 32 | B07S00978 | BIELLA MOTORE INFALDATORE | MOTOR CONNECTING ROD | BIELLE MOTEUR AMENEUR | RAFFER TREIBSTANGE | |
| 33 | B07S00979 | BIELLA FOLLE INFALDATORE | IDLE CONNECTING ROD | BIELLE FOLLE AMENEUR | RAFFER UMLENKSTANGE | |
| 34 | B01522427 | SPES. 35 47 2 | SHIM | ENTRETOISE | SCHEIBE | |
| 35 | B01534415 | SPES. 35 43 0,5 ZINCATO | SHIM | ENTRETOISE | AUSGLEICHSCHEIBE 35X43X0,5 | |
| 36 | B030E1039 | CATENA RULLI ISO 16 B-1 39M | ROLLER CHAIN ISO16 B-1 39M | CHAINE ROULEAUX | WALZENKETTE ISO 16 B-1 39M | |
| 37 | B01300104 | SPES. 25,5 37 0,2 | SHIM | ENTRETOISE | BEILAGSCHEIBE 25,5 37 0,2 | |

TAV_085

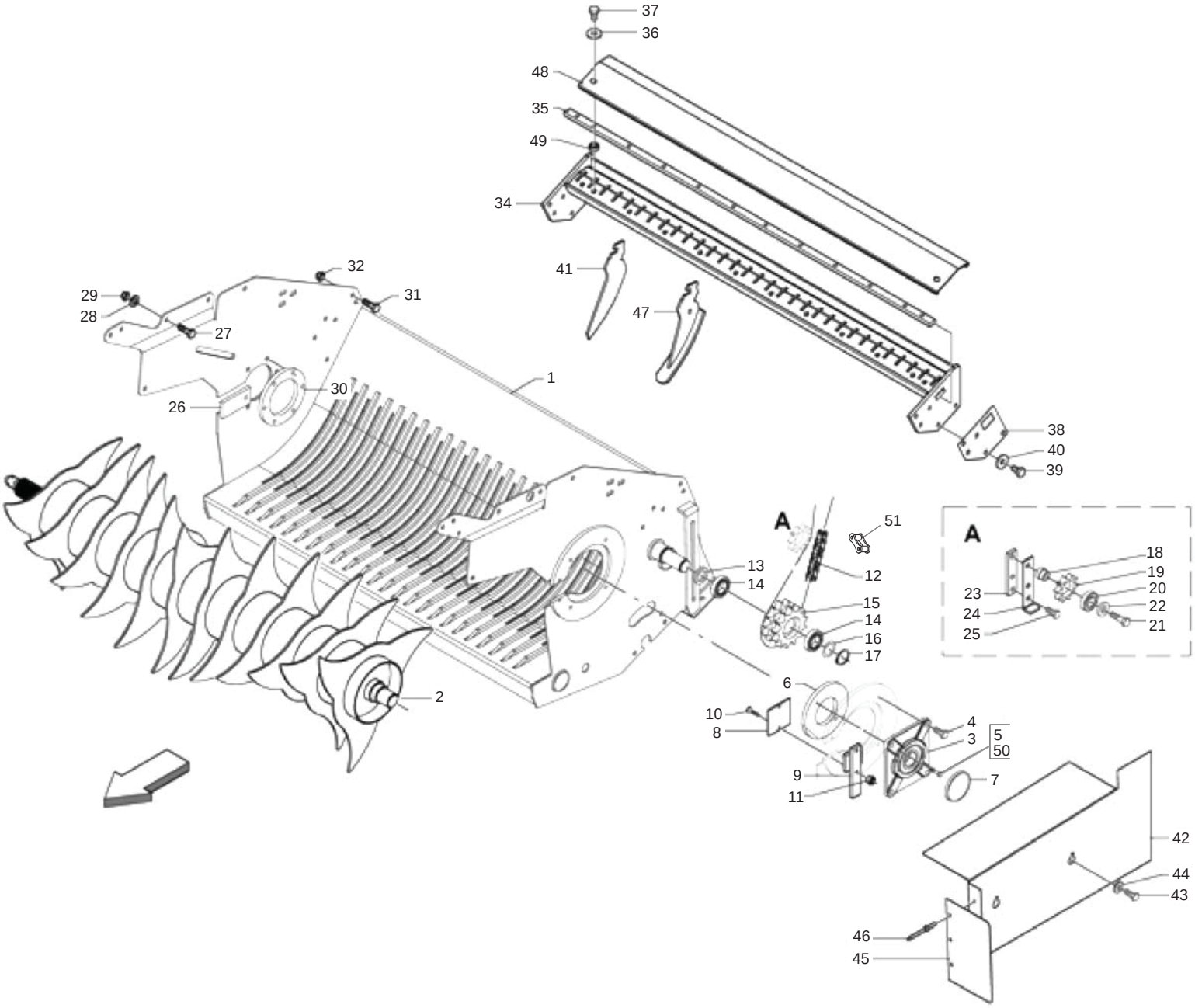




MASCHIO

cod. F07022223

# ROTOR: TELAIO + ROTORE
## *ROTOR: FRAME + ROTOR*

TAV_085

| Pos. | Cod. | Descrizione | Description | Description | Benennung | Descripcion |
|---|---|---|---|---|---|---|
| 1 | B07SP0290 | TELAIO ROTOR | ROTOR FRAME | | | |
| 2 | B07SP0289 | ROTORE CON DISCHI | ROTOR BLADES | | | |
| 3 | B02700153 | SUPPORTO FLANGIATO | FLANGED SUPPORT | SUPPORT POUR ROTOR CUT | FLANSCHLAGER | |
| 4 | F01020510 | VITE M12X1,75X30 U5739 8.8ZN | SCR. M12X1,75X30 U5739 8.8ZN | VIS M12X1,75X30 U5739 8.8ZN | SCHRAU.M12X1,75X30 U5739 8.8ZN | TORN. M12X1,75X30 U5739 8.8ZN |
| 5 | F01410051 | ROS.M8 8,4X 17X1,6 U6592 ZN | WASHER M8 8,4X17X1,6 U6592 ZN | RONDELLE | SCHEIBE | |
| 6 | B01300714 | CONTROFLANGIA SUPP. FOLLE | IDLE SUPPORT COUNTERFLANGE | CONTRE-BRISE SUPPORT FOU | GEGENFLANSCH | |
| 7 | B04400001 | CAP. CHIUSO 110X10 TIPO C | CAP | COUVERCLE | GESCHLOSSENE KAPPE | |
| 8 | B0C003746 | COMPENSO FESSURA SX | LEFT SLOT COMPENSATION | EPAISSEURE FENTE GAUCHE | LINKER SPALTENAUSGLEICH | |
| 9 | B07SP0046 | FERMO COMPENSO LATO SX | LEFT SIDE SHIM LOCK | ARRET EPAISSEUR COTE GAUCHE | VERDICHTUNG BLOCK | |
| 10 | F01030060 | VITE M8X1,25X35 U5933 10.9ZD | SCREW M8X1,25X35 U5933 10.9ZD | VIS M8X1,25X35 U5933 10.9ZD | SCHRA.M8X1,25X35 U5933 10.9ZD | TORN. M8X1,25X35 U5933 10.9ZD |
| 11 | B00920208 | DADO M8X1 D985 8ZN | NUT M8X1 D985 8ZN | ECROU | SELBSTSICHERNDE MUTTER M8-5S | |
| 12 | B030E0017 | GIUNTO MOLL N26 ISO 16 B-1 | SPRING JOINT N.26 ISO 16 B-1 | JOINT RESSORT | KETTENFEDER | |
| 13 | B01330957 | DISTANZIALE 35-48-7 | SPACER | ENTRETOISE | DISTANZSTUECK 35X48X7 | |
| 14 | B02043514 | CUSC.. 6007-2RS CAT.B-ST004 | BEARING | ROULEMENT | LAGER 6007-2RS | |
| 15 | B03400005 | CORONA Z-12 12 1 | SPROCKET Z-12 12 1 | COURONNE | KRANZ Z-12 12 1 | |
| 16 | B01534416 | SPES. 35 43 1 ZINCATO | SHIM | ENTRETOISE | AUSGLEICHSCHEIBE 35X43X1 | |
| 17 | B01700035 | ANEL. D ARR. ALB. 35-E UNI3653 | SEEGER RING | BAGUE SEEGER | SEEGERRING 35-E | |
| 18 | B01300302 | PERNO GALOPPINO | PIN | TOURILLON | BOLZEN FUER KETTENZAHNRAD | |
| 19 | B03400274 | CORONA Z10-1 ISO F52 TRATT | SPROCKET Z=10-1 | ENGRANAGE SPECIAL TRAITE | ZAHNKRANZ Z=10-1 | |
| 20 | F04010170 | CUSC.D25 D52 B15 6205 2RS EX | BEARING D25 D52 B15 6205 2RS | ROULEMENT 6205 2RS | LAGER 6205 2RS | COJINETE 6205 2RS |
| 21 | F01020160 | VITE M12X1,75X60 U5737 8.8ZN | SCR. M12X1,75X60 U5737 8.8ZN | VIS M12X1,75X60 U5737 8.8 ZN | SCHRA.M12X1,75X60 U5737 8.8 ZN | TORN. M12X1,75X60 U5737 8.8 ZN |
| 22 | B01518412 | RALLA 12 38 5 | FIFTH WHEEL | BUTEE | SCHEIBE | |
| 23 | B0C002390 | FERMO | LOCK | ARRET | ARRETIERUNG | |
| 24 | B0C002389 | REGISTRO | REGISTER | VANNE | STELLVORRICHTUNG | |
| 25 | F01020510 | VITE M12X1,75X30 U5739 8.8ZN | SCR. M12X1,75X30 U5739 8.8ZN | VIS M12X1,75X30 U5739 8.8ZN | SCHRAU.M12X1,75X30 U5739 8.8ZN | TORN. M12X1,75X30 U5739 8.8ZN |
| 26 | B0C003748 | COMPENSO FESSURA DX | RIGHT SLOT COMPENSATION | EPAISSEUR FENTE DROITE | RECHTER SPALTENAUSGLEICH | |
| 27 | F01020510 | VITE M12X1,75X30 U5739 8.8ZN | SCR. M12X1,75X30 U5739 8.8ZN | VIS M12X1,75X30 U5739 8.8ZN | SCHRAU.M12X1,75X30 U5739 8.8ZN | TORN. M12X1,75X30 U5739 8.8ZN |
| 28 | F01410076 | ROS.M12 13X 20X2,0 U1749 ZN | WASHER | RONDELLE | SCHEIBE | |
| 29 | F01230059 | DADO M12X1,75 D982 8ZN | LOCK-NUT M12X1,75 D982 8ZN | ECR.AUTO-FREI.M12X1,75 ZN | SICHERUNGMUT.M12X1,75 D982 8ZN | TUER.DE SEGUR.M12X1,75 D982 ZN |
| 30 | B01300509 | CONTROFLANGIA SUPP. MOT. | MOTOR SUPPORT COUNTERFLANGE | CONTRE-FLASQUE SUPPORT MOTEUR | MOTORHALTERGEGENFLANSCH | |
| 31 | F01020514 | VITE M12X1,75X40 U5739 8.8ZN | SCR. M12X1,75X40 U5739 8.8ZN | VIS M12X1,75X40 U5739 8.8ZN | SCHRA. M12X1,75X40 U5739 8.8ZN | TORN. M12X1,75X40 U5739 8,8ZN |
| 32 | F01230059 | DADO M12X1,75 D982 8ZN | LOCK-NUT M12X1,75 D982 8ZN | ECR.AUTO-FREI.M12X1,75 ZN | SICHERUNGMUT.M12X1,75 D982 8ZN | TUER.DE SEGUR.M12X1,75 D982 ZN |
| 34 | B07S01801 | TRAVERSA TOPCUT NEW | CROSS BAR | TRAVERSE TOPCUT NEW | QUERTRAEGER | |
| 35 | B0C005018 | ASTA DI SOSTEGNO | SUPPORT ROD | BARRE DE SUPPORT | STUETZSTANGE | |
| 36 | F01410062 | ROS.M10 10,5X 18X 2 U6592 ZN | WASHER M10 10,5X 18X 2 U6592 | RONDELLE M10 10,5X18X2 ZN | DICHTUNGSRING M10 10,5X18X2 ZN | RONDANA M10 10,5X18X2 ZN |
| 37 | F01020476 | VITE M10X1,5X30 U5739 8.8ZN | SCR. M10X1,5X30 U5739 8.8ZN | VIS M10X1,5X30 U5739 8.8 ZN | SCHRAUBE M10X1,5X30U5739 8.8ZN | TORNIL.M10X1,5X30 U5739 8.8 ZN |
| 38 | B0C003616 | SPES. TRAVERSA RASCHIATORI | SCRAPER CROSS MEMBER SHIM | EPAISSEUR TRAVERSE RACLEUR | ABSTREIFER TRAEGER DISTANZSCHE | |
| 39 | F01020508 | VITE M12X1,75X 25 U5739 8.8ZN | SCREW | VIS | SCHRAUBE | |
| 40 | B01515797 | RALLA 13 25 5 | FIFTH WHEEL | BUTEE | SCHEIBE | |
| 41 | B0C003977 | RASCHIATORE SMONTABILE | DETACHABLE SCRAPER | RACLEUR DEMONTABLE | DEMONTIERBARER ABSTREIFER | |
| 42 | B0C005268G | CARTER CUT | CUT GUARD | | | |
| 43 | F01020436 | VITE M8X1,25X20 U5739 8.8ZN | SCR. M8X1,25X20 U5739 8.8ZN | VIS M8X1,25X 20 U5739 8.8 ZN | SCHRAUBE M8X1,25X20U5739 8.8ZN | TORN. M8X1,25X20 U5739 8.8 ZN |
| 44 | F01410051 | ROS.M8 8,4X 17X1,6 U6592 ZN | WASHER M8 8,4X17X1,6 U6592 ZN | RONDELLE | SCHEIBE | |
| 45 | B0C004239 | PROLUNGA CARTER CUT | CUT GUARD EXTENSION | RALLONGE CARTER CUT | VERLAENGERUNG CARTER CUT | |
| 46 | F02250111 | RIVETTO STR. 4 X 6 U9200A AL | RIVET 4 X6 | RIVET 4 X6 | KUPFERNIET 4 X6 | REMACHE 4 X6 |
| 47 | B07SP0298 | RASCHIATORE E PATTINO HTR | SCRAPER | | | |
| 48 | B0C3P0153 | PROTEZIONI RASCHIATORI | PROTECTION | PROTECTION | SCHEUTZ ABSTERIFER | |
| 49 | B013C0126 | DISTANZIALE | SPACER | ENTRETOISE | DISTANZSTUECK | |
| 50 | B00190850 | VITE M 8X1,25X 50 U5737 8.8ZN | SCREW | VIS | VERZINKTE SCHRAUBE | |
| 51 | B030E1039 | CATENA RULLI ISO 16 B-1 39M | ROLLER CHAIN ISO16 B-1 39M | CHAINE ROULEAUX | WALZENKETTE ISO 16 B-1 39M | |

TAV_090

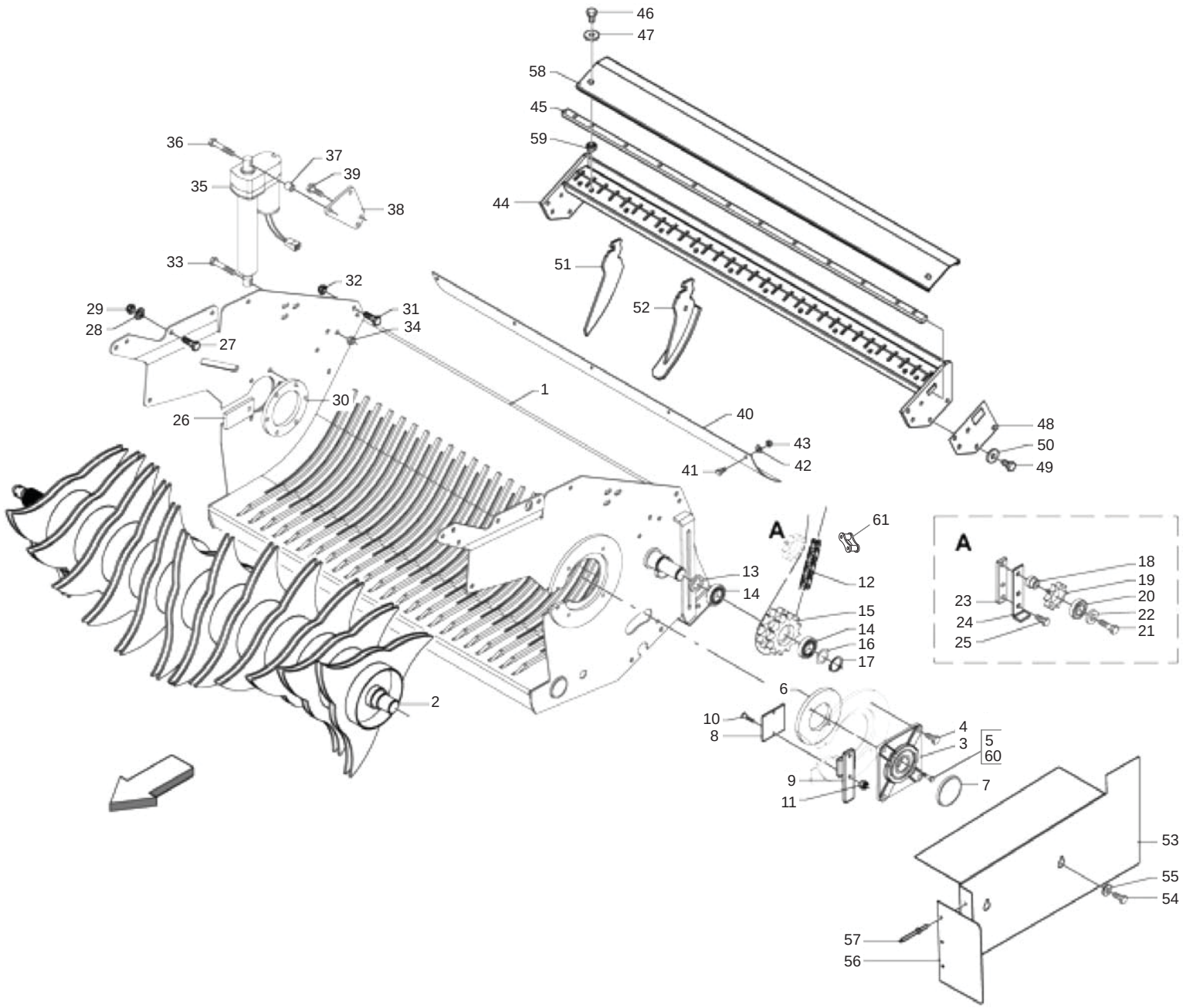




MASCHIO

cod. F07022223

# CUT 13: TELAIO + ROTORE
## *CU 13: FRAME + ROTOR*

TAV_090

| Pos. | Cod. | Descrizione | Description | Description | Benennung | Descripcion |
|---|---|---|---|---|---|---|
| 1 | B07S01791 | TELAIO TOPCUT NEW | NEW TOPCUT FRAME | | | |
| 2 | B07S01944 | ROT. CON DISCHI A 3 PUNTE HTC | ROTOR WITH 3 POINTED DISCS HTC | ROTOR AVEC DISQUES A 3 POINTS | ROTOR MIT SCHEIBEN | |
| 3 | B02700153 | SUPPORTO FLANGIATO | FLANGED SUPPORT | SUPPORT POUR ROTOR CUT | FLANSCHLAGER | |
| 4 | F01020510 | VITE M12X1,75X30 U5739 8.8ZN | SCR. M12X1,75X30 U5739 8.8ZN | VIS M12X1,75X30 U5739 8.8ZN | SCHRAU.M12X1,75X30 U5739 8.8ZN | TORN. M12X1,75X30 U5739 8.8ZN |
| 5 | B00190850 | VITE M 8X1,25X 50 U5737 8.8ZN | SCREW | VIS | VERZINKTE SCHRAUBE | |
| 6 | B01300714 | CONTROFLANGIA SUPP. FOLLE | IDLE SUPPORT COUNTERFLANGE | CONTRE-BRISE SUPPORT FOU | GEGENFLANSCH | |
| 7 | B04400001 | CAP. CHIUSO 110X10 TIPO C | CAP | COUVERCLE | GESCHLOSSENE KAPPE | |
| 8 | B0C003746 | COMPENSO FESSURA SX | LEFT SLOT COMPENSATION | EPAISSEURE FENTE GAUCHE | LINKER SPALTENAUSGLEICH | |
| 9 | B07SP0046 | FERMO COMPENSO LATO SX | LEFT SIDE SHIM LOCK | ARRET EPAISSEUR COTE GAUCHE | VERDICHTUNG BLOCK | |
| 10 | F01030060 | VITE M8X1,25X35 U5933 10.9ZD | SCREW M8X1,25X35 U5933 10.9ZD | VIS M8X1,25X35 U5933 10.9ZD | SCHRA.M8X1,25X35 U5933 10.9ZD | TORN. M8X1,25X35 U5933 10.9ZD |
| 11 | B00920208 | DADO M8X1 D985 8ZN | NUT M8X1 D985 8ZN | ECROU | SELBSTSICHERNDE MUTTER M8-5S | |
| 12 | B030E0017 | GIUNTO MOLL N26 ISO 16 B-1 | SPRING JOINT N.26 ISO 16 B-1 | JOINT RESSORT | KETTENFEDER | |
| 13 | B01330957 | DISTANZIALE 35-48-7 | SPACER | ENTRETOISE | DISTANZSTUECK 35X48X7 | |
| 14 | B02043514 | CUSC.. 6007-2RS CAT.B-ST004 | BEARING | ROULEMENT | LAGER 6007-2RS | |
| 15 | B03400005 | CORONA Z-12 12 1 | SPROCKET Z-12 12 1 | COURONNE | KRANZ Z-12 12 1 | |
| 16 | B01534416 | SPES. 35 43 1 ZINCATO | SHIM | ENTRETOISE | AUSGLEICHSCHEIBE 35X43X1 | |
| 17 | B01700035 | ANEL. D ARR. ALB. 35-E UNI3653 | SEEGER RING | BAGUE SEEGER | SEEGERRING 35-E | |
| 18 | B01300302 | PERNO GALOPPINO | PIN | TOURILLON | BOLZEN FUER KETTENZAHNRAD | |
| 19 | B03400274 | CORONA Z10-1 ISO F52 TRATT | SPROCKET Z=10-1 | ENGRANAGE SPECIAL TRAITE | ZAHNKRANZ Z=10-1 | |
| 20 | F04010170 | CUSC.D25 D52 B15 6205 2RS EX | BEARING D25 D52 B15 6205 2RS | ROULEMENT 6205 2RS | LAGER 6205 2RS | COJINETE 6205 2RS |
| 21 | F01020160 | VITE M12X1,75X60 U5737 8.8ZN | SCR. M12X1,75X60 U5737 8.8ZN | VIS M12X1,75X60 U5737 8.8 ZN | SCHRA.M12X1,75X60 U5737 8.8 ZN | TORN. M12X1,75X60 U5737 8.8 ZN |
| 22 | B01518412 | RALLA 12 38 5 | FIFTH WHEEL | BUTEE | SCHEIBE | |
| 23 | B0C002390 | FERMO | LOCK | ARRET | ARRETIERUNG | |
| 24 | B0C002389 | REGISTRO | REGISTER | VANNE | STELLVORRICHTUNG | |
| 25 | F01020510 | VITE M12X1,75X30 U5739 8.8ZN | SCR. M12X1,75X30 U5739 8.8ZN | VIS M12X1,75X30 U5739 8.8ZN | SCHRAU.M12X1,75X30 U5739 8.8ZN | TORN. M12X1,75X30 U5739 8.8ZN |
| 26 | B0C003748 | COMPENSO FESSURA DX | RIGHT SLOT COMPENSATION | EPAISSEUR FENTE DROITE | RECHTER SPALTENAUSGLEICH | |
| 27 | F01020510 | VITE M12X1,75X30 U5739 8.8ZN | SCR. M12X1,75X30 U5739 8.8ZN | VIS M12X1,75X30 U5739 8.8ZN | SCHRAU.M12X1,75X30 U5739 8.8ZN | TORN. M12X1,75X30 U5739 8.8ZN |
| 28 | F01410076 | ROS.M12 13X 20X2,0 U1749 ZN | WASHER | RONDELLE | SCHEIBE | |
| 29 | F01230059 | DADO M12X1,75 D982 8ZN | LOCK-NUT M12X1,75 D982 8ZN | ECR.AUTO-FREI.M12X1,75 ZN | SICHERUNGMUT.M12X1,75 D982 8ZN | TUER.DE SEGUR.M12X1,75 D982 Z |
| 30 | B01300509 | CONTROFLANGIA SUPP. MOT. | MOTOR SUPPORT COUNTERFLANGE | CONTRE-FLASQUE SUPPORT MOTEUR | MOTORHALTERGEGENFLANSCH | |
| 31 | F01020514 | VITE M12X1,75X40 U5739 8.8ZN | SCR. M12X1,75X40 U5739 8.8ZN | VIS M12X1,75X40 U5739 8.8ZN | SCHRA. M12X1,75X40 U5739 8.8ZN | TORN. M12X1,75X40 U5739 8,8ZN |
| 32 | F01230059 | DADO M12X1,75 D982 8ZN | LOCK-NUT M12X1,75 D982 8ZN | ECR.AUTO-FREI.M12X1,75 ZN | SICHERUNGMUT.M12X1,75 D982 8ZN | TUER.DE SEGUR.M12X1,75 D982 Z |
| 33 | F01020519 | VITE M12X1,75X 60 U5739 8.8ZN | SCREW M12X1,75X 60 U5739 8.8ZN | | | |
| 34 | F01230059 | DADO M12X1,75 D982 8ZN | LOCK-NUT M12X1,75 D982 8ZN | ECR.AUTO-FREI.M12X1,75 ZN | SICHERUNGMUT.M12X1,75 D982 8ZN | TUER.DE SEGUR.M12X1,75 D982 Z |
| 35 | B0E000064 | ATTUATORE COLTELLI | KNIVES ACTUATOR D12 21B5 04 | ACTIONNEUR | E-MOTOR WARNER D12 21B5 04 | |
| 36 | F01020524 | VITE M12X1,75X90 U5739 8.8ZN | SCR. M12X1,75X90 U5739 8.8ZN | | | |
| 37 | B01300746 | DISTANZIALE 12,5X21,3X15 | SPACER | | | |
| 38 | B07S01203 | ATTACCO ATTUATORE | ACTUATOR ATTACHMENT | ATTELAGE ACTIONNEUR | E-MOTOR HALTERUNG | |
| 39 | F01040201 | VITE M12X1,75X 35 8.8 U5931 Z | SCREW M12X1,75X 35 8.8 U5931 Z | | | |
| 40 | B07V00092 | PROT. MOLLE COLT. | KNIFE SPRING PROTECTION | PROTECTION RESSORTS COUTEAUX | MESSERFEDERSCHUTZ | |
| 41 | F01020436 | VITE M8X1,25X20 U5739 8.8ZN | SCR. M8X1,25X20 U5739 8.8ZN | VIS M8X1,25X 20 U5739 8.8 ZN | SCHRAUBE M8X1,25X20U5739 8.8ZN | TORN. M8X1,25X20 U5739 8.8 ZN |
| 42 | F01420049 | ROS.M8 8,4X 32X 2 U6593 ZN | WASHER M8 8,4X32X2 U6593 ZN | RONDELLA M8 8,4X32X2 U6593 ZN | SCHEIBE M8 8,4X32X2 U6593 ZN | ARANDELA M8 8,4X32X2 U6593 ZN |
| 43 | B00920208 | DADO M8X1 D985 8ZN | NUT M8X1 D985 8ZN | ECROU | SELBSTSICHERNDE MUTTER M8-5S | |
| 44 | B07S01801 | TRAVERSA TOPCUT NEW | CROSS BAR | TRAVERSE TOPCUT NEW | QUERTRAEGER | |
| 45 | B0C005018 | ASTA DI SOSTEGNO | SUPPORT ROD | BARRE DE SUPPORT | STUETZSTANGE | |
| 46 | F01020476 | VITE M10X1,5X30 U5739 8.8ZN | SCR. M10X1,5X30 U5739 8.8ZN | VIS M10X1,5X30 U5739 8.8 ZN | SCHRAUBE M10X1,5X30U5739 8.8ZN | TORNIL.M10X1,5X30 U5739 8.8 ZN |
| 47 | F01410062 | ROS.M10 10,5X 18X 2 U6592 ZN | WASHER M10 10,5X 18X 2 U6592 | RONDELLE M10 10,5X18X2 ZN | DICHTUNGSRING M10 10,5X18X2 ZN | RONDANA M10 10,5X18X2 ZN |
| 48 | B0C003616 | SPES. TRAVERSA RASCHIATORI | SCRAPER CROSS MEMBER SHIM | EPAISSEUR TRAVERSE RACLEUR | ABSTREIFER TRAEGER DISTANZSCHE | |
| 49 | F01020508 | VITE M12X1,75X 25 U5739 8.8ZN | SCREW | VIS | SCHRAUBE | |
| 50 | B01515797 | RALLA 13 25 5 | FIFTH WHEEL | BUTEE | SCHEIBE | |
| 51 | B0C6P0263 | RASCHIATORE | DETACHABLE SCRAPER | RACLEUR DEMONTABLE | DEMONTIERBARER ABSTREIFER | |
| 52 | B07SP0241 | RASCHIATORE E PATTINO | SCRAPER AND SLIDING BLOCK | RACLEUR ET PATIN | ABSTREIFER UND GLEITSCHUH | |
| 53 | B0C005268G | CARTER CUT | CUT GUARD | | | |
| 54 | F01020436 | VITE M8X1,25X20 U5739 8.8ZN | SCR. M8X1,25X20 U5739 8.8ZN | VIS M8X1,25X 20 U5739 8.8 ZN | SCHRAUBE M8X1,25X20U5739 8.8ZN | TORN. M8X1,25X20 U5739 8.8 ZN |
| 55 | F01410051 | ROS.M8 8,4X 17X1,6 U6592 ZN | WASHER M8 8,4X17X1,6 U6592 ZN | RONDELLE | SCHEIBE | |
| 56 | B0C004239 | PROLUNGA CARTER CUT | CUT GUARD EXTENSION | RALLONGE CARTER CUT | VERLAENGERUNG CARTER CUT | |
| 57 | F02250111 | RIVETTO STR. 4 X 6 U9200A AL | RIVET 4 X6 | RIVET 4 X6 | KUPFERNIET 4 X6 | REMACHE 4 X6 |

TAV_090

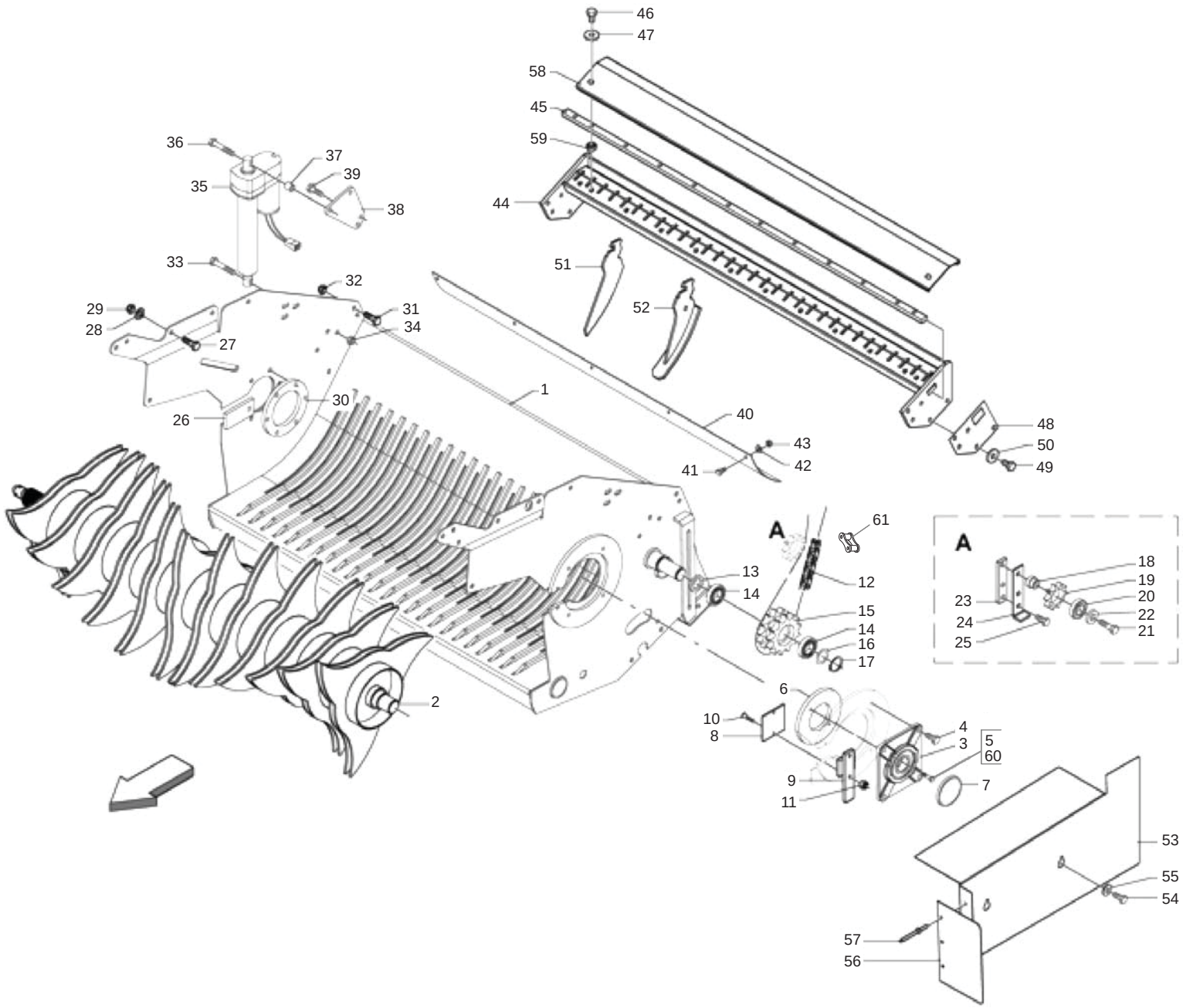




MASCHIO

cod. F07022223

## CUT 13: TELAIO + ROTORE
## *CU 13: FRAME + ROTOR*

TAV_090

| Pos. | Cod. | Descrizione | Description | Description | Benennung | Descripcion |
|---|---|---|---|---|---|---|
| 58 | B0C3P0153 | PROTEZIONI RASCHIATORI | PROTECTION | PROTECTION | SCHEUTZ ABSTERIFER | |
| 59 | B013C0126 | DISTANZIALE | SPACER | ENTRETOISE | DISTANZSTUECK | |
| 60 | F01410051 | ROS.M8 8,4X 17X1,6 U6592 ZN | WASHER M8 8,4X17X1,6 U6592 ZN | RONDELLE | SCHEIBE | |
| 61 | B030E1039 | CATENA RULLI ISO 16 B-1 39M | ROLLER CHAIN ISO16 B-1 39M | CHAINE ROULEAUX | WALZENKETTE ISO 16 B-1 39M | |

TAV_095

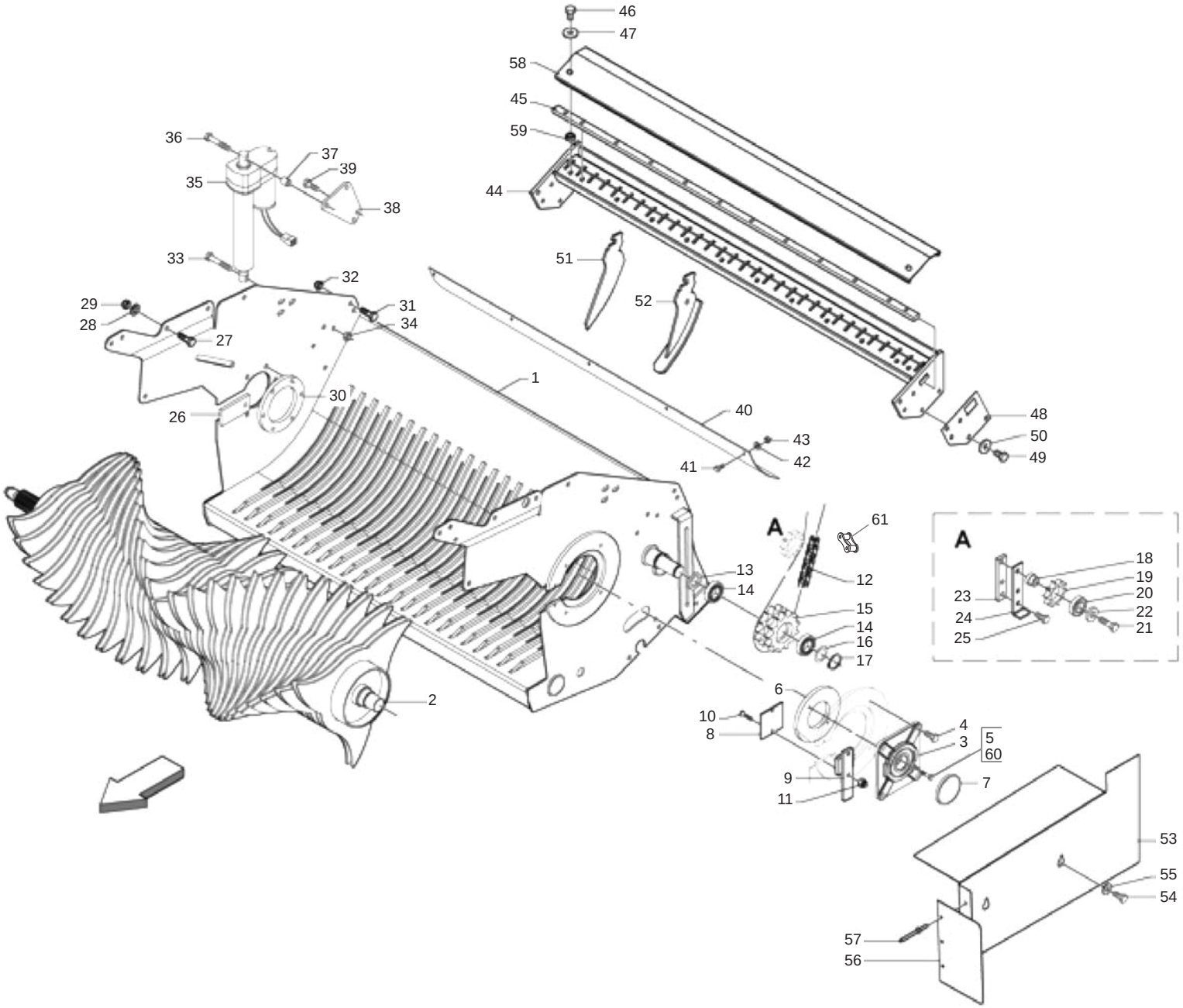




MASCHIO

cod. F07022223

# CUT 25: TELAIO + ROTORE
## *CUT 25: FRAME + ROTOR*

TAV_095

| Pos. | Cod. | Descrizione | Description | Description | Benennung | Descripcion |
|---|---|---|---|---|---|---|
| 1 | B07S01792 | TELAIO ULTRACUT NEW | NEW ULTRACUT FRAME | CHASSIS ULTRACUT | NEUER ULTRACUT RAHMEN | |
| 2 | B07S01127 | ROT. ULTRACUT | ULTRACUT ROTOR | ROTOR ULTRACUT | ULTRACUT ROTOR | |
| 3 | B02700153 | SUPPORTO FLANGIATO | FLANGED SUPPORT | SUPPORT POUR ROTOR CUT | FLANSCHLAGER | |
| 4 | F01020510 | VITE M12X1,75X30 U5739 8.8ZN | SCR. M12X1,75X30 U5739 8.8ZN | VIS M12X1,75X30 U5739 8.8ZN | SCHRAU.M12X1,75X30 U5739 8.8ZN | TORN. M12X1,75X30 U5739 8.8ZN |
| 5 | F01410051 | ROS.M8 8,4X 17X1,6 U6592 ZN | WASHER M8 8,4X17X1,6 U6592 ZN | RONDELLE | SCHEIBE | |
| 6 | B01300714 | CONTROFLANGIA SUPP. FOLLE | IDLE SUPPORT COUNTERFLANGE | CONTRE-BRISE SUPPORT FOU | GEGENFLANSCH | |
| 7 | B04400001 | CAP. CHIUSO 110X10 TIPO C | CAP | COUVERCLE | GESCHLOSSENE KAPPE | |
| 8 | B0C003746 | COMPENSO FESSURA SX | LEFT SLOT COMPENSATION | EPAISSEURE FENTE GAUCHE | LINKER SPALTENAUSGLEICH | |
| 9 | B07SP0046 | FERMO COMPENSO LATO SX | LEFT SIDE SHIM LOCK | ARRET EPAISSEUR COTE GAUCHE | VERDICHTUNG BLOCK | |
| 10 | F01030060 | VITE M8X1,25X35 U5933 10.9ZD | SCREW M8X1,25X35 U5933 10.9ZD | VIS M8X1,25X35 U5933 10.9ZD | SCHRA.M8X1,25X35 U5933 10.9ZD | TORN. M8X1,25X35 U5933 10.9ZD |
| 11 | B00920208 | DADO M8X1 D985 8ZN | NUT M8X1 D985 8ZN | ECROU | SELBSTSICHERNDE MUTTER M8-5S | |
| 12 | B030E1039 | CATENA RULLI ISO 16 B-1 39M | ROLLER CHAIN ISO16 B-1 39M | CHAINE ROULEAUX | WALZENKETTE ISO 16 B-1 39M | |
| 13 | B01330957 | DISTANZIALE 35-48-7 | SPACER | ENTRETOISE | DISTANZSTUECK 35X48X7 | |
| 14 | B02043514 | CUSC.. 6007-2RS CAT.B-ST004 | BEARING | ROULEMENT | LAGER 6007-2RS | |
| 15 | B03400005 | CORONA Z-12 12 1 | SPROCKET Z-12 12 1 | COURONNE | KRANZ Z-12 12 1 | |
| 16 | B01534416 | SPES. 35 43 1 ZINCATO | SHIM | ENTRETOISE | AUSGLEICHSCHEIBE 35X43X1 | |
| 17 | B01700035 | ANEL. D ARR. ALB. 35-E UNI3653 | SEEGER RING | BAGUE SEEGER | SEEGERRING 35-E | |
| 18 | B01300302 | PERNO GALOPPINO | PIN | TOURILLON | BOLZEN FUER KETTENZAHNRAD | |
| 19 | B03400274 | CORONA Z10-1 ISO F52 TRATT | SPROCKET Z=10-1 | ENGRANAGE SPECIAL TRAITE | ZAHNKRANZ Z=10-1 | |
| 20 | F04010170 | CUSC.D25 D52 B15 6205 2RS EX | BEARING D25 D52 B15 6205 2RS | ROULEMENT 6205 2RS | LAGER 6205 2RS | COJINETE 6205 2RS |
| 21 | F01020160 | VITE M12X1,75X60 U5737 8.8ZN | SCR. M12X1,75X60 U5737 8.8ZN | VIS M12X1,75X60 U5737 8.8 ZN | SCHRA.M12X1,75X60 U5737 8.8 ZN | TORN. M12X1,75X60 U5737 8.8 ZN |
| 22 | B01518412 | RALLA 12 38 5 | FIFTH WHEEL | BUTEE | SCHEIBE | |
| 23 | B0C002390 | FERMO | LOCK | ARRET | ARRETIERUNG | |
| 24 | B0C002389 | REGISTRO | REGISTER | VANNE | STELLVORRICHTUNG | |
| 25 | F01020510 | VITE M12X1,75X30 U5739 8.8ZN | SCR. M12X1,75X30 U5739 8.8ZN | VIS M12X1,75X30 U5739 8.8ZN | SCHRAU.M12X1,75X30 U5739 8.8ZN | TORN. M12X1,75X30 U5739 8.8ZN |
| 26 | B0C003748 | COMPENSO FESSURA DX | RIGHT SLOT COMPENSATION | EPAISSEUR FENTE DROITE | RECHTER SPALTENAUSGLEICH | |
| 27 | F01020510 | VITE M12X1,75X30 U5739 8.8ZN | SCR. M12X1,75X30 U5739 8.8ZN | VIS M12X1,75X30 U5739 8.8ZN | SCHRAU.M12X1,75X30 U5739 8.8ZN | TORN. M12X1,75X30 U5739 8.8ZN |
| 28 | F01410076 | ROS.M12 13X 20X2,0 U1749 ZN | WASHER | RONDELLE | SCHEIBE | |
| 29 | F01230059 | DADO M12X1,75 D982 8ZN | LOCK-NUT M12X1,75 D982 8ZN | ECR.AUTO-FREI.M12X1,75 ZN | SICHERUNGMUT.M12X1,75 D982 8ZN | TUER.DE SEGUR.M12X1,75 D982 Z |
| 30 | B01300509 | CONTROFLANGIA SUPP. MOT. | MOTOR SUPPORT COUNTERFLANGE | CONTRE-FLASQUE SUPPORT MOTEUR | MOTORHALTERGEGENFLANSCH | |
| 31 | F01020514 | VITE M12X1,75X40 U5739 8.8ZN | SCR. M12X1,75X40 U5739 8.8ZN | VIS M12X1,75X40 U5739 8.8ZN | SCHRA. M12X1,75X40 U5739 8.8ZN | TORN. M12X1,75X40 U5739 8,8ZN |
| 32 | F01230059 | DADO M12X1,75 D982 8ZN | LOCK-NUT M12X1,75 D982 8ZN | ECR.AUTO-FREI.M12X1,75 ZN | SICHERUNGMUT.M12X1,75 D982 8ZN | TUER.DE SEGUR.M12X1,75 D982 Z |
| 33 | F01020519 | VITE M12X1,75X 60 U5739 8.8ZN | SCREW M12X1,75X 60 U5739 8.8ZN | | | |
| 34 | F01230059 | DADO M12X1,75 D982 8ZN | LOCK-NUT M12X1,75 D982 8ZN | ECR.AUTO-FREI.M12X1,75 ZN | SICHERUNGMUT.M12X1,75 D982 8ZN | TUER.DE SEGUR.M12X1,75 D982 Z |
| 35 | B0E000064 | ATTUATORE COLTELLI | KNIVES ACTUATOR D12 21B5 04 | ACTIONNEUR | E-MOTOR WARNER D12 21B5 04 | |
| 36 | F01020524 | VITE M12X1,75X90 U5739 8.8ZN | SCR. M12X1,75X90 U5739 8.8ZN | | | |
| 37 | B01300746 | DISTANZIALE 12,5X21,3X15 | SPACER | | | |
| 38 | B07S01203 | ATTACCO ATTUATORE | ACTUATOR ATTACHMENT | ATTELAGE ACTIONNEUR | E-MOTOR HALTERUNG | |
| 39 | F01040201 | VITE M12X1,75X 35 8.8 U5931 Z | SCREW M12X1,75X 35 8.8 U5931 Z | | | |
| 40 | B07V00092 | PROT. MOLLE COLT. | KNIFE SPRING PROTECTION | PROTECTION RESSORTS COUTEAUX | MESSERFEDERSCHUTZ | |
| 41 | F01020436 | VITE M8X1,25X20 U5739 8.8ZN | SCR. M8X1,25X20 U5739 8.8ZN | VIS M8X1,25X 20 U5739 8.8 ZN | SCHRAUBE M8X1,25X20U5739 8.8ZN | TORN. M8X1,25X20 U5739 8.8 ZN |
| 42 | F01420048 | ROS.M8 8,4X 24X 2 U6593 ZN | WASHER | RONDELLE | SCHEIBE | |
| 43 | B00920208 | DADO M8X1 D985 8ZN | NUT M8X1 D985 8ZN | ECROU | SELBSTSICHERNDE MUTTER M8-5S | |
| 44 | B07S01847 | TRAVERSA ULTRACUT HT | CROSS BAR | TRAVERSE ULTRACUT HT | QUERTRAEGER | |
| 45 | B0C003981 | TRAVERSINO | LINK STUD | PETITE TRAVERSE | STEG | |
| 46 | F01020476 | VITE M10X1,5X30 U5739 8.8ZN | SCR. M10X1,5X30 U5739 8.8ZN | VIS M10X1,5X30 U5739 8.8 ZN | SCHRAUBE M10X1,5X30U5739 8.8ZN | TORNIL.M10X1,5X30 U5739 8.8 ZN |
| 47 | F01410062 | ROS.M10 10,5X 18X 2 U6592 ZN | WASHER M10 10,5X 18X 2 U6592 | RONDELLE M10 10,5X18X2 ZN | DICHTUNGSRING M10 10,5X18X2 ZN | RONDANA M10 10,5X18X2 ZN |
| 48 | B0C003616 | SPES. TRAVERSA RASCHIATORI | SCRAPER CROSS MEMBER SHIM | EPAISSEUR TRAVERSE RACLEUR | ABSTREIFER TRAEGER DISTANZSCHE | |
| 49 | F01020508 | VITE M12X1,75X 25 U5739 8.8ZN | SCREW | VIS | SCHRAUBE | |
| 50 | B01515797 | RALLA 13 25 5 | FIFTH WHEEL | BUTEE | SCHEIBE | |
| 51 | B0C6P0263 | RASCHIATORE | DETACHABLE SCRAPER | RACLEUR DEMONTABLE | DEMONTIERBARER ABSTREIFER | |
| 52 | B07SP0241 | RASCHIATORE E PATTINO | SCRAPER AND SLIDING BLOCK | RACLEUR ET PATIN | ABSTREIFER UND GLEITSCHUH | |
| 53 | B0C005268G | CARTER CUT | CUT GUARD | | | |
| 54 | F01020436 | VITE M8X1,25X20 U5739 8.8ZN | SCR. M8X1,25X20 U5739 8.8ZN | VIS M8X1,25X 20 U5739 8.8 ZN | SCHRAUBE M8X1,25X20U5739 8.8ZN | TORN. M8X1,25X20 U5739 8.8 ZN |
| 55 | F01410051 | ROS.M8 8,4X 17X1,6 U6592 ZN | WASHER M8 8,4X17X1,6 U6592 ZN | RONDELLE | SCHEIBE | |
| 56 | B0C004239 | PROLUNGA CARTER CUT | CUT GUARD EXTENSION | RALLONGE CARTER CUT | VERLAENGERUNG CARTER CUT | |
| 57 | F02250111 | RIVETTO STR. 4 X 6 U9200A AL | RIVET 4 X6 | RIVET 4 X6 | KUPFERNIET 4 X6 | REMACHE 4 X6 |

TAV_095

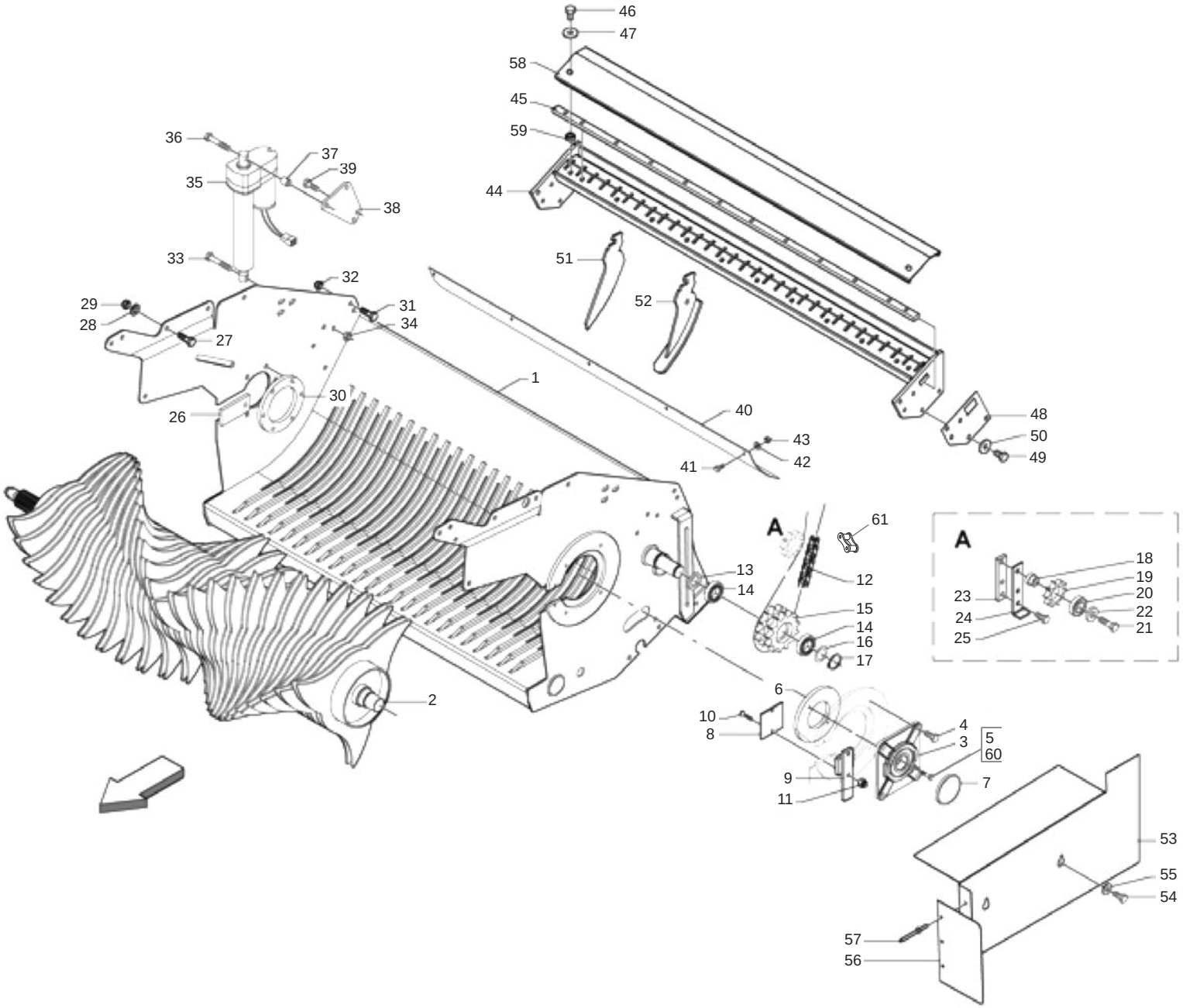




MASCHIO

cod. F07022223

## CUT 25: TELAIO + ROTORE
## *CUT 25: FRAME + ROTOR*

TAV_095

| Pos. | Cod. | Descrizione | Description | Description | Benennung | Descripcion |
|---|---|---|---|---|---|---|
| 58 | B0C3P0153 | PROTEZIONI RASCHIATORI | PROTECTION | PROTECTION | SCHEUTZ ABSTERIFER | |
| 59 | B013C0126 | DISTANZIALE | SPACER | ENTRETOISE | DISTANZSTUECK | |
| 60 | B00190850 | VITE M 8X1,25X 50 U5737 8.8ZN | SCREW | VIS | VERZINKTE SCHRAUBE | |
| 61 | B030E0017 | GIUNTO MOLL N26 ISO 16 B-1 | SPRING JOINT N.26 ISO 16 B-1 | JOINT RESSORT | KETTENFEDER | |

# TAV_100

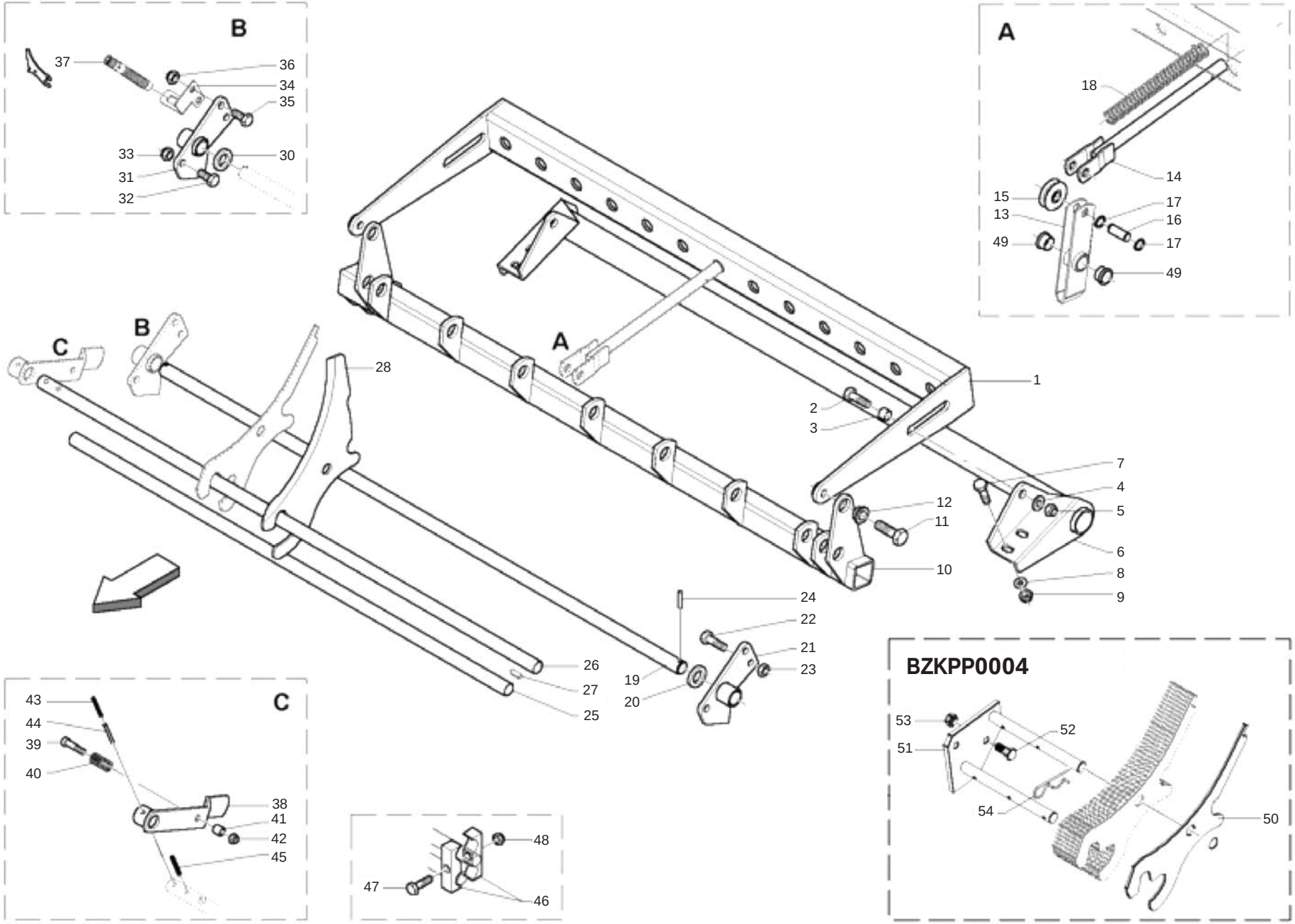




MASCHIO

cod. F07022223

# CUT 13: TRAVERSA COLTELLI
# CUT 13: KNIVES CROSSBAR

TAV_100

| Pos. | Cod. | Descrizione | Description | Description | Benennung | Descripcion |
|---|---|---|---|---|---|---|
| 1 | B07S01802 | CONTRASTO MOLLE TOPCUT | KNIFE RESISTANCE TOPCUT | RESISTENCE DENTS TOPCUT | MESSERWIDERSTAND TOPCUT | |
| 2 | F01020568 | VITE M16X2X45 U5739 8.8ZN | SCR. M16X2X45 U5739 8.8ZN | VIS M 16X 2X45 U5739 8.8 ZG | SCHRAUBE M 16X 2X45 U5739 8.8 | TORNILLO M16X 2X45 U5739 8.8 |
| 3 | B01300745 | DISTANZIALE 16X20X14 | SPACER | ENTRETOISE | DISTANZSTUECK 16X20X14 | |
| 4 | F01410100 | ROS.M16 17X 30X 3 U6592 ZN | WASHER | RONDELLE | SCHEIBE | |
| 5 | B00920516 | DADO M16X 1,5 D985 6S ZN | NUT M16X1,5 D985 6S ZN | ECROU | SELBSTSICHERNDE MUTTER M16-5S | |
| 6 | B07S01636 | COLLEGAMENTO INFERIORE NEW | LOWER CONNECTION | CONNECTION INFERIEURE | UNTERE VERBINDUNG | |
| 7 | F01020508 | VITE M12X1,75X 25 U5739 8.8ZN | SCREW | VIS | SCHRAUBE | |
| 8 | F01410076 | ROS.M12 13X 20X2,0 U1749 ZN | WASHER | RONDELLE | SCHEIBE | |
| 9 | B00920412 | DADO M12X1,75 D985 8 ZN | NUT | ECROU | SELBSTSICHERNDE MUTTER M12-5S | |
| 10 | B07S01803 | COM. COLT. TOPCUT | KNIFE CONTROL TOPCUT | COMMANDE COUTEAUX TOPCUT | MESSERBETAETIGUNG TOPCUT | |
| 11 | F01020562 | VITE M16X2X30 U5739 8.8ZN | SCR. M16X2X30 U5739 8.8ZN | VIS M16X2X30 U5739 8.8 ZN | SCHRAUBE M16X2X30 U5739 8.8 ZN | TORNILLO M16X2X30 U5739 8.8 ZN |
| 12 | B01300706 | BUSSOLA DI GUIDA | GUIDE BUSH | DOUILLE DE GUIDE | FUHRUNGSBUCHSE | |
| 13 | B07SP0024 | BILANCINO TOPCUT | TOPCUT ROCKER ARM | PALONNIER TOPCUT | SCHWINGE TOPCUT | |
| 14 | B07S01125 | SOSTEGNO MOLLE | SPRING BRAKET | SUPPORT RESSORTS | FEDERHALTERUNG | |
| 15 | B03800014 | ROTELLA GUIDA COLTELLI | KNIVES GUIDE PULLEY | GALET GUIDE COUTEAUX | MESSER FUHRUNGSROLLE | |
| 16 | B01300694 | PERNO CARRUCOLA COLTELLO | KNIFE ROLLER PIN | TOURILLON POULIE COUTEAU | MESSERFUHRUNGSROLLENBOLZEN | |
| 17 | B01700016 | ANEL. D ARR. ALB. 16-E UNI3653 | SEEGER RING | BAGUE SEEGER | SEEGERING | |
| 18 | B01800049 | MOLLA TRAVERSA COLTELLI | SPRING KNIV.CONTROL 5 30 293C | RESSORT | FEDER | |
| 19 | B03500034 | PERNO FULCRO | PIVOT | TOURILLON | DREHZAPFEN | |
| 20 | B01300036 | RALLA 25,5X40 X 4 | FIFTH WHEEL | BUTEE | LAGERSCHALE 25,5X40X4 | |
| 21 | B07S01145 | FULCRO SX LEVERISMI | LEFT LINKAGE FULCRUM | POINT D APPUI GAUCHE LEVIERS | LINKER HEBELWERKSCHWENKPUNKT | |
| 22 | F01020510 | VITE M12X1,75X30 U5739 8.8ZN | SCR. M12X1,75X30 U5739 8.8ZN | VIS M12X1,75X30 U5739 8.8ZN | SCHRAU.M12X1,75X30 U5739 8.8ZN | TORN. M12X1,75X30 U5739 8.8ZN |
| 23 | B00920412 | DADO M12X1,75 D985 8 ZN | NUT | ECROU | SELBSTSICHERNDE MUTTER M12-5S | |
| 24 | B01110635 | SPINA ELAST. 6X 35 SS DIN 1481 | PIN | GOUPILLE | STIFT | |
| 25 | B035P0016 | ASTA NEW | NEW ROD | TIGE NEW | STAB NEW | |
| 26 | B035P0015 | FULCRO COLT. NEW | NEW KNIVES FULCRUM | POINT D APPUI COUTEAUX NEW | FULCRUM MESSER NEW | |
| 27 | F02150064 | LINGUETTA 8X 7X 25 U6604A | PARALLEL KEY 8X 7X 25 U6604A | CLAVETTE 8X7X25 | FEDER 8X7X25 UNI 6604 | LLAVE 8X7X25 |
| 28 | B07U00035 | COLTELLO ULTRACUT | TOPCUT KNIFE | COUTEAU CUT | SPEZIAL TOPCUT KLINGE | |
| 30 | B01300036 | RALLA 25,5X40 X 4 | FIFTH WHEEL | BUTEE | LAGERSCHALE 25,5X40X4 | |
| 31 | B07S01144 | FULCRO DX LEVERISMI | RIGHT LINKAGE FULCRUM | POINT D APPUI DROIT LEVIERS | RECHTER HEBELWERKSCHWENKPUNKT | |
| 32 | F01020510 | VITE M12X1,75X30 U5739 8.8ZN | SCR. M12X1,75X30 U5739 8.8ZN | VIS M12X1,75X30 U5739 8.8ZN | SCHRAU.M12X1,75X30 U5739 8.8ZN | TORN. M12X1,75X30 U5739 8.8ZN |
| 33 | B00920412 | DADO M12X1,75 D985 8 ZN | NUT | ECROU | SELBSTSICHERNDE MUTTER M12-5S | |
| 34 | B0C004233 | SOSTEGNO PROSIMITI CUT | CUT SENSOR SUPPORT | SUPPORT SENSEUR CUT | CUT SENSORHALTERUNG | |
| 35 | F01020512 | VITE M12X1,75X35 U5739 8.8ZN | SCR. M12X1,75X35 U5739 8.8ZN | VIS M12X1,75X35 5739 8.8 ZN | SCHR. M12X1,75X35 5739 8.8 ZN | TORN. M12X1,75X35 5739 8.8 ZN |
| 36 | B00920412 | DADO M12X1,75 D985 8 ZN | NUT | ECROU | SELBSTSICHERNDE MUTTER M12-5S | |
| 37 | B0E000056 | SENSORE PROSSIMITA BALLA M12 | PROXIMITY SENSOR | CAPTEUR DE PROXIMITE | ABSTANDSMELDER | |
| 38 | B07S01159 | MANIGLIA DI SICUREZZA | SAFETY HANDLE | POULIE DE SURETE | SICHERUNGSHEBEL | |
| 39 | F01040130 | VITE M10X1,5X60 U5931 8.8ZN | SCR. M10X1,5X60 U5931 8.8ZN | | | |
| 40 | B01821993 | MOLLA | SPRING | RESSORT | FEDER | |
| 41 | B01300401 | BUSSOLA FILETTATA | PIN WITHOUT NET | DOUILLE FILETEE | NETZAUFNAHMEZANGENBOLZEN | |
| 42 | F01230202 | DADO M10X1,25 D985 8 ZN | SELF-LOCKING NUT | ECROU NYLSTOP | SELBSTSICHERNDE MUTTER M10-5S | |
| 43 | F02100142 | SPINA E.P. 8X 40 U6873 C70 BR | ELASTIC PIN 8X40 | GOUJON ELASTIQUE 8X40 | SPANNHUELSE 8X40 | ESPINA ELASTICA 8X40 |
| 44 | F02100090 | SPINA E.P. 5X 40 U6873 C70 BR | ELASTIC PIN 5X40 | GOUJON ELASTIQUE 5X40 | SPANNHUELSE 5X40 | ESPINA ELASTICA 5X40 |
| 45 | F02100142 | SPINA E.P. 8X 40 U6873 C70 BR | ELASTIC PIN 8X40 | GOUJON ELASTIQUE 8X40 | SPANNHUELSE 8X40 | ESPINA ELASTICA 8X40 |
| 46 | B027P0001 | SEMIBIELLA DI TRASMISSIONE | DRIVE HALF ROD | DEMI BIELLE DE TRANSMISSION | HALB-KOLBENSTANGE | |
| 47 | F01020162 | VITE M12X1,75X65 U5737 8.8ZN | SCR. M12X1,75X65 U5737 8.8ZN | VIS M12X1,75X65 U5737 8.8 ZN | SCHRA.M12X1,75X65 U5737 8.8 ZN | TORNILLO M12X1,75X65 U5737 8.8 |
| 48 | B00920412 | DADO M12X1,75 D985 8 ZN | NUT | ECROU | SELBSTSICHERNDE MUTTER M12-5S | |
| 49 | B025P0003 | BUSSOLA NYLON | NYLON BUSH | DOUILLE EN NYLON | BUCHSE | |
| 50 | B0C005006 | FINTO COLT. CUT | BLANK KNIFE CUT | FAUX COUTEAU CUT | BLINDMESSER CUT | |
| 51 | B07S01896 | PORTA COLT. NEW | NEW KNIVES HOLDER | PORTE-COUTEAUX NEW | | |
| 52 | F01020510 | VITE M12X1,75X30 U5739 8.8ZN | SCR. M12X1,75X30 U5739 8.8ZN | VIS M12X1,75X30 U5739 8.8ZN | SCHRAU.M12X1,75X30 U5739 8.8ZN | TORN. M12X1,75X30 U5739 8.8ZN |
| 53 | B00920412 | DADO M12X1,75 D985 8 ZN | NUT | ECROU | SELBSTSICHERNDE MUTTER M12-5S | |
| 54 | B01170484 | SPINA MOLLA 4 OCCH.SEMPL.ZINC. | PIN | GOUPILLE CLIPS | STIFT | |

# TAV_105

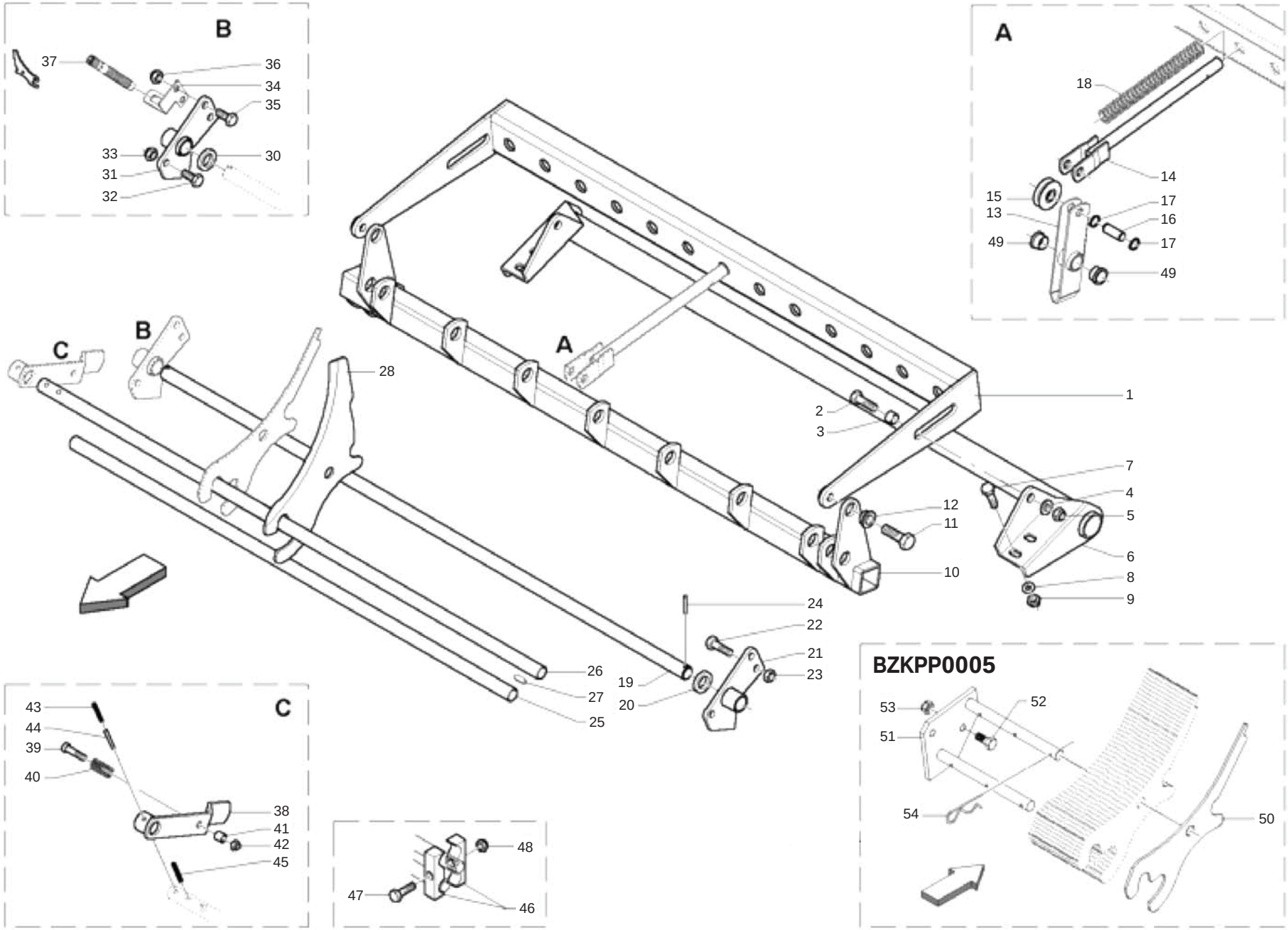
B
37
36
34
35
33
30
31
32
A
18
14
15
17
13
16
49
17
49
C
B
28
A
1
2
3
7
4
12
5
11
6
10
8
9
24
22
21
23
26
19
27
20
25
BZKPP0005
53
52
51
54
50
C
43
44
39
40
38
41
42
45
48
47
46

# CUT 25: TRAVERSA COLTELLI
## *CUT 25: KNIVES CROSSBAR*

TAV_105

| Pos. | Cod. | Descrizione | Description | Description | Benennung | Descripcion |
|---|---|---|---|---|---|---|
| 1 | B07S01802 | CONTRASTO MOLLE TOPCUT | KNIFE RESISTANCE TOPCUT | RESISTENCE DENTS TOPCUT | MESSERWIDERSTAND TOPCUT | |
| 2 | F01020568 | VITE M16X2X45 U5739 8.8ZN | SCR. M16X2X45 U5739 8.8ZN | VIS M 16X 2X45 U5739 8.8 ZG | SCHRAUBE M 16X 2X45 U5739 8.8 | TORNILLO M16X 2X45 U5739 8.8 |
| 3 | B01300745 | DISTANZIALE 16X20X14 | SPACER | ENTRETOISE | DISTANZSTUECK 16X20X14 | |
| 4 | F01410100 | ROS.M16 17X 30X 3 U6592 ZN | WASHER | RONDELLE | SCHEIBE | |
| 5 | B00920516 | DADO M16X 1,5 D985 6S ZN | NUT M16X1,5 D985 6S ZN | ECROU | SELBSTSICHERNDE MUTTER M16-5S | |
| 6 | B07S01636 | COLLEGAMENTO INFERIORE NEW | LOWER CONNECTION | CONNECTION INFERIEURE | UNTERE VERBINDUNG | |
| 7 | F01020508 | VITE M12X1,75X 25 U5739 8.8ZN | SCREW | VIS | SCHRAUBE | |
| 8 | F01410076 | ROS.M12 13X 20X2,0 U1749 ZN | WASHER | RONDELLE | SCHEIBE | |
| 9 | B00920412 | DADO M12X1,75 D985 8 ZN | NUT | ECROU | SELBSTSICHERNDE MUTTER M12-5S | |
| 10 | B07S01803 | COM. COLT. TOPCUT | KNIFE CONTROL TOPCUT | COMMANDE COUTEAUX TOPCUT | MESSERBETAETIGUNG TOPCUT | |
| 11 | F01020562 | VITE M16X2X30 U5739 8.8ZN | SCR. M16X2X30 U5739 8.8ZN | VIS M16X2X30 U5739 8.8 ZN | SCHRAUBE M16X2X30 U5739 8.8 ZN | TORNILLO M16X2X30 U5739 8.8 ZN |
| 12 | B01300706 | BUSSOLA DI GUIDA | GUIDE BUSH | DOUILLE DE GUIDE | FUHRUNGSBUCHSE | |
| 13 | B07SP0024 | BILANCINO TOPCUT | TOPCUT ROCKER ARM | PALONNIER TOPCUT | SCHWINGE TOPCUT | |
| 14 | B07S01125 | SOSTEGNO MOLLE | SPRING BRAKET | SUPPORT RESSORTS | FEDERHALTERUNG | |
| 15 | B03800014 | ROTELLA GUIDA COLTELLI | KNIVES GUIDE PULLEY | GALET GUIDE COUTEAUX | MESSER FUHRUNGSROLLE | |
| 16 | B01300694 | PERNO CARRUCOLA COLTELLO | KNIFE ROLLER PIN | TOURILLON POULIE COUTEAU | MESSERFUHRUNGSROLLENBOLZEN | |
| 17 | B01700016 | ANEL. D ARR. ALB. 16-E UNI3653 | SEEGER RING | BAGUE SEEGER | SEEGERING | |
| 18 | B01800049 | MOLLA TRAVERSA COLTELLI | SPRING KNIV.CONTROL 5 30 293C | RESSORT | FEDER | |
| 19 | B03500034 | PERNO FULCRO | PIVOT | TOURILLON | DREHZAPFEN | |
| 20 | B01300036 | RALLA 25,5X40 X 4 | FIFTH WHEEL | BUTEE | LAGERSCHALE 25,5X40X4 | |
| 21 | B07S01145 | FULCRO SX LEVERISMI | LEFT LINKAGE FULCRUM | POINT D APPUI GAUCHE LEVIERS | LINKER HEBELWERKSCHWENKPUNKT | |
| 22 | F01020510 | VITE M12X1,75X30 U5739 8.8ZN | SCR. M12X1,75X30 U5739 8.8ZN | VIS M12X1,75X30 U5739 8.8ZN | SCHRAU.M12X1,75X30 U5739 8.8ZN | TORN. M12X1,75X30 U5739 8.8ZN |
| 23 | B00920412 | DADO M12X1,75 D985 8 ZN | NUT | ECROU | SELBSTSICHERNDE MUTTER M12-5S | |
| 24 | B01110635 | SPINA ELAST. 6X 35 SS DIN 1481 | PIN | GOUPILLE | STIFT | |
| 25 | B035P0016 | ASTA NEW | NEW ROD | TIGE NEW | STAB NEW | |
| 26 | B035P0015 | FULCRO COLT. NEW | NEW KNIVES FULCRUM | POINT D APPUI COUTEAUX NEW | FULCRUM MESSER NEW | |
| 27 | F02150064 | LINGUETTA 8X 7X 25 U6604A | PARALLEL KEY 8X 7X 25 U6604A | CLAVETTE 8X7X25 | FEDER 8X7X25 UNI 6604 | LLAVE 8X7X25 |
| 28 | B07U00035 | COLTELLO ULTRACUT | TOPCUT KNIFE | COUTEAU CUT | SPEZIAL TOPCUT KLINGE | |
| 30 | B01300036 | RALLA 25,5X40 X 4 | FIFTH WHEEL | BUTEE | LAGERSCHALE 25,5X40X4 | |
| 31 | B07S01144 | FULCRO DX LEVERISMI | RIGHT LINKAGE FULCRUM | POINT D APPUI DROIT LEVIERS | RECHTER HEBELWERKSCHWENKPUNKT | |
| 32 | F01020510 | VITE M12X1,75X30 U5739 8.8ZN | SCR. M12X1,75X30 U5739 8.8ZN | VIS M12X1,75X30 U5739 8.8ZN | SCHRAU.M12X1,75X30 U5739 8.8ZN | TORN. M12X1,75X30 U5739 8.8ZN |
| 33 | B00920412 | DADO M12X1,75 D985 8 ZN | NUT | ECROU | SELBSTSICHERNDE MUTTER M12-5S | |
| 34 | B0C004233 | SOSTEGNO PROSIMITI CUT | CUT SENSOR SUPPORT | SUPPORT SENSEUR CUT | CUT SENSORHALTERUNG | |
| 35 | F01020512 | VITE M12X1,75X35 U5739 8.8ZN | SCR. M12X1,75X35 U5739 8.8ZN | VIS M12X1,75X35 5739 8.8 ZN | SCHR. M12X1,75X35 5739 8.8 ZN | TORN. M12X1,75X35 5739 8.8 ZN |
| 36 | B00920412 | DADO M12X1,75 D985 8 ZN | NUT | ECROU | SELBSTSICHERNDE MUTTER M12-5S | |
| 37 | B0E000056 | SENSORE PROSSIMITA BALLA M12 | PROXIMITY SENSOR | CAPTEUR DE PROXIMITE | ABSTANDSMELDER | |
| 38 | B07S01159 | MANIGLIA DI SICUREZZA | SAFETY HANDLE | POULIE DE SURETE | SICHERUNGSHEBEL | |
| 39 | F01040130 | VITE M10X1,5X60 U5931 8.8ZN | SCR. M10X1,5X60 U5931 8.8ZN | | | |
| 40 | B01821993 | MOLLA | SPRING | RESSORT | FEDER | |
| 41 | B01300401 | BUSSOLA FILETTATA | PIN WITHOUT NET | DOUILLE FILETEE | NETZAUFNAHMEZANGENBOLZEN | |
| 42 | F01230202 | DADO M10X1,25 D985 8 ZN | SELF-LOCKING NUT | ECROU NYLSTOP | SELBSTSICHERNDE MUTTER M10-5S | |
| 43 | F02100142 | SPINA E.P. 8X 40 U6873 C70 BR | ELASTIC PIN 8X40 | GOUJON ELASTIQUE 8X40 | SPANNHUELSE 8X40 | ESPINA ELASTICA 8X40 |
| 44 | F02100090 | SPINA E.P. 5X 40 U6873 C70 BR | ELASTIC PIN 5X40 | GOUJON ELASTIQUE 5X40 | SPANNHUELSE 5X40 | ESPINA ELASTICA 5X40 |
| 45 | F02100142 | SPINA E.P. 8X 40 U6873 C70 BR | ELASTIC PIN 8X40 | GOUJON ELASTIQUE 8X40 | SPANNHUELSE 8X40 | ESPINA ELASTICA 8X40 |
| 46 | B027P0001 | SEMIBIELLA DI TRASMISSIONE | DRIVE HALF ROD | DEMI BIELLE DE TRANSMISSION | HALB-KOLBENSTANGE | |
| 47 | F01020162 | VITE M12X1,75X65 U5737 8.8ZN | SCR. M12X1,75X65 U5737 8.8ZN | VIS M12X1,75X65 U5737 8.8 ZN | SCHRA.M12X1,75X65 U5737 8.8 ZN | TORNILLO M12X1,75X65 U5737 8.8 |
| 48 | B00920412 | DADO M12X1,75 D985 8 ZN | NUT | ECROU | SELBSTSICHERNDE MUTTER M12-5S | |
| 49 | B025P0003 | BUSSOLA NYLON | NYLON BUSH | DOUILLE EN NYLON | BUCHSE | |
| 50 | B0C005006 | FINTO COLT. CUT | BLANK KNIFE CUT | FAUX COUTEAU CUT | BLINDMESSER CUT | |
| 51 | B07S01896 | PORTA COLT. NEW | NEW KNIVES HOLDER | PORTE-COUTEAUX NEW | | |
| 52 | F01020510 | VITE M12X1,75X30 U5739 8.8ZN | SCR. M12X1,75X30 U5739 8.8ZN | VIS M12X1,75X30 U5739 8.8ZN | SCHRAU.M12X1,75X30 U5739 8.8ZN | TORN. M12X1,75X30 U5739 8.8ZN |
| 53 | B00920412 | DADO M12X1,75 D985 8 ZN | NUT | ECROU | SELBSTSICHERNDE MUTTER M12-5S | |
| 54 | B01170484 | SPINA MOLLA 4 OCCH.SEMPL.ZINC. | PIN | GOUPILLE CLIPS | STIFT | |

# TAV_110

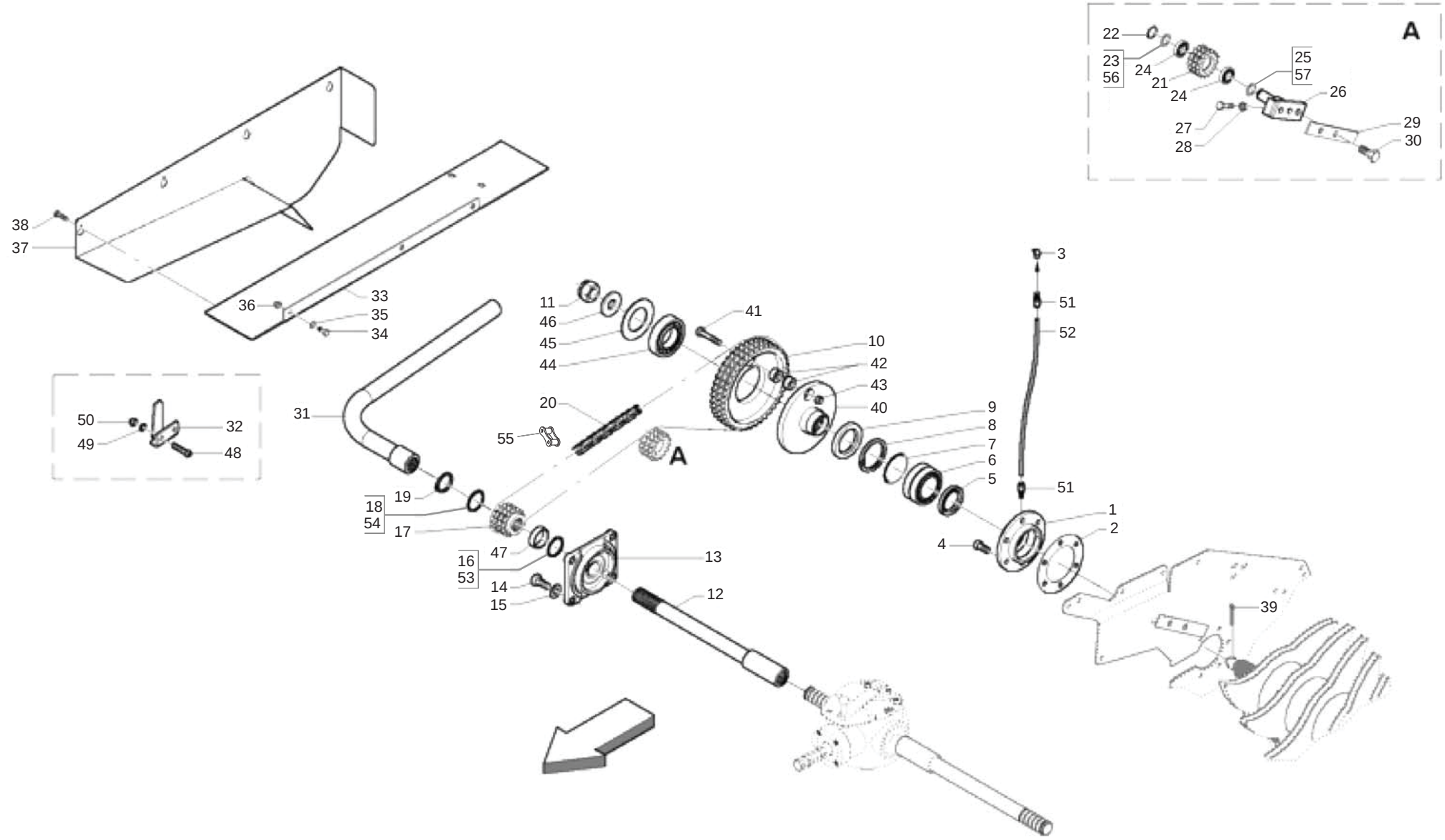




MASCHIO

cod. F07022223

# SICUREZZA TRASMISSIONE: MECCANICA CON BULLONE
## *TRASMISSION SAFETY DEVICE: MECHANICAL WITH BOLT*

TAV_110

| Pos. | Cod. | Descrizione | Description | Description | Benennung | Descripcion |
|---|---|---|---|---|---|---|
| 1 | B02700052 | SUPP. COM. ROT. | CONTROL ROTOR SUPPORT | SUPPORT CONTROLE ROTOR | LAGER DES ROTORSANTRIEBS | |
| 2 | B01300960 | SPESSORE SUPPORTO ROTORE | ROTOR SUPPORT SPACING | ENTRETOISE SUPPORT ROTOR | DISTANZSTUCK FUR ROTORLAGER | |
| 3 | B04200610 | INGRASS.A SFERE M6X1 LUNGO | GREASE NIPPLE | GRAISSEUR HYDRAULIQUE | GERADER SCHMIERNIPPEL M6X1 | |
| 4 | F01040140 | VITE M12X1,75X 40 U5931 8.8ZN | SCREW M12X1,75X 40 U5931 8.8Z | | | |
| 5 | B04304966 | ANELLO TENUTA 55X 85X10 NORM | SEAL | BAGUE | DICHTUNG 55X85X10 | |
| 6 | B02335023 | CUSC. 22210 CAT.B-ST004 | BEARING | ROULEMENT | LAGER 22210 | |
| 7 | B01534318 | SPES. 80 90 0,2 | SHIM | ENTRETOISE | DISTANZSTUECK 80 90 0,2 | |
| 8 | B01710090 | ANEL. D ARR. FORO 90-I UNI3654 | SEEGER RING | BAGUE SEEGER | SEEGERRING 90-I | |
| 9 | B04305668 | ANELLO TENUTA 65X 90X10 NORM | SEAL | BAGUE | DICHTUNG 65X90X10 | |
| 10 | B03400070 | INGR. TRIP Z42 - 3 4 X 7 16 | TRIPLE GEAR Z=42-3 4 X7 16 | ENGRENAGE TRIPLE | DREIFACH ZAHNRAD Z=42 -3 4 X | |
| 11 | B00851530 | DADO M30X 2 U5588 6S ZN | NUT | ECROU | KRONENMUTTER M30X2-6S | |
| 12 | B0R000304 | ALBERO PROLUNGA L=602 | EXTENSION SHAFT L=602 | ARBRE RALLONGE L=602 | VERLAENGERUNGSWELLE L=602 | |
| 13 | B02700051 | SUPPORTO FLANGIATO | FLANGED SUPPORT | SUPPORT EMBOUTI | FLANSCHLAGER | |
| 14 | F01020512 | VITE M12X1,75X35 U5739 8.8ZN | SCR. M12X1,75X35 U5739 8.8ZN | VIS M12X1,75X35 5739 8.8 ZN | SCHR. M12X1,75X35 5739 8.8 ZN | TORN. M12X1,75X35 5739 8.8 ZN |
| 15 | F01410076 | ROS.M12 13X 20X2,0 U1749 ZN | WASHER | RONDELLE | SCHEIBE | |
| 16 | B01300151 | SPES. 40 48 2 ZINCATO | SHIM | ENTRETOISE | DISTANZSTUECK 40 48 2 | |
| 17 | B03400072 | INGR.TRIPLO Z=13-3 4 X7 16 | TRIPLE GEAR Z=13-3 4 X7 16 | ENGRENAGE TRIPLE | DREIFACH ZAHNRAD Z=13-3 4 X7 1 | |
| 18 | B01300151 | SPES. 40 48 2 ZINCATO | SHIM | ENTRETOISE | DISTANZSTUECK 40 48 2 | |
| 19 | B01700040 | ANEL. D ARR. ALBERO 40-E UNI 3 | SEEGER RING | BAGUE SEEGER | SEEGERRING 40-E | |
| 20 | B030F1117 | CATENA RULLI ISO 12 B - 3 117M | ROLLER CHAIN ISO12 B-3 117M | CHAINE ROULEAUX | WALZENKETTE ISO 12 B | |
| 21 | B03400073 | INGR.TRIPLO Z=13-3 4 X7 16 | TRIPLE GEAR Z=13-3 4 X7 16 | ENGRENAGE TRIPLE | DREIFACH-ZAHNRAD Z=13-3 4 X7 | |
| 22 | F02050101 | ANEL. D ARR. ALB. 25-E UNI3653 | SEEGER RING | BAGUE SEEGER | SEEGERRING 25-E | |
| 23 | B01300105 | SPES. 25,5 37 0,5 | SHIM | ENTRETOISE | DISTANZSTUECK 25,5 37 0,5 | |
| 24 | B02042512 | CUSC 6005-2RS CAT.B-ST004 | BEARING | ROULEMENT | LAGER | |
| 25 | B01300106 | SPES. 25,5 37 1 ZINCATO | SHIM GALV | ENTRETOISE GALV | DISTANZSTUECK 25,5 37 1 | |
| 26 | B07S00848 | PERNO TENDITORE | TENSIONER PIN | TOURILLON TENDEUR | SPANNBOLZEN | |
| 27 | F01020522 | VITE M12X1,75X80 U5739 8.8ZN | SCR. M12X1,75X80 U5739 8.8ZN | VIS M12X1,75X80 U5739 8.8ZN | SCHRA.M12X1,75X80 U5739 8.8ZN | TORN.M12X1,75X80 U5739 8.8ZN |
| 28 | F01200293 | DADO M12X1,75 U5588 CL8 ZN | NUT M12X1,75 U5588 6S ZN | ECROU M12X1,75 U5588 6S ZN | MUTTER M12X1,75 U5588 6S ZN | TUERCA M12X1,75 U5588 6S ZN |
| 29 | B0C002732 | RINFORZO | REINFORCEMENT | RENFORT | VERSTAERKUNG | |
| 30 | F01020564 | VITE M16X2X35 U5739 8.8ZN | SCR. M16X2X35 U5739 8.8ZN | VIS M 16X35 | SCHRAUBE M 16X35 | TORNILLO M 16X35 |
| 31 | B07S01804 | MANIGLIA SGOLFAMENTO CUT | HANDLE | POIGNEE DEBOURRAGE CUT | KURBEL | |
| 32 | B0C005030 | SOSTEGNO MANIGLIA | HANDLE SUPPORT | SUPPORT POIGN E | GRIFFHALTERUNG | |
| 33 | B0C002663 | ATTACCO CARTER CUT | COVER PLATE ATTACHMENT | ATTELAGE CARTER CUT | ABECKBLECHHALTERUNG | |
| 34 | F01020508 | VITE M12X1,75X 25 U5739 8.8ZN | SCREW | VIS | SCHRAUBE | |
| 35 | F01410076 | ROS.M12 13X 20X2,0 U1749 ZN | WASHER | RONDELLE | SCHEIBE | |
| 36 | B00920412 | DADO M12X1,75 D985 8 ZN | NUT | ECROU | SELBSTSICHERNDE MUTTER M12-5S | |
| 37 | B07S01212 | CARTER TRASMISSIONE ROT. | ROTOR TRANSMISSION COVER | CARTER TRANSMISSION ROTOR | ROTORANTRIEBABDECKBLECH | |
| 38 | F01020432 | VITE M8X1,25X16 U5739 8.8ZN | SCR. M8X1,25X16 U5739 8.8ZN | VIS M8 X1,25X16 U5739 8.8 ZN | SCHRAUBE M8X1,25X16U5739 8.8ZN | TORNILLO M8X1,25X16U5739 8.8ZN |
| 39 | B01150560 | COPIGLIA 5X 70 U1336 ZN | GALV PIN | GOUPILLE GALV | SPLINT | |
| 40 | B02700079 | SICUREZZA ROT. | ROTOR SAFETY | SURETE ROTEUR | SCHERBOLZEN | |
| 41 | F01020203 | VITE M14X2X60 U5737 8.8ZN | SCR. M14X2X60 U5737 8.8ZN | VIS M 14X60 | SCHRAUBE M 14X60 | TORNILLO M 14X60 |
| 42 | B01300702 | BUSSOLA D=35 D=14.5 L=18.5 | BUSH D=35 D=14.5 L=18.5 | DOUILLE | BUCHSE | |
| 43 | B00920514 | DADO M14X 2 D985 8 ZN | NUT | ECROU | SELBSTSICHERNDE MUTTER M14-5S | |
| 44 | B02047020 | CUSC. 6014-2RS CAT.B-ST004 | BEARING | ROULEMENT | LAGER 6014-2RS | |
| 45 | B01300824 | FLANGIA | FLANGE | FLASQUE | FLANSCH | |
| 46 | B01300823 | RALLA 30,5X92X8 | FITH WHEEL | BUTEE | SCHEIBE 30,5X92X8 | |
| 47 | B01300355 | DISTANZIALE 40X54X20 | SPACER | ENTRETOISE | ABSTANDSTUECK 40X54X20 | |
| 48 | B00471280 | VITE TTEI M12X 80-10.9 UNBRAKO | SCREW | VIS | SCHRAUBE TTEI M12X 80-8.8 | |
| 49 | F01410076 | ROS.M12 13X 20X2,0 U1749 ZN | WASHER | RONDELLE | SCHEIBE | |
| 50 | B00920412 | DADO M12X1,75 D985 8 ZN | NUT | ECROU | SELBSTSICHERNDE MUTTER M12-5S | |
| 51 | B0H000259 | RACCORDO M6X1 COMPLETO | FITTING OUT M6X1 | RACCORD | KUPPLUNG M6X1 | |
| 52 | B0H0P0029 | TUBETTO NYLON 4 L 180 | NYLON HOSE | TUYAU EN NYLON | KLEINS ROHR AUS NYLON | |
| 53 | B01300150 | SPES. 40 48 1,5 ZINCATO | SHIM GALV | ENTRETOISE GALV | DISTANZSTUECK 40 48 1,5 | |
| 54 | B01300150 | SPES. 40 48 1,5 ZINCATO | SHIM GALV | ENTRETOISE GALV | DISTANZSTUECK 40 48 1,5 | |
| 55 | B030F0017 | GIUNTO MOLL.N. 26 ISO 12 B - 3 | SPRING JOINT N.26 ISO 12 B-3 | JOINT RESSORT | KUPPLUNGSSTUCK N. 26 ISO | |
| 56 | B01300106 | SPES. 25,5 37 1 ZINCATO | SHIM GALV | ENTRETOISE GALV | DISTANZSTUECK 25,5 37 1 | |
| 57 | B01300105 | SPES. 25,5 37 0,5 | SHIM | ENTRETOISE | DISTANZSTUECK 25,5 37 0,5 | |

# TAV_115

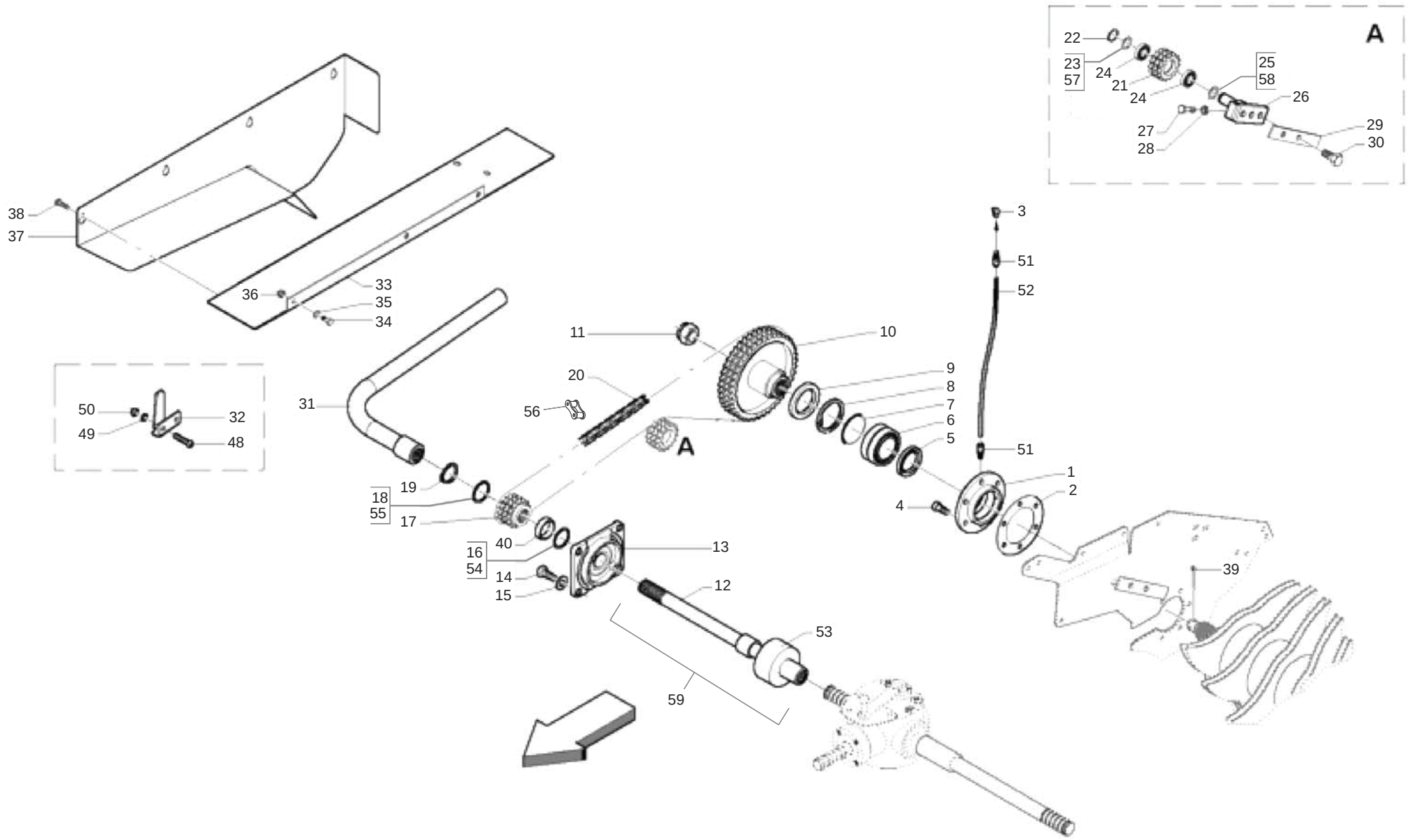




MASCHIO

cod. F07022223

## SICUREZZA TRASMISSIONE: AUTOMATICA "AFC"
## *TRANSMISSIONE SAFETY DEVICE: AUTOMATIC "AFC"*

TAV_115

| Pos. | Cod. | Descrizione | Description | Description | Benennung | Descripcion |
|---|---|---|---|---|---|---|
| 1 | B02700052 | SUPP. COM. ROT. | CONTROL ROTOR SUPPORT | SUPPORT CONTROLE ROTOR | LAGER DES ROTORSANTRIEBS | |
| 2 | B01300960 | SPESSORE SUPPORTO ROTORE | ROTOR SUPPORT SPACING | ENTRETOISE SUPPORT ROTOR | DISTANZSTUCK FUR ROTORLAGER | |
| 3 | B04200610 | INGRASS.A SFERE M6X1 LUNGO | GREASE NIPPLE | GRAISSEUR HYDRAULIQUE | GERADER SCHMIERNIPPEL M6X1 | |
| 4 | F01040140 | VITE M12X1,75X 40 U5931 8.8ZN | SCREW M12X1,75X 40 U5931 8.8Z | | | |
| 5 | B04304966 | ANELLO TENUTA 55X 85X10 NORM | SEAL | BAGUE | DICHTUNG 55X85X10 | |
| 6 | B02335023 | CUSC. 22210 CAT.B-ST004 | BEARING | ROULEMENT | LAGER 22210 | |
| 7 | B01534318 | SPES. 80 90 0,2 | SHIM | ENTRETOISE | DISTANZSTUECK 80 90 0,2 | |
| 8 | B01710090 | ANEL. D ARR. FORO 90-I UNI3654 | SEEGER RING | BAGUE SEEGER | SEEGERRING 90-I | |
| 9 | B04305668 | ANELLO TENUTA 65X 90X10 NORM | SEAL | BAGUE | DICHTUNG 65X90X10 | |
| 10 | B07S01609 | INGRANAGGIO ROT. | ROTOR SPROCKET | ENGRANAGE ROTOR | ROTOR ZAHNRAD | |
| 11 | B00851530 | DADO M30X 2 U5588 6S ZN | NUT | ECROU | KRONENMUTTER M30X2-6S | |
| 12 | B03600127 | ALBERO PROLUNGA L=399 | EXTENSION SHAFT L=395 | ARBRE L=395 | VERLAENGERUNGSWELLE L=399 | |
| 13 | B02700051 | SUPPORTO FLANGIATO | FLANGED SUPPORT | SUPPORT EMBOUTI | FLANSCHLAGER | |
| 14 | F01020512 | VITE M12X1,75X35 U5739 8.8ZN | SCR. M12X1,75X35 U5739 8.8ZN | VIS M12X1,75X35 5739 8.8 ZN | SCHR. M12X1,75X35 5739 8.8 ZN | TORN. M12X1,75X35 5739 8.8 ZN |
| 15 | F01410076 | ROS.M12 13X 20X2,0 U1749 ZN | WASHER | RONDELLE | SCHEIBE | |
| 16 | B01300151 | SPES. 40 48 2 ZINCATO | SHIM | ENTRETOISE | DISTANZSTUECK 40 48 2 | |
| 17 | B03400072 | INGR.TRIPLO Z=13-3 4 X7 16 | TRIPLE GEAR Z=13-3 4 X7 16 | ENGRENAGE TRIPLE | DREIFACH ZAHNRAD Z=13-3 4 X7 1 | |
| 18 | B01300150 | SPES. 40 48 1,5 ZINCATO | SHIM GALV | ENTRETOISE GALV | DISTANZSTUECK 40 48 1,5 | |
| 19 | B01700040 | ANEL. D ARR. ALBERO 40-E UNI 3 | SEEGER RING | BAGUE SEEGER | SEEGERRING 40-E | |
| 20 | B030F1117 | CATENA RULLI ISO 12 B - 3 117M | ROLLER CHAIN ISO12 B-3 117M | CHAINE ROULEAUX | WALZENKETTE ISO 12 B | |
| 21 | B03400073 | INGR.TRIPLO Z=13-3 4 X7 16 | TRIPLE GEAR Z=13-3 4 X7 16 | ENGRENAGE TRIPLE | DREIFACH-ZAHNRAD Z=13-3 4 X7 | |
| 22 | F02050101 | ANEL. D ARR. ALB. 25-E UNI3653 | SEEGER RING | BAGUE SEEGER | SEEGERRING 25-E | |
| 23 | B01300105 | SPES. 25,5 37 0,5 | SHIM | ENTRETOISE | DISTANZSTUECK 25,5 37 0,5 | |
| 24 | B02042512 | CUSC 6005-2RS CAT.B-ST004 | BEARING | ROULEMENT | LAGER | |
| 25 | B01300106 | SPES. 25,5 37 1 ZINCATO | SHIM GALV | ENTRETOISE GALV | DISTANZSTUECK 25,5 37 1 | |
| 26 | B07S00848 | PERNO TENDITORE | TENSIONER PIN | TOURILLON TENDEUR | SPANNBOLZEN | |
| 27 | F01020522 | VITE M12X1,75X80 U5739 8.8ZN | SCR. M12X1,75X80 U5739 8.8ZN | VIS M12X1,75X80 U5739 8.8ZN | SCHRA.M12X1,75X80 U5739 8.8ZN | TORN.M12X1,75X80 U5739 8.8ZN |
| 28 | F01200293 | DADO M12X1,75 U5588 CL8 ZN | NUT M12X1,75 U5588 6S ZN | ECROU M12X1,75 U5588 6S ZN | MUTTER M12X1,75 U5588 6S ZN | TUERCA M12X1,75 U5588 6S ZN |
| 29 | B0C002732 | RINFORZO | REINFORCEMENT | RENFORT | VERSTAERKUNG | |
| 30 | F01020564 | VITE M16X2X35 U5739 8.8ZN | SCR. M16X2X35 U5739 8.8ZN | VIS M 16X35 | SCHRAUBE M 16X35 | TORNILLO M 16X35 |
| 31 | B07S01804 | MANIGLIA SGOLFAMENTO CUT | HANDLE | POIGNEE DEBOURRAGE CUT | KURBEL | |
| 32 | B0C005030 | SOSTEGNO MANIGLIA | HANDLE SUPPORT | SUPPORT POIGN E | GRIFFHALTERUNG | |
| 33 | B0C002663 | ATTACCO CARTER CUT | COVER PLATE ATTACHMENT | ATTELAGE CARTER CUT | ABECKBLECHHALTERUNG | |
| 34 | F01020508 | VITE M12X1,75X 25 U5739 8.8ZN | SCREW | VIS | SCHRAUBE | |
| 35 | F01410076 | ROS.M12 13X 20X2,0 U1749 ZN | WASHER | RONDELLE | SCHEIBE | |
| 36 | B00920412 | DADO M12X1,75 D985 8 ZN | NUT | ECROU | SELBSTSICHERNDE MUTTER M12-5S | |
| 37 | B07S01212 | CARTER TRASMISSIONE ROT. | ROTOR TRANSMISSION COVER | CARTER TRANSMISSION ROTOR | ROTORANTRIEBABDECKBLECH | |
| 38 | F01020432 | VITE M8X1,25X16 U5739 8.8ZN | SCR. M8X1,25X16 U5739 8.8ZN | VIS M8 X1,25X16 U5739 8.8 ZN | SCHRAUBE M8X1,25X16U5739 8.8ZN | TORNILLO M8X1,25X16U5739 8.8ZN |
| 39 | B01150560 | COPIGLIA 5X 70 U1336 ZN | GALV PIN | GOUPILLE GALV | SPLINT | |
| 40 | B01300355 | DISTANZIALE 40X54X20 | SPACER | ENTRETOISE | ABSTANDSTUECK 40X54X20 | |
| 48 | B00471280 | VITE TTEI M12X 80-10.9 UNBRAKO | SCREW | VIS | SCHRAUBE TTEI M12X 80-8.8 | |
| 49 | F01410076 | ROS.M12 13X 20X2,0 U1749 ZN | WASHER | RONDELLE | SCHEIBE | |
| 50 | B00920412 | DADO M12X1,75 D985 8 ZN | NUT | ECROU | SELBSTSICHERNDE MUTTER M12-5S | |
| 51 | B0H000259 | RACCORDO M6X1 COMPLETO | FITTING OUT M6X1 | RACCORD | KUPPLUNG M6X1 | |
| 52 | B0H0P0029 | TUBETTO NYLON 4 L 180 | NYLON HOSE | TUYAU EN NYLON | KLEINS ROHR AUS NYLON | |
| 53 | B03600128 | FRIZIONE PER GRUPPO AFC | COUPLING FRICTION FOR AFC | FRICTION | KUPPLUNG FUER AFC | |
| 54 | B01300150 | SPES. 40 48 1,5 ZINCATO | SHIM GALV | ENTRETOISE GALV | DISTANZSTUECK 40 48 1,5 | |
| 55 | B01300151 | SPES. 40 48 2 ZINCATO | SHIM | ENTRETOISE | DISTANZSTUECK 40 48 2 | |
| 56 | B030F0017 | GIUNTO MOLL.N. 26 ISO 12 B - 3 | SPRING JOINT N.26 ISO 12 B-3 | JOINT RESSORT | KUPPLUNGSSTUCK N. 26 ISO | |
| 57 | B01300106 | SPES. 25,5 37 1 ZINCATO | SHIM GALV | ENTRETOISE GALV | DISTANZSTUECK 25,5 37 1 | |
| 58 | B01300105 | SPES. 25,5 37 0,5 | SHIM | ENTRETOISE | DISTANZSTUECK 25,5 37 0,5 | |
| 59 | B03600094 | LIMITATORE CON PROLUNGA BYPY | TORQUE LIMITER WITH EXTENSION | LIMITEUR AVEC RALLONGE | UBERLASTKUPPLUNG MIT VERLANGER | |

# TAV_120

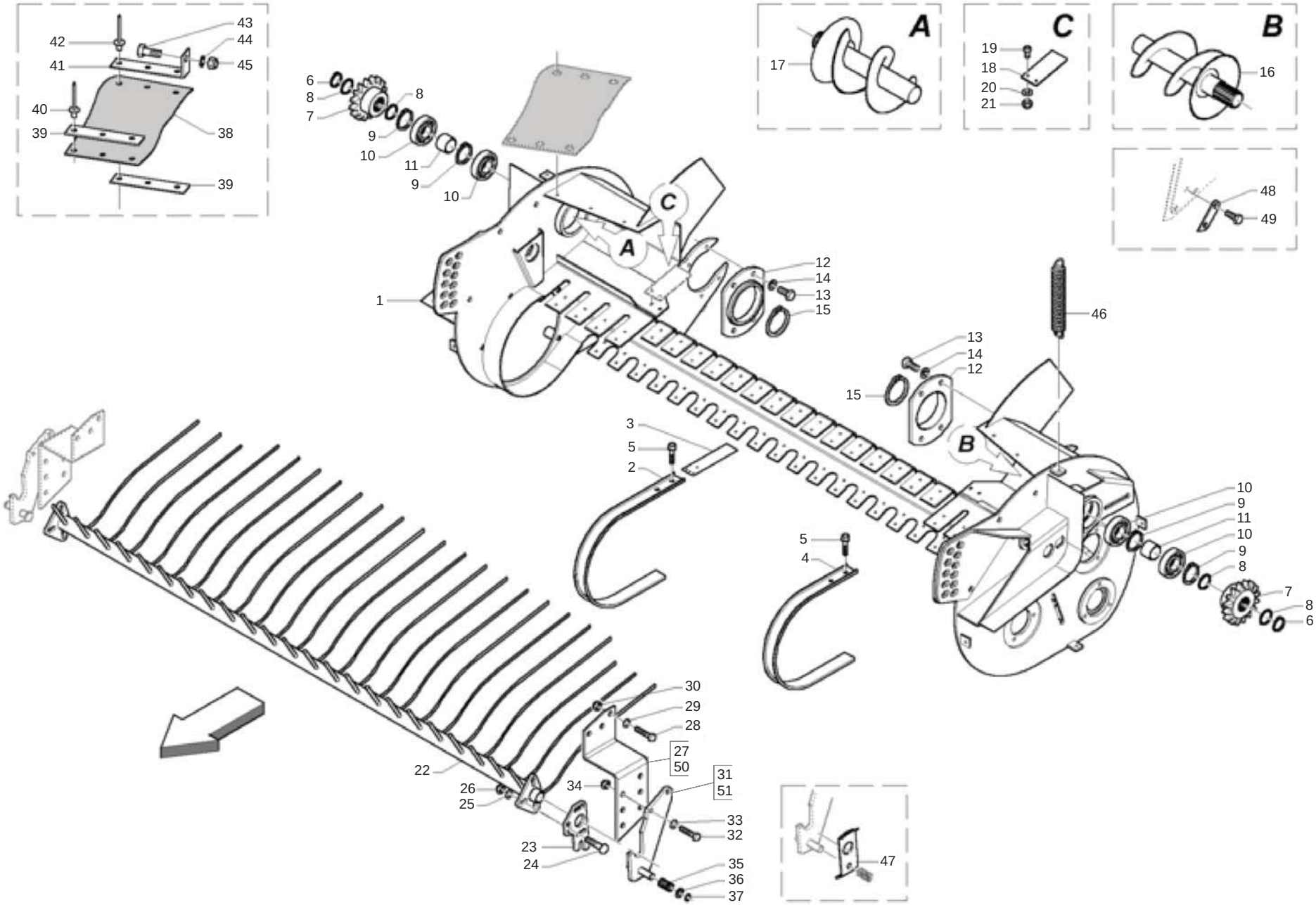




MASCHIO

cod. F07022223

# PICK-UP M
## *PICK-UP M*

TAV_120

| Pos. | Cod. | Descrizione | Description | Description | Benennung | Descripcion |
|---|---|---|---|---|---|---|
| 1 | B07S01642 | TELAIO PU M | PICK-UP FRAME M | CHASSIS PU M | PICK-UP RAHMEN M | |
| 2 | B0C003304 | FASCIA CENTRALE PICK UP TOPCUT | PICK-UP CENTRAL BAND TOPCUT | BANDE CENTRALE PICK-UP TOPCUT | ZENTRALES PICK-UP BAND | |
| 3 | B0C002069 | COMPENSO FASCIA | BAND EXTENSION | EPAISSEUR BANDE | BANDVERLAENGERUNG | |
| 4 | B0C003183 | FASCIA LATERALE PICK-UP | LATERAL BAND PICK-UP | BANDE LATERALE | SEITENBAND | |
| 5 | B00370615 | VITE M 6X16 ZN SEZ.TRIL. U8111 | SCREW | VIS | SCHRAUBE | |
| 6 | B01700035 | ANEL. D ARR. ALB. 35-E UNI3653 | SEEGER RING | BAGUE SEEGER | SEEGERRING 35-E | |
| 7 | B03400270 | INGR. Z=16-3 4 ISO CON MOZZO | GEAR Z=16 3 4 | ENGRANAGE | ZAHNRAD Z=16 3 4 | |
| 8 | B01534416 | SPES. 35 43 1 ZINCATO | SHIM | ENTRETOISE | AUSGLEICHSCHEIBE 35X43X1 | |
| 9 | F02050425 | ANEL. D ARR. FORO 80-I UNI3654 | SEEGER RING | BAGUE SEEGER | SEEGERRING 80-I | |
| 10 | B02040002 | CUSCINETTO 6307-2RS CAT.KST004 | BEARING | ROULEMENT | LAGER 6307-2RS | |
| 11 | B01300739 | DISTANZIALE 35X42X41 | SPACER | ENTRETOISE | DISTANZSTUECK 35X42X41 | |
| 12 | B01300715 | FLANGIA SX PICK-UP | PICK-UP FLANGE | FLASQUE GAUCHE POUR PICK-UP | PICK-UP FLANSCH | |
| 13 | B00181015 | VITE M10X1,5 X 16 U5739 8.8ZN | SCREW | VIS | SCHRAUBE | |
| 14 | F01410062 | ROS.M10 10,5X 18X 2 U6592 ZN | WASHER M10 10,5X 18X 2 U6592 | RONDELLE M10 10,5X18X2 ZN | DICHTUNGSRING M10 10,5X18X2 ZN | RONDANA M10 10,5X18X2 ZN |
| 15 | B01700095 | ANEL. D ARR. ALB. 95-E UNI3653 | SEEGER RING | BAGUE SEEGER | SEEGERRING 95-E | |
| 16 | B07S01652 | COCLEA SX PU 200 | LEFT PICK-UP AUGER 200 | VIS GAUCHE PU 200 | LINKE PICK-UP ZUBRINGERSCHNECK | |
| 17 | B07S01651 | COCLEA DX PU 200 | RIGHT PICK-UP AUGER 200 | VIS DROIT PU 200 | RECHTE PICK-UP ZUBRINGERSCHNEC | |
| 18 | B0C004894 | COMPENSO PER PU NORMALE | PICK-UP SHIM | EPAISSEUR POUR PU NORMAL | PICK-UP AUSGLEICHSTUECK | |
| 19 | B00470620 | VITE TTEI M 6X 20-8.8 UNBRA | SCREW | VIS | SCHRAUBE TTEI M6X20-10.9 | |
| 20 | F01410037 | ROS.M6 6,4X12,5X1,6 U6592 ZN | WASHER | RONDELLE | BEILAGSCHEIBE 6 | |
| 21 | B00920106 | DADO M6X1 D985 8ZN | NUT | ECROU | SELBSTSICHERNDE MUTTER M6-5S | |
| 22 | B07S01006 | RASTRELLO 200 | PICK-UP RAKE 200 | RATEAU | NIEDERHALTER 200 | |
| 23 | B0C003179 | AGGANCIO REGOLAZIONE | ADJUSTER ATTACHMENT | ACCROCHAGE REGLAGE | EINSTELLUNGSANKUPPLUNG | |
| 24 | B00523395 | VITE SPECIALE TTQST M12X45-8.8 | SPECIAL SCREW | VIS SPECIALE | SCHRAUBE TTQST M12X 45-8.8 | |
| 25 | B01522469 | RALLA 13 42 6 | FIFTH WHEEL | BUTEE | SCHEIBE | |
| 26 | B00920412 | DADO M12X1,75 D985 8 ZN | NUT | ECROU | SELBSTSICHERNDE MUTTER M12-5S | |
| 27 | B0C000057 | ATTACCO DX RASTRELLO | RIGHT RAKE ATTACHMENT | ATTELAGE DROITE GRILLE RABATTE | RECHTE NIEDERHALTERRECHENHALTE | |
| 28 | F01020516 | VITE M12X1,75X45 U5739 8.8ZN | SCR. M12X1,75X45 U5739 8.8ZN | VIS M12X1,75X45 U5739 8.8 ZN | SCHARAUBE M12X1,75X45 U5739 ZN | TORNIL.M12X1,75X45 U5739 8.8ZN |
| 29 | F01410076 | ROS.M12 13X 20X2,0 U1749 ZN | WASHER | RONDELLE | SCHEIBE | |
| 30 | B00920412 | DADO M12X1,75 D985 8 ZN | NUT | ECROU | SELBSTSICHERNDE MUTTER M12-5S | |
| 31 | B07S01005 | ATTACCO DX RASTRELLO | RIGHT RAKE ATTACHMENT | ATTELAGE DROIT RATEAU | RECHTER NIEDERHALTERANSCHUSS | |
| 32 | F01020512 | VITE M12X1,75X35 U5739 8.8ZN | SCR. M12X1,75X35 U5739 8.8ZN | VIS M12X1,75X35 5739 8.8 ZN | SCHR. M12X1,75X35 5739 8.8 ZN | TORN. M12X1,75X35 5739 8.8 ZN |
| 33 | F01410076 | ROS.M12 13X 20X2,0 U1749 ZN | WASHER | RONDELLE | SCHEIBE | |
| 34 | B00920412 | DADO M12X1,75 D985 8 ZN | NUT | ECROU | SELBSTSICHERNDE MUTTER M12-5S | |
| 35 | B01817605 | MOLLA C FILO 2,5 P24,5 L=60 | SPRING | RESSORT | C-FEDER | |
| 36 | F01410124 | ROS.M20 21X 37X 3 U6592 ZN | WASHER M20 21X 37X 3 U6592 ZN | RONDEL.M20 21X 37X 3 U6592 ZN | MUTTER M20 21X 37X 3 U6592 ZN | ARANDELA M20 21X37X3 U6592 ZN |
| 37 | B01700020 | ANEL. D ARR. ALB. 20-E UNI3653 | SEEGER RING | BAGUE SEEGER | SEEGERRING 20-E | |
| 38 | B07V00074 | PROT. COCLEA PU 180 | AUGER PROTECTION | PROTECTION PELLETEUSE PU 180 | SCHNECKENSCHUTZ | |
| 39 | B0C1P0583 | PIATTINO DI FISSAGGIO | FIXING PLATE | | | |
| 40 | B01000013 | RIVETTO STR. 5X18 U9200A AL | RIVET | RIVET | ABREISSNIETEN 6X18 | |
| 41 | B0C002409 | SOSTEGNO GOMMA PUL | RUBBER SUPPORT | SUPPORT PNEUS | GUMMIHALTER | |
| 42 | B01000012 | RIVETTO STR. 6,4X22 ACCIAIO | RIVET | RIVET | ABREISSNIETEN 6X26 | |
| 43 | F01020472 | VITE M10X1,5X25 U5739 8.8ZN | SCR. M10X1,5X25 U5739 8.8ZN | VIS M10X1,5X25 U5739 8.8 ZN | SCHRAUBE M10X1,5X25 U5739 8.8 | TORNILLO 10X25 U5739 8.8 ZN |
| 44 | F01410062 | ROS.M10 10,5X 18X 2 U6592 ZN | WASHER M10 10,5X 18X 2 U6592 | RONDELLE M10 10,5X18X2 ZN | DICHTUNGSRING M10 10,5X18X2 ZN | RONDANA M10 10,5X18X2 ZN |
| 45 | F01230202 | DADO M10X1,25 D985 8 ZN | SELF-LOCKING NUT | ECROU NYLSTOP | SELBSTSICHERNDE MUTTER M10-5S | |
| 46 | B01810412 | MOLLA | SPRING | RESSORT | FEDER | |
| 47 | B0C000058 | AGGANCIO RASTRELLO | RAKE LINKAGE | ATTELAGE GRILLE RABATTEUR | NIEDERHALTERRECHENANSCHLUSS | |
| 48 | B0C6P0039 | FERMO PICK-UP NORMALE | STANDARD PICK-UP LOCK | ARRET PICK-UP NORMAL | | |
| 49 | F01020512 | VITE M12X1,75X35 U5739 8.8ZN | SCR. M12X1,75X35 U5739 8.8ZN | VIS M12X1,75X35 5739 8.8 ZN | SCHR. M12X1,75X35 5739 8.8 ZN | TORN. M12X1,75X35 5739 8.8 ZN |
| 50 | B0C000056 | ATTACCO SX RASTRELLO | LEFT RAKE ATTACHMENT | ATTELAGE GAUCHE GRILLE RABATTE | LINKE NIEDERHALTERRECHENHALTER | |
| 51 | B07S01004 | ATTACCO SX RASTRELLO | LEFT RAKE ATTACHMENT | ATTELAGE GAUCHE RATEAU | LINKER NIEDERHALTERANSCHLUSS | |

# TAV_125

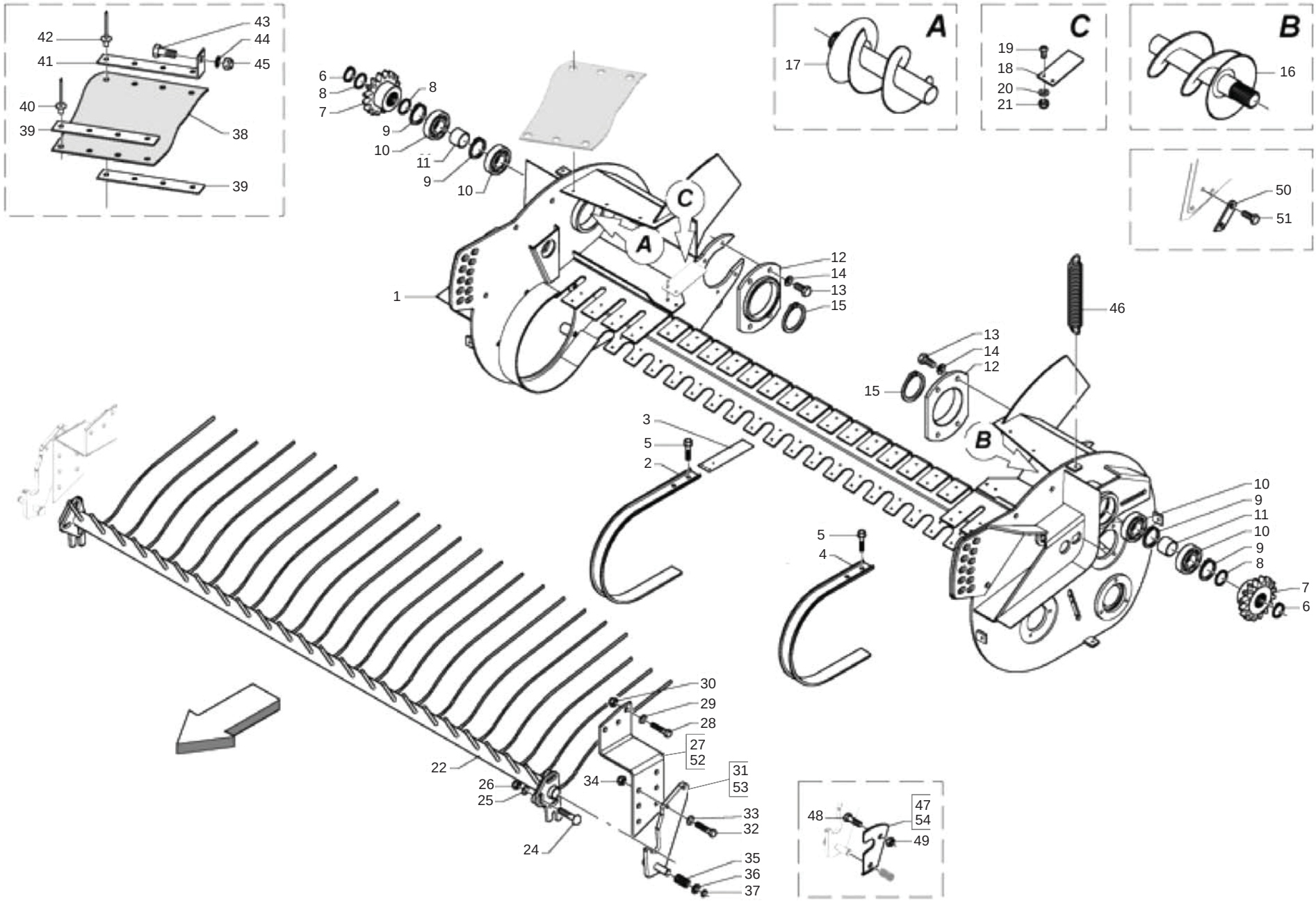




MASCHIO

cod. F07022223

# PICK-UP L
## *PICK-UP L*

TAV_125

| Pos. | Cod. | Descrizione | Description | Description | Benennung | Descripcion |
|---|---|---|---|---|---|---|
| 1 | B07S01649 | TELAIO PU L | PICK-UP FRAME L | CHASSIS PU L | PICK-UP RAHMEN L | |
| 2 | B0C003304 | FASCIA CENTRALE PICK UP TOPCUT | PICK-UP CENTRAL BAND TOPCUT | BANDE CENTRALE PICK-UP TOPCUT | ZENTRALES PICK-UP BAND | |
| 3 | B0C002069 | COMPENSO FASCIA | BAND EXTENSION | EPAISSEUR BANDE | BANDVERLAENGERUNG | |
| 4 | B0C003183 | FASCIA LATERALE PICK-UP | LATERAL BAND PICK-UP | BANDE LATERALE | SEITENBAND | |
| 5 | B00370615 | VITE M 6X16 ZN SEZ.TRIL. U8111 | SCREW | VIS | SCHRAUBE | |
| 6 | B01700035 | ANEL. D ARR. ALB. 35-E UNI3653 | SEEGER RING | BAGUE SEEGER | SEEGERRING 35-E | |
| 7 | B03400270 | INGR. Z=16-3 4 ISO CON MOZZO | GEAR Z=16 3 4 | ENGRANAGE | ZAHNRAD Z=16 3 4 | |
| 8 | B01534416 | SPES. 35 43 1 ZINCATO | SHIM | ENTRETOISE | AUSGLEICHSCHEIBE 35X43X1 | |
| 9 | F02050425 | ANEL. D ARR. FORO 80-I UNI3654 | SEEGER RING | BAGUE SEEGER | SEEGERRING 80-I | |
| 10 | B02040002 | CUSCINETTO 6307-2RS CAT.KST004 | BEARING | ROULEMENT | LAGER 6307-2RS | |
| 11 | B01300739 | DISTANZIALE 35X42X41 | SPACER | ENTRETOISE | DISTANZSTUECK 35X42X41 | |
| 12 | B01300715 | FLANGIA SX PICK-UP | PICK-UP FLANGE | FLASQUE GAUCHE POUR PICK-UP | PICK-UP FLANSCH | |
| 13 | B00181015 | VITE M10X1,5 X 16 U5739 8.8ZN | SCREW | VIS | SCHRAUBE | |
| 14 | F01410062 | ROS.M10 10,5X 18X 2 U6592 ZN | WASHER M10 10,5X 18X 2 U6592 | RONDELLE M10 10,5X18X2 ZN | DICHTUNGSRING M10 10,5X18X2 ZN | RONDANA M10 10,5X18X2 ZN |
| 15 | B01700095 | ANEL. D ARR. ALB. 95-E UNI3653 | SEEGER RING | BAGUE SEEGER | SEEGERRING 95-E | |
| 16 | B07S01654 | COCLEA SX PU 220 | LEFT PICK-UP AUGER 220 | VIS GAUCHE PU 220 | LINKE PICK-UP ZUBRINGERSCHNECK | |
| 17 | B07S01653 | COCLEA DX PU 220 | RIGHT PICK-UP AUGER 220 | VIS DROIT PU 220 | RECHTE PICK-UP ZUBRINGERSCHNEC | |
| 18 | B0C004894 | COMPENSO PER PU NORMALE | PICK-UP SHIM | EPAISSEUR POUR PU NORMAL | PICK-UP AUSGLEICHSTUECK | |
| 19 | B00470620 | VITE TTEI M 6X 20-8.8 UNBRA | SCREW | VIS | SCHRAUBE TTEI M6X20-10.9 | |
| 20 | F01410037 | ROS.M6 6,4X12,5X1,6 U6592 ZN | WASHER | RONDELLE | BEILAGSCHEIBE 6 | |
| 21 | B00920106 | DADO M6X1 D985 8ZN | NUT | ECROU | SELBSTSICHERNDE MUTTER M6-5S | |
| 22 | B07S01239 | RASTRELLO 220 | RAKE 220 | RATEAU 220 | NIEDERHALTERRECHEN 220 | |
| 24 | B00523395 | VITE SPECIALE TTQST M12X45-8.8 | SPECIAL SCREW | VIS SPECIALE | SCHRAUBE TTQST M12X 45-8.8 | |
| 25 | B01522469 | RALLA 13 42 6 | FIFTH WHEEL | BUTEE | SCHEIBE | |
| 26 | B00920412 | DADO M12X1,75 D985 8 ZN | NUT | ECROU | SELBSTSICHERNDE MUTTER M12-5S | |
| 27 | B0C000056 | ATTACCO SX RASTRELLO | LEFT RAKE ATTACHMENT | ATTELAGE GAUCHE GRILLE RABATTE | LINKE NIEDERHALTERRECHENHALTER | |
| 28 | F01020516 | VITE M12X1,75X45 U5739 8.8ZN | SCR. M12X1,75X45 U5739 8.8ZN | VIS M12X1,75X45 U5739 8.8 ZN | SCHARAUBE M12X1,75X45 U5739 ZN | TORNIL.M12X1,75X45 U5739 8.8ZN |
| 29 | F01410076 | ROS.M12 13X 20X2,0 U1749 ZN | WASHER | RONDELLE | SCHEIBE | |
| 30 | B00920412 | DADO M12X1,75 D985 8 ZN | NUT | ECROU | SELBSTSICHERNDE MUTTER M12-5S | |
| 31 | B07S01005 | ATTACCO DX RASTRELLO | RIGHT RAKE ATTACHMENT | ATTELAGE DROIT RATEAU | RECHTER NIEDERHALTERANSCHUSS | |
| 32 | F01020512 | VITE M12X1,75X35 U5739 8.8ZN | SCR. M12X1,75X35 U5739 8.8ZN | VIS M12X1,75X35 5739 8.8 ZN | SCHR. M12X1,75X35 5739 8.8 ZN | TORN. M12X1,75X35 5739 8.8 ZN |
| 33 | F01410076 | ROS.M12 13X 20X2,0 U1749 ZN | WASHER | RONDELLE | SCHEIBE | |
| 34 | B00920412 | DADO M12X1,75 D985 8 ZN | NUT | ECROU | SELBSTSICHERNDE MUTTER M12-5S | |
| 35 | B01817605 | MOLLA C FILO 2,5 P24,5 L=60 | SPRING | RESSORT | C-FEDER | |
| 36 | F01410124 | ROS.M20 21X 37X 3 U6592 ZN | WASHER M20 21X 37X 3 U6592 ZN | RONDEL.M20 21X 37X 3 U6592 ZN | MUTTER M20 21X 37X 3 U6592 ZN | ARANDELA M20 21X37X3 U6592 ZN |
| 37 | B01700020 | ANEL. D ARR. ALB. 20-E UNI3653 | SEEGER RING | BAGUE SEEGER | SEEGERRING 20-E | |
| 38 | B07V00081 | PROT. COCLEA PU 200 | AUGER GUARD | PROTECTION PELLETEUSE PU 200 | SCHNECKENSCHUTZ | |
| 39 | B0C003730 | FISSAGGIO GOMMA | FIXING PLATE | FIXAGE CAOUTCHOUC | GUMMIFIXIERPLATTE | |
| 40 | B01000013 | RIVETTO STR. 5X18 U9200A AL | RIVET | RIVET | ABREISSNIETEN 6X18 | |
| 41 | B0C003729 | SOSTEGNO GOMMA | RUBBER SUPPORT | SUPPORT CAOUTCHOUC | GUMMIHALTER | |
| 42 | B01000012 | RIVETTO STR. 6,4X22 ACCIAIO | RIVET | RIVET | ABREISSNIETEN 6X26 | |
| 43 | F01020472 | VITE M10X1,5X25 U5739 8.8ZN | SCR. M10X1,5X25 U5739 8.8ZN | VIS M10X1,5X25 U5739 8.8 ZN | SCHRAUBE M10X1,5X25 U5739 8.8 | TORNILLO 10X25 U5739 8.8 ZN |
| 44 | F01410062 | ROS.M10 10,5X 18X 2 U6592 ZN | WASHER M10 10,5X 18X 2 U6592 | RONDELLE M10 10,5X18X2 ZN | DICHTUNGSRING M10 10,5X18X2 ZN | RONDANA M10 10,5X18X2 ZN |
| 45 | F01230202 | DADO M10X1,25 D985 8 ZN | SELF-LOCKING NUT | ECROU NYLSTOP | SELBSTSICHERNDE MUTTER M10-5S | |
| 46 | B01810412 | MOLLA | SPRING | RESSORT | FEDER | |
| 47 | B0C003728 | AGGANCIO SX | LEFT RAKE LINKAGE | ACCROCHAGE GAUCHE | LINKER NIEDERHALTERRECHENANSCH | |
| 48 | F01020562 | VITE M16X2X30 U5739 8.8ZN | SCR. M16X2X30 U5739 8.8ZN | VIS M16X2X30 U5739 8.8 ZN | SCHRAUBE M16X2X30 U5739 8.8 ZN | TORNILLO M16X2X30 U5739 8.8 ZN |
| 49 | F01200444 | DADO M16X2 U5589 CL8 ZN 6SZN | NUT M16X2 U5589 6SZN | ECROU M16X2 | MUTTER M16X2 | DADO M16X2 |
| 50 | B0C6P0039 | FERMO PICK-UP NORMALE | STANDARD PICK-UP LOCK | ARRET PICK-UP NORMAL | | |
| 51 | F01020512 | VITE M12X1,75X35 U5739 8.8ZN | SCR. M12X1,75X35 U5739 8.8ZN | VIS M12X1,75X35 5739 8.8 ZN | SCHR. M12X1,75X35 5739 8.8 ZN | TORN. M12X1,75X35 5739 8.8 ZN |
| 52 | B0C000057 | ATTACCO DX RASTRELLO | RIGHT RAKE ATTACHMENT | ATTELAGE DROITE GRILLE RABATTE | RECHTE NIEDERHALTERRECHENHALTE | |
| 53 | B07S01004 | ATTACCO SX RASTRELLO | LEFT RAKE ATTACHMENT | ATTELAGE GAUCHE RATEAU | LINKER NIEDERHALTERANSCHLUSS | |
| 54 | B0C003727 | AGGANCIO DX | RIGHT RAKE LINKAGE | ACCROCHAGE DROIT | RECHTER NIEDERHALTERRECHENANSC | |

# TAV_130

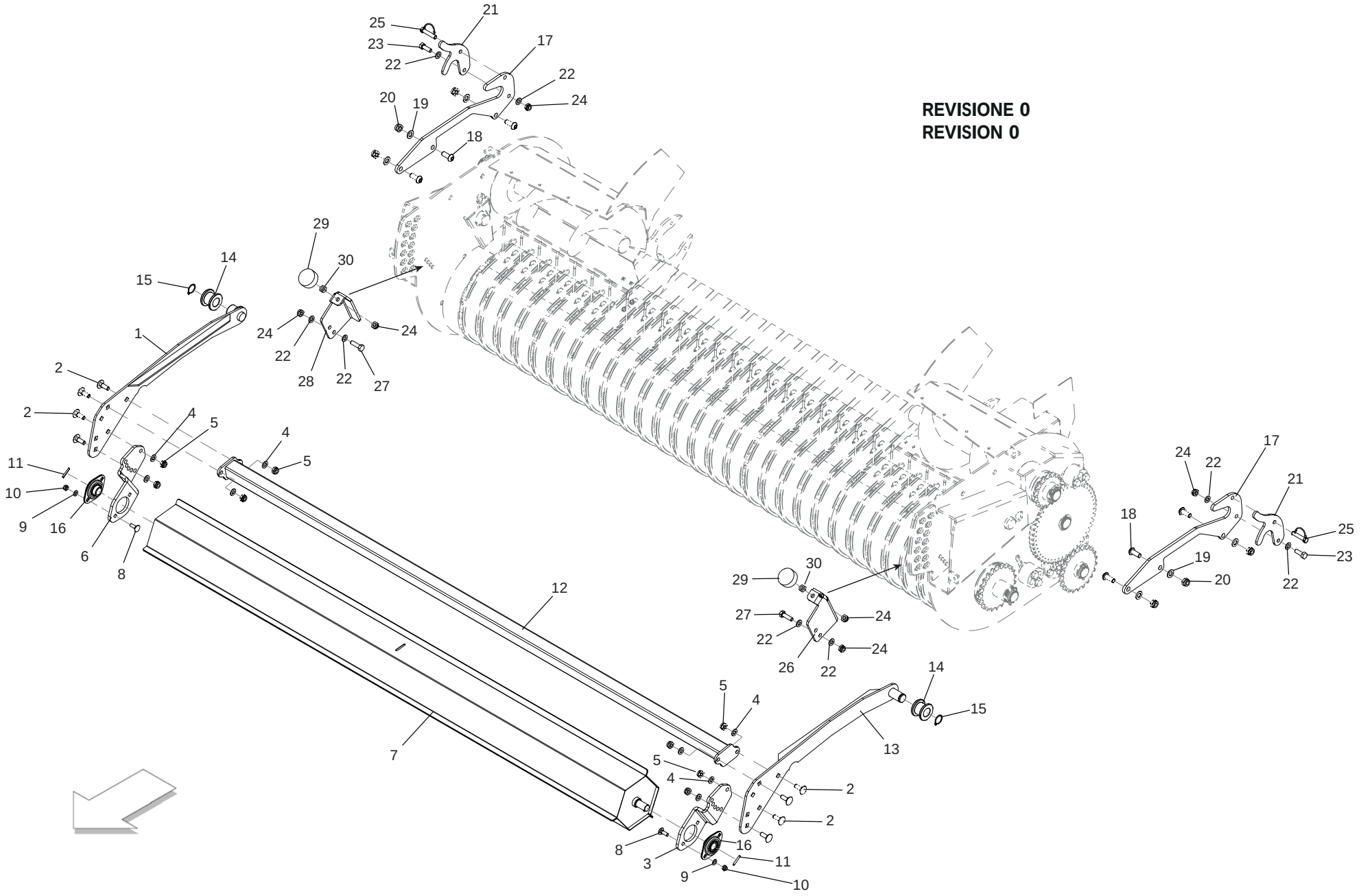




MASCHIO

cod. F07022223

# RULLO CONVOGLIATORE (PICK-UP L - PARTE 1) - REV 0
## *ROLLER CONVEYOR (PICK-UP L - PART 1) - REV 0*

TAV_130

| Pos. | Cod. | Descrizione | Description | Description | Benennung | Descripcion |
|---|---|---|---|---|---|---|
| 1 | B07SP0447 | FIANCO DX | RIGHT SIDE | | | |
| 2 | F01060069 | VITE M10X1,5X30 U5731 8.8ZN | SCR. M10X1,5X30 U5732 4.6ZN | BOULON 10X30 5732 4.6 | SCHRAUBE 10X30 5732 4.6 | PERNO 10X30 5732 4.6 |
| 3 | B0C4P0285 | ATTACCO SX | LEFT ATTACK | | | |
| 4 | F01410064 | ROS.M10 10,5X 18X 2 U6592 ZN | WASHER | RONDELLE | SCHEIBE | |
| 5 | F01230202 | DADO M10X1,25 D985 8 ZN | SELF-LOCKING NUT | ECROU NYLSTOP | SELBSTSICHERNDE MUTTER M10-5S | |
| 6 | B0C4P0286 | ATTACCO DX | RIGHT ATTACK | | | |
| 7 | B07SP0448 | RULLO CONVOGLIATORE L 200 | ROLLER CONVEYOR | | | |
| 8 | F01060202 | VITE M8X1,25X25 U5731 4.6ZN | SCR. M8X1,25X25 U5731 4.6ZN | VIS M8X1,25X25 U5731 4.6 | DUEBEL M8X1,25X25 U5731 4.6 ZN | TORNILLO M8X1,25X25 U5731 4.6 |
| 9 | F01410051 | ROS.M8 8,4X 17X1,6 U6592 ZN | WASHER M8 8,4X17X1,6 U6592 ZN | RONDELLE | SCHEIBE | |
| 10 | F01230190 | DADO M8X1 D985 8ZN | NUT M8X1 D985 8ZN | ECROU M8 | MUTTER M8DADO M8 | |
| 11 | F02100065 | SPINA E.P. 4X 30 U6873 C70 BR | PIN EL. 4X30 DIN 1481 | GOUPILLE EL.4 X30 DIN 1481 | SPANNSTIFT 4X30 DIN 1481 | CLAVIJA EL.4 X30 DIN 1481 |
| 12 | B07SP1004 | TUBO DI RINFORZO | REINFORCING TUBE | | | |
| 13 | B07SP0446 | FIANCO SX | LEFT SIDE | | | |
| 14 | B0C003712 | BOCCOLA | BUSH | COQUILLE | BUCHSE | |
| 15 | F02050101 | ANEL. D ARR. ALB. 25-E UNI3653 | SEEGER RING | BAGUE SEEGER | SEEGERRING 25-E | |
| 16 | B02341020 | SUPP.FLANG.OV 20 LAM NBR-NSK | SUPPORT | SUPPORT | GEFLANSCHTES LAGER | |
| 17 | B0C4P0466 | ATTACCO SOSTEGNO RULLO | ATTACK ROLLER SUPPORT | | | |
| 18 | B00471230 | VITE TTEI M12X 30-8.8 UNBRA | SCREW | VIS | SCHRAUBE TTEI M12X 30-8.8 | |
| 19 | F01410076 | ROS.M12 13X 20X2,0 U1749 ZN | WASHER | RONDELLE | SCHEIBE | |
| 20 | B00920412 | DADO M12X1,75 D985 8 ZN | NUT | ECROU | SELBSTSICHERNDE MUTTER M12-5S | |
| 21 | B0C6P0487 | GANCIO PER FIANCO SX-DX | HOOK LEFT RIGHT SIDE | | | |
| 22 | F01410064 | ROS.M10 10,5X 18X 2 U6592 ZN | WASHER | RONDELLE | SCHEIBE | |
| 23 | F01020476 | VITE M10X1,5X30 U5739 8.8ZN | SCR. M10X1,5X30 U5739 8.8ZN | VIS M10X1,5X30 U5739 8.8 ZN | SCHRAUBE M10X1,5X30U5739 8.8ZN | TORNIL.M10X1,5X30 U5739 8.8 ZN |
| 24 | F01230202 | DADO M10X1,25 D985 8 ZN | SELF-LOCKING NUT | ECROU NYLSTOP | SELBSTSICHERNDE MUTTER M10-5S | |
| 25 | B01000021 | SPINOTTO PER MOTOZAPPA 10X45 | PIN | EPINE | STIFT | |
| 26 | B0C6P0488 | ATTACCO TAMPONE SX | LEFT BUFFER CONNECTION | | | |
| 27 | F01020479 | VITE M10X1,5X35 U5739 8.8ZN | SCR. M10X1,5X35 U5739 8.8ZN | VIS M10X1,5X35 U5739 8.8 ZN | SCHR. M10X1,5X35 U5739 8.8 ZN | TORN. M10X1,5X35 U5739 8.8 ZN |
| 28 | B0C6P0489 | ATTACCO TAMPONE DX | RIGHT BUFFER CONNECTION | | | |
| 29 | B07049749 | TAMPONE 50X21 M10 | BUMPER 50X21 M10 | TAMPON 50X21 M10 | PUFFER 50X21 M10 | |
| 30 | F01200270 | DADO M10X1,5 U5588 CL8 ZN | NUT M10X1,5 U5588 6.8ZN | ECROU M10X 1,5 U5588 6.8 ZN | MUTTER M10X 1,5 U5588 6.8 ZN | TUERCA M10X 1,5 U5588 6.8 ZN |

TAV_131

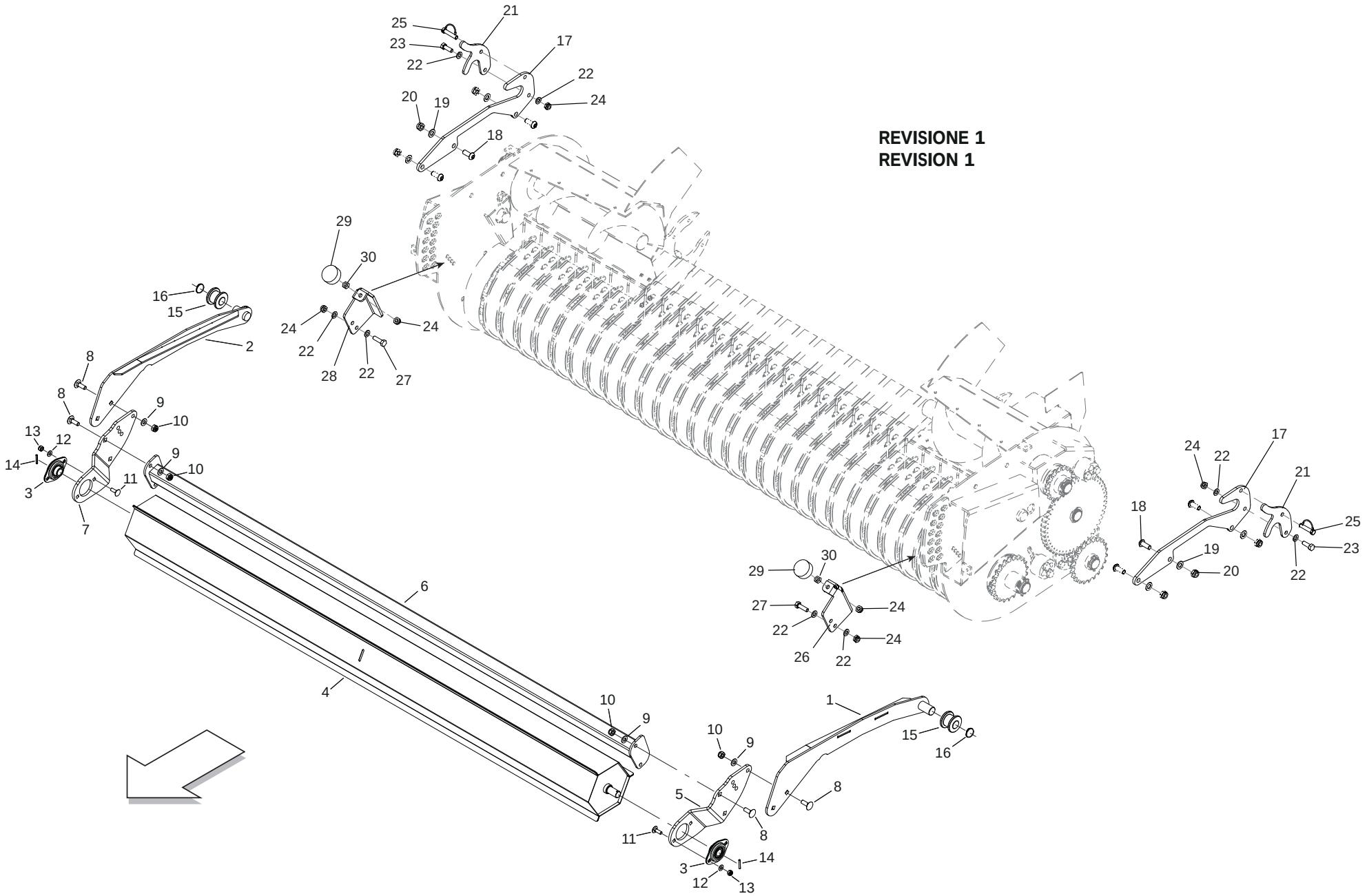




MASCHIO

cod. F07022223

# RULLO CONVOGLIATORE (PICK-UP L - PARTE 1) - REV 1
## *ROLLER CONVEYOR (PICK-UP L - PART 1) - REV 1*

TAV_131

| Pos. | Cod. | Descrizione | Description | Description | Benennung | Descripcion |
|---|---|---|---|---|---|---|
| 1 | B07SP0446 | FIANCO SX | LEFT SIDE | | | |
| 2 | B07SP0447 | FIANCO DX | RIGHT SIDE | | | |
| 3 | B02341020 | SUPP.FLANG.OV 20 LAM NBR-NSK | SUPPORT | SUPPORT | GEFLANSCHTES LAGER | |
| 4 | B07SP0448 | RULLO CONVOGLIATORE L 200 | ROLLER CONVEYOR | | | |
| 5 | B0C1P2088 | ATTACCO SX RULLO | LEFT ATTACK ROLLER | | | |
| 6 | B07SP1462 | TUBO DI RINFORZO | REINFORCE TUBE | | | |
| 7 | B0C1P2089 | ATTACCO DX RULLO | RIGHT ATTACK ROLLER | | | |
| 8 | F01060069 | VITE M10X1,5X30 U5731 8.8ZN | SCR. M10X1,5X30 U5732 4.6ZN | BOULON 10X30 5732 4.6 | SCHRAUBE 10X30 5732 4.6 | PERNO 10X30 5732 4.6 |
| 9 | F01410064 | ROS.M10 10,5X 20X 2 U6592 ZN | WASHER M10 10,5X20X2 U6592 ZN | RONDEL. M10 10,5X20X2 U6592 ZN | SCHEIBE M10 10,5X20X2 U6592 ZN | ARANDEL.M10 10,5X20X2 U6592 ZN |
| 10 | F01230202 | DADO M10X 1,5 D985 8 ZN | NUT M10 D985 | ECROU AUTOBL. M10 | SELBSTSPERR.MUTTER M10 | DADO AUTOBL. M10 |
| 11 | F01060202 | VITE M8X1,25X25 U5731 4.6ZN | SCR. M8X1,25X25 U5731 4.6ZN | VIS M8X1,25X25 U5731 4.6 | DUEBEL M8X1,25X25 U5731 4.6 ZN | TORNILLO M8X1,25X25 U5731 4.6 |
| 12 | F01410051 | ROS.M8 8,4X 17X1,6 U6592 ZN | WASHER M8 8,4X17X1,6 U6592 ZN | RONDELLE M8 8,4X17X1,6 ZN | SCHEIBE M8 8,4X17X1,6 U6592 ZN | ARANDELA M8 8,4X17X1,6 U6592ZN |
| 13 | F01230190 | DADO M8X1 D985 8ZN | NUT M8X1 D985 8ZN | ECROU M8 | MUTTER M8DADO M8 | |
| 14 | F02100065 | SPINA E.P. 4X 30 U6873 C70 BR | PIN EL. 4X30 DIN 1481 | GOUPILLE EL.4 X30 DIN 1481 | SPANNSTIFT 4X30 DIN 1481 | CLAVIJA EL.4 X30 DIN 1481 |
| 15 | B0C003712 | BOCCOLA | BUSH | COQUILLE | BUCHSE | |
| 16 | F02050101 | ANELLO E. DE 25X 1,2 U7435 C7 | SEEGER RING E. 25X1,2 7435 C70 | SEEGER E. 25X 1,2 U7435 C70 | SEEGERING E. 25X 1,2 U7435 C70 | ANILLO E. 25X 1,2 U7435 C70 |
| 17 | B0C4P0466 | ATTACCO SOSTEGNO RULLO | ATTACK ROLLER SUPPORT | | | |
| 18 | B00471230 | VITE TTEI M12X 30-8.8 UNBRA | SCREW | VIS | SCHRAUBE TTEI M12X 30-8.8 | |
| 19 | F01410076 | ROS.M12 13X 24X2,5 U6592 ZN | WASHER 12 13X 24X2,5 U6592 ZN | RONDEL. M12 13X24X2,5 U6592 ZN | SCHEIBE M12 13X24X2,5 U6592 ZN | ARANDELA M12 13 X24X2,5 ZN |
| 20 | F01230059 | DADO M12X1,75 D982 8ZN | LOCK-NUT M12X1,75 D982 8ZN | ECR.AUTO-FREI.M12X1,75 ZN | SICHERUNGMUT.M12X1,75 D982 8ZN | TUER.DE SEGUR.M12X1,75 D982 ZN |
| 21 | B0C6P0487 | GANCIO PER FIANCO SX-DX | HOOK LEFT RIGHT SIDE | | | |
| 22 | F01410064 | ROS.M10 10,5X 20X 2 U6592 ZN | WASHER M10 10,5X20X2 U6592 ZN | RONDEL. M10 10,5X20X2 U6592 ZN | SCHEIBE M10 10,5X20X2 U6592 ZN | ARANDEL.M10 10,5X20X2 U6592 ZN |
| 23 | F01020476 | VITE M10X1,5X30 U5739 8.8ZN | SCR. M10X1,5X30 U5739 8.8ZN | VIS M10X1,5X30 U5739 8.8 ZN | SCHRAUBE M10X1,5X30U5739 8.8ZN | TORNIL.M10X1,5X30 U5739 8.8 ZN |
| 24 | F01230202 | DADO M10X 1,5 D985 8 ZN | NUT M10 D985 | ECROU AUTOBL. M10 | SELBSTSPERR.MUTTER M10 | DADO AUTOBL. M10 |
| 25 | B01000021 | SPINOTTO PER MOTOZAPPA 10X45 | PIN | EPINE | STIFT | |
| 26 | B0C6P0488 | ATTACCO TAMPONE SX | LEFT BUFFER CONNECTION | | | |
| 27 | F01020479 | VITE M10X1,5X35 U5739 8.8ZN | SCR. M10X1,5X35 U5739 8.8ZN | VIS M10X1,5X35 U5739 8.8 ZN | SCHR. M10X1,5X35 U5739 8.8 ZN | TORN. M10X1,5X35 U5739 8.8 ZN |
| 28 | B0C6P0489 | ATTACCO TAMPONE DX | RIGHT BUFFER CONNECTION | | | |
| 29 | B07049749 | TAMPONE 50X21 M10 | BUMPER 50X21 M10 | TAMPON 50X21 M10 | PUFFER 50X21 M10 | |
| 30 | F01200270 | DADO M10X1,5 U5588 CL8 ZN | NUT M10X1,5 U5588 6.8ZN | ECROU M10X 1,5 U5588 6.8 ZN | MUTTER M10X 1,5 U5588 6.8 ZN | TUERCA M10X 1,5 U5588 6.8 ZN |

# TAV_135

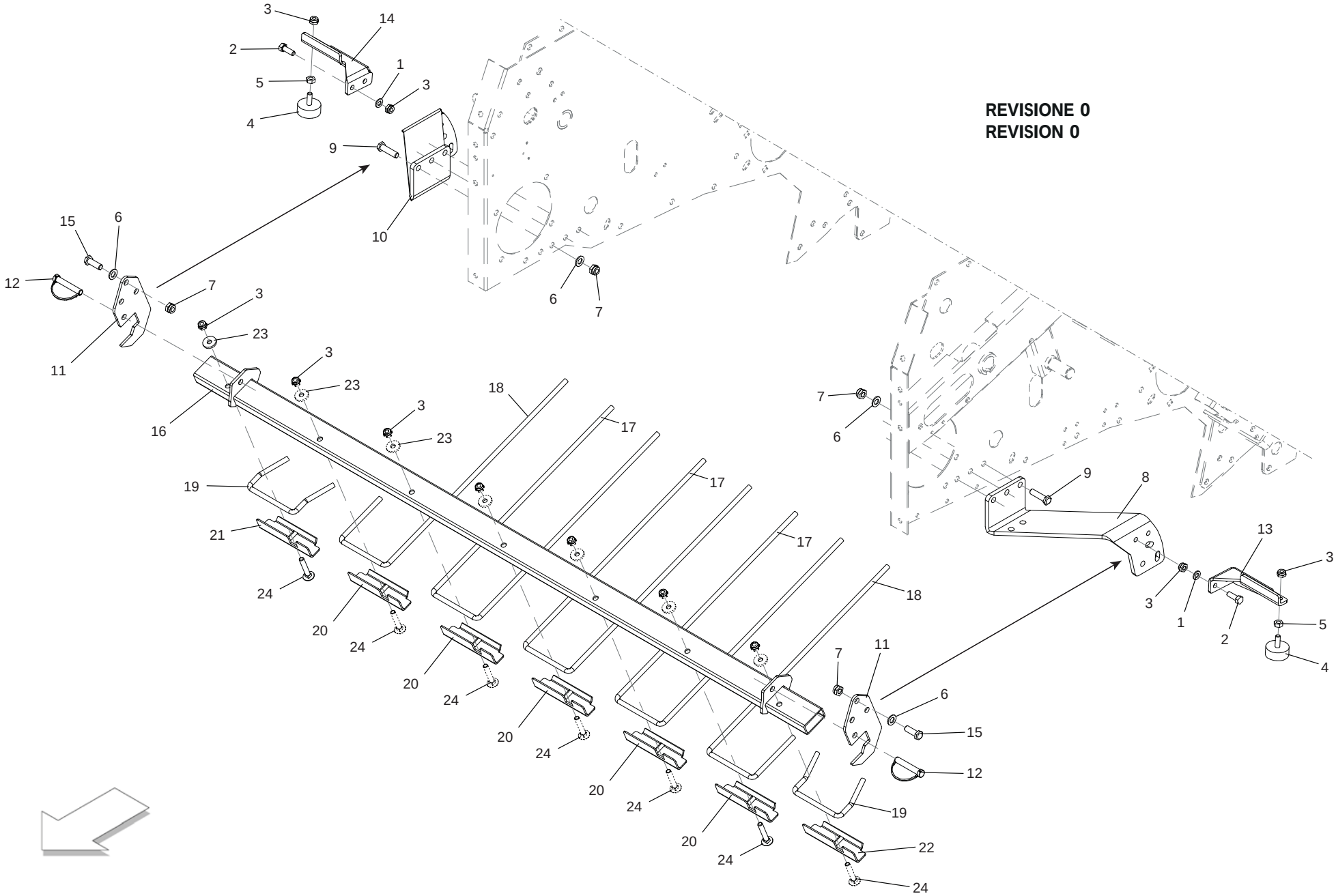




MASCHIO

cod. F07022223

# RULLO CONVOGLIATORE (PICK-UP L - PARTE 2) - REV 0
## *ROLLER CONVEYOR (PICK-UP L - PART 2) - REV 0*

TAV_135

| Pos. | Cod. | Descrizione | Description | Description | Benennung | Descripcion |
|---|---|---|---|---|---|---|
| 01 | F01410064 | ROS.M10 10,5X 18X 2 U6592 ZN | WASHER | RONDELLE | SCHEIBE | |
| 02 | F01020476 | VITE M10X1,5X30 U5739 8.8ZN | SCR. M10X1,5X30 U5739 8.8ZN | VIS M10X1,5X30 U5739 8.8 ZN | SCHRAUBE M10X1,5X30U5739 8.8ZN | TORNIL.M10X1,5X30 U5739 8.8 ZN |
| 03 | F01230202 | DADO M10X1,25 D985 8 ZN | SELF-LOCKING NUT | ECROU NYLSTOP | SELBSTSICHERNDE MUTTER M10-5S | |
| 04 | B07049749 | TAMPONE 50X21 M10 | BUMPER 50X21 M10 | TAMPON 50X21 M10 | PUFFER 50X21 M10 | |
| 05 | F01200270 | DADO M10X1,5 U5588 CL8 ZN | NUT M10X1,5 U5588 6.8ZN | ECROU M10X 1,5 U5588 6.8 ZN | MUTTER M10X 1,5 U5588 6.8 ZN | TUERCA M10X 1,5 U5588 6.8 ZN |
| 06 | F01410076 | ROS.M12 13X 20X2,0 U1749 ZN | WASHER | RONDELLE | SCHEIBE | |
| 07 | B00920412 | DADO M12X1,75 D985 8 ZN | NUT | ECROU | SELBSTSICHERNDE MUTTER M12-5S | |
| 08 | B0C4P0441 | STAFFA SX ATTACCO BARRA PORTAD | BRACKET | | | |
| 09 | F01020516 | VITE M12X1,75X45 U5739 8.8ZN | SCR. M12X1,75X45 U5739 8.8ZN | VIS M12X1,75X45 U5739 8.8 ZN | SCHARAUBE M12X1,75X45 U5739 ZN | TORNIL.M12X1,75X45 U5739 8.8ZN |
| 10 | B0C4P0442 | STAFFA DX ATTACCO BARRA PORTAD | RIGHT BRACKET | | | |
| 11 | B0C6P0878 | UNIONE STAFFE-BARRA PORTADENTE | UNION BRACKETS | | | |
| 12 | B011D1270 | SPINOTTO PER MOTOZAPPA 12 70 | PIN TO HOE 12 70 . | | | |
| 13 | B0C6P0884 | ATTACCO SX TAMPONE SUPERIORE | LEFT ATTACK | | | |
| 14 | B0C6P0885 | ATTACCO DX TAMPONE SUPERIORE | RIGHT ATTACK | | | |
| 15 | F01020512 | VITE M12X1,75X35 U5739 8.8ZN | SCR. M12X1,75X35 U5739 8.8ZN | VIS M12X1,75X35 5739 8.8 ZN | SCHR. M12X1,75X35 5739 8.8 ZN | TORN. M12X1,75X35 5739 8.8 ZN |
| 16 | B07SP0701 | BARRA PORTADENTI | TINE HOLDER BAR | | | |
| 17 | B0C2P0383 | DENTE L=590 | TOOTH L=590 | | | |
| 18 | B0C2P0384 | DENTE L=590 E L=137 | TOOTH L=590 E L=137 | | | |
| 19 | B0C2P0385 | DENTE LATERALE L=111 | LATERAL TOOTH | | | |
| 20 | B0C6P0483 | FERMO DENTE | TOOTH STOP | | | |
| 21 | B0C6P0888 | FERMO DX DENTE | RIGHT TOOTH STOP | | | |
| 22 | B0C6P0887 | FERMO SX DENTE | LEFT TOOTH STOP | | | |
| 23 | B01524584 | RALLA 10 30 4 | FIFTH WHEEL | BUTEE | SCHEIBE | |
| 24 | F01060081 | VITE M10X1,5X60 U5731 8.8ZN | SCR. M10X1,5X60 U5732 4.6ZN | VIS 10X60 5732 4.6 ZN | SCHRAUBE 10X60 5732 4.6 ZN | TORNILLO 10 60 5732 4 6 ZN |

TAV_136

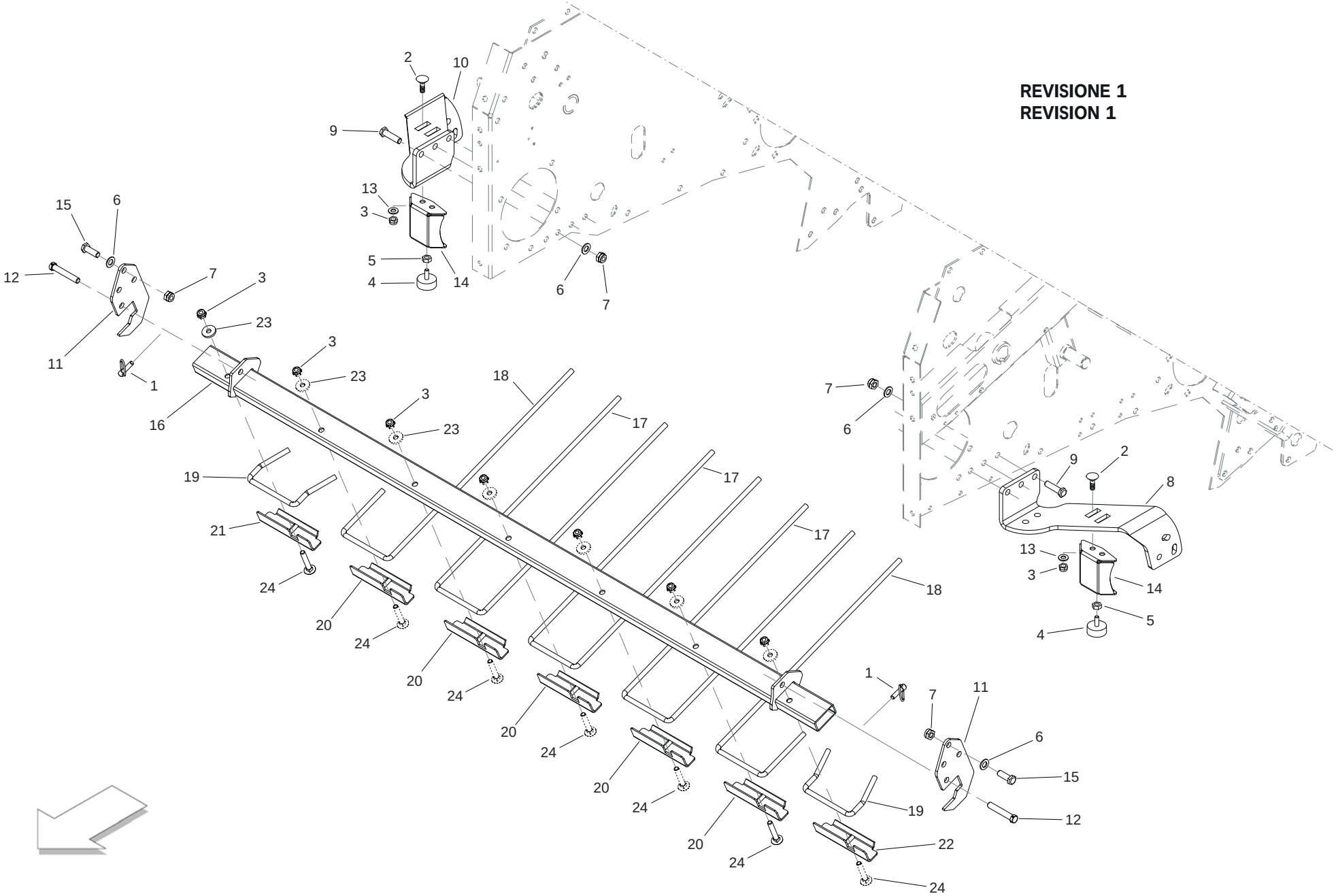




MASCHIO

cod. F07022223

# RULLO CONVOGLIATORE (PICK-UP L - PARTE 2) - REV 1
## *ROLLER CONVEYOR (PICK-UP L - PART 2) - REV 1*

TAV_136

| Pos. | Cod. | Descrizione | Description | Description | Benennung | Descripcion |
|---|---|---|---|---|---|---|
| 01 | F02200486 | SPINA SCATTO D.6 X27 ZN | SNAP PIN D.6 X27 ZN | FICHE A DETENTE D6 X 27 ZN | EINRASTSTIFT D6 X 27 ZN | CLAVIJA DE MUELLE D6 X27 ZN |
| 02 | F01060069 | VITE M10X1,5X30 U5731 8.8ZN | SCR. M10X1,5X30 U5732 4.6ZN | BOULON 10X30 5732 4.6 | SCHRAUBE 10X30 5732 4.6 | PERNO 10X30 5732 4.6 |
| 03 | F01230202 | DADO M10X 1,5 D985 8 ZN | NUT M10 D985 | ECROU AUTOBL. M10 | SELBSTSPERR.MUTTER M10 | DADO AUTOBL. M10 |
| 04 | B07049749 | TAMPONE 50X21 M10 | BUMPER 50X21 M10 | TAMPON 50X21 M10 | PUFFER 50X21 M10 | |
| 05 | F01200270 | DADO M10X1,5 U5588 CL8 ZN | NUT M10X1,5 U5588 6.8ZN | ECROU M10X 1,5 U5588 6.8 ZN | MUTTER M10X 1,5 U5588 6.8 ZN | TUERCA M10X 1,5 U5588 6.8 ZN |
| 06 | F01410076 | ROS.M12 13X 24X2,5 U6592 ZN | WASHER 12 13X 24X2,5 U6592 ZN | RONDEL. M12 13X24X2,5 U6592 ZN | SCHEIBE M12 13X24X2,5 U6592 ZN | ARANDELA M12 13 X24X2,5 ZN |
| 07 | F01230213 | DADO M12X1,75 U7474 CL8 ZN | NUT M12X1,75 U7474 6SZN | ECROU AUTOBL. M12 | SELBSTSPERR.MUTTER M12 | DADO AUTOBL. M12 |
| 08 | B0C1P2081 | ATTACCO SX | LEFT ATTACK | | | |
| 09 | F01020516 | VITE M12X1,75X45 U5739 8.8ZN | SCR. M12X1,75X45 U5739 8.8ZN | VIS M12X1,75X45 U5739 8.8 ZN | SCHARAUBE M12X1,75X45 U5739 ZN | TORNIL.M12X1,75X45 U5739 8.8ZN |
| 10 | B0C1P2082 | ATTACCO DX | RIGHT ATTACK | | | |
| 11 | B0C1P1462 | UNIONE STAFFE-BARRA PORTADENTE | UNION BRACKETS-ROD SUPP.TEETH | | | |
| 12 | B0C1P1632 | PERNO D.12 F.6 | PIN D.12 F.6 | | | |
| 13 | F01410064 | ROS.M10 10,5X 20X 2 U6592 ZN | WASHER M10 10,5X20X2 U6592 ZN | RONDEL. M10 10,5X20X2 U6592 ZN | SCHEIBE M10 10,5X20X2 U6592 ZN | ARANDEL.M10 10,5X20X2 U6592 ZN |
| 14 | B0C1P2087 | ATTACCO TAMPONE | ATTACK BUFFER | | | |
| 15 | F01020512 | VITE M12X1,75X35 U5739 8.8ZN | SCR. M12X1,75X35 U5739 8.8ZN | VIS M12X1,75X35 5739 8.8 ZN | SCHR. M12X1,75X35 5739 8.8 ZN | TORN. M12X1,75X35 5739 8.8 ZN |
| 16 | B07SP0701 | BARRA PORTADENTI | TINE HOLDER BAR | | | |
| 17 | B0C2P0383 | DENTE L=590 | TOOTH L=590 | | | |
| 18 | B0C2P0384 | DENTE L=590 E L=137 | TOOTH L=590 E L=137 | | | |
| 19 | B0C2P0385 | DENTE LATERALE L=111 | LATERAL TOOTH | | | |
| 20 | B0C6P0483 | FERMO DENTE | TOOTH STOP | | | |
| 21 | B0C6P0888 | FERMO DX DENTE | RIGHT TOOTH STOP | | | |
| 22 | B0C6P0887 | FERMO SX DENTE | LEFT TOOTH STOP | | | |
| 23 | B01524584 | RALLA 10,5 30 4 | FIFTH WHEEL | BUTEE | SCHEIBE | |
| 24 | F01060081 | VITE M10X1,5X60 U5731 8.8ZN | SCR. M10X1,5X60 U5732 4.6ZN | VIS 10X60 5732 4.6 ZN | SCHRAUBE 10X60 5732 4.6 ZN | TORNILLO 10X60 5732 4 6 ZN |

# TAV_140

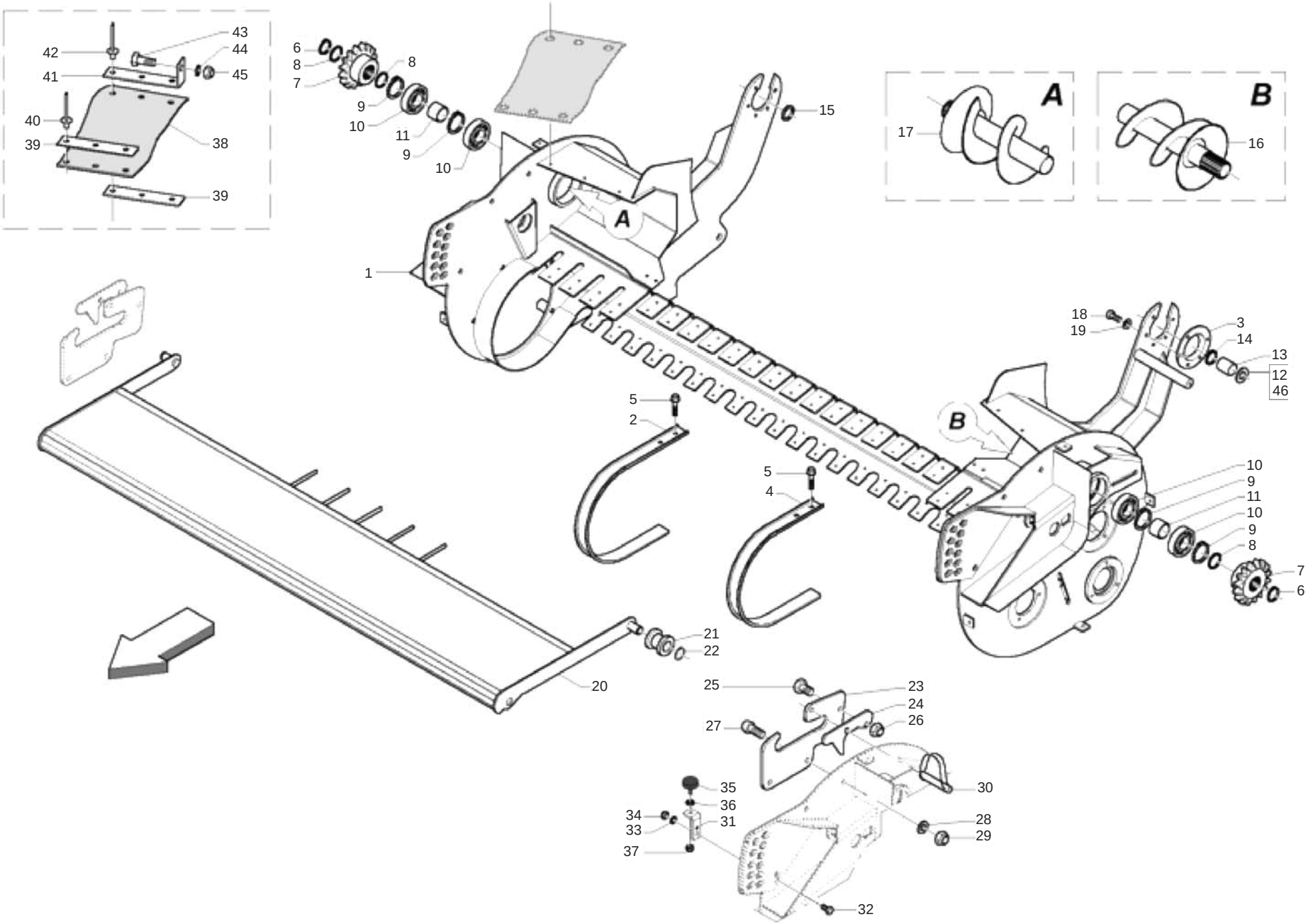




MASCHIO

cod. F07022223

# PICK-UP M CUT
## *PICK-UP M CUT*

TAV_140

| Pos. | Cod. | Descrizione | Description | Description | Benennung | Descripcion |
|---|---|---|---|---|---|---|
| 1 | B07S01645 | TELAIO PU M CUT | PICK_UP FRAME M CUT | | | |
| 2 | B0C003304 | FASCIA CENTRALE PICK UP TOPCUT | PICK-UP CENTRAL BAND TOPCUT | BANDE CENTRALE PICK-UP TOPCUT | ZENTRALES PICK-UP BAND | |
| 3 | B01300649 | FLANGIA | FLANGE | FLASQUE | PICK-UP FLANSCH | |
| 4 | B0C003183 | FASCIA LATERALE PICK-UP | LATERAL BAND PICK-UP | BANDE LATERALE | SEITENBAND | |
| 5 | B00370615 | VITE M 6X16 ZN SEZ.TRIL. U8111 | SCREW | VIS | SCHRAUBE | |
| 6 | B01700035 | ANEL. D ARR. ALB. 35-E UNI3653 | SEEGER RING | BAGUE SEEGER | SEEGERRING 35-E | |
| 7 | B03400270 | INGR. Z=16-3 4 ISO CON MOZZO | GEAR Z=16 3 4 | ENGRANAGE | ZAHNRAD Z=16 3 4 | |
| 8 | B01534416 | SPES. 35 43 1 ZINCATO | SHIM | ENTRETOISE | AUSGLEICHSCHEIBE 35X43X1 | |
| 9 | F02050425 | ANEL. D ARR. FORO 80-I UNI3654 | SEEGER RING | BAGUE SEEGER | SEEGERRING 80-I | |
| 10 | B02040002 | CUSCINETTO 6307-2RS CAT.KST004 | BEARING | ROULEMENT CAT.KST004 | LAGER 6307-2RS | |
| 11 | B01300739 | DISTANZIALE 35X42X41 | SPACER | ENTRETOISE | DISTANZSTUECK 35X42X41 | |
| 12 | B01527654 | RALLA 45 62 4 | FIFTH WHEEL | BUTEE | SCHEIBE | |
| 13 | B02500010 | BRONZINA 45 53 25 | BUSHING | COUSSINET | BRONZEBUCHSE 45 53 25 | |
| 14 | B01700045 | ANEL. D ARR. ALB. 45-E UNI3653 | SEEGER RING | BAGUE SEEGER | SEEGERRING 45-E | |
| 15 | B01300003 | RALLA ATTACCO PU | WASHER ATTACK PICK-UP | | | |
| 16 | B07S01652 | COCLEA SX PU 200 | LEFT PICK-UP AUGER 200 | VIS GAUCHE PU 200 | LINKE PICK-UP ZUBRINGERSCHNECK | |
| 17 | B07S01651 | COCLEA DX PU 200 | RIGHT PICK-UP AUGER 200 | VIS DROIT PU 200 | RECHTE PICK-UP ZUBRINGERSCHNEC | |
| 18 | F01020472 | VITE M10X1,5X25 U5739 8.8ZN | SCR. M10X1,5X25 U5739 8.8ZN | VIS M10X1,5X25 U5739 8.8 ZN | SCHRAUBE M10X1,5X25 U5739 8.8 | TORNILLO 10X25 U5739 8.8 ZN |
| 19 | F01410062 | ROS.M10 10,5X 18X 2 U6592 ZN | WASHER M10 10,5X 18X 2 U6592 | RONDELLE M10 10,5X18X2 ZN | DICHTUNGSRING M10 10,5X18X2 ZN | RONDANA M10 10,5X18X2 ZN |
| 20 | B07S01849G | LAMIERA CONVOGLIAMENTO PU M | BAFFLE PLATE PU M | | | |
| 21 | B0C003712 | BOCCOLA | BUSH | COQUILLE | BUCHSE | |
| 22 | F02050101 | ANEL. D ARR. ALB. 25-E UNI3653 | SEEGER RING | BAGUE SEEGER | SEEGERRING 25-E | |
| 23 | B0C100017G | ATTACCO LAMIERA CONVOGLIAMENTO | CONVEYOR PLATE ATTACHMENT | | | |
| 24 | B0C004002G | GANCIO | HOOK | | | |
| 25 | F01020510 | VITE M12X1,75X30 U5739 8.8ZN | SCR. M12X1,75X30 U5739 8.8ZN | VIS M12X1,75X30 U5739 8.8ZN | SCHRAU.M12X1,75X30 U5739 8.8ZN | TORN. M12X1,75X30 U5739 8.8ZN |
| 26 | F01230059 | DADO M12X1,75 D982 8ZN | LOCK-NUT M12X1,75 D982 8ZN | ECR.AUTO-FREI.M12X1,75 ZN | SICHERUNGMUT.M12X1,75 D982 8ZN | TUER.DE SEGUR.M12X1,75 D982 Z |
| 27 | B00471230 | VITE TTEI M12X 30-8.8 UNBRA | SCREW | VIS | SCHRAUBE TTEI M12X 30-8.8 | |
| 28 | F01410076 | ROS.M12 13X 20X2,0 U1749 ZN | WASHER | RONDELLE | SCHEIBE | |
| 29 | F01230059 | DADO M12X1,75 D982 8ZN | LOCK-NUT M12X1,75 D982 8ZN | ECR.AUTO-FREI.M12X1,75 ZN | SICHERUNGMUT.M12X1,75 D982 8ZN | TUER.DE SEGUR.M12X1,75 D982 Z |
| 30 | B01000021 | SPINOTTO PER MOTOZAPPA 10X45 | PIN | EPINE | STIFT | |
| 31 | B0C005187 | ATTACCO TAMPONE | PLUG ATTACHMENT | ATTELAGE TAMPON | PROPFENBEFESTIGUNG | |
| 32 | F01020476 | VITE M10X1,5X30 U5739 8.8ZN | SCR. M10X1,5X30 U5739 8.8ZN | VIS M10X1,5X30 U5739 8.8 ZN | SCHRAUBE M10X1,5X30U5739 8.8ZN | TORNIL.M10X1,5X30 U5739 8.8 ZN |
| 33 | F01410062 | ROS.M10 10,5X 18X 2 U6592 ZN | WASHER M10 10,5X 18X 2 U6592 | RONDELLE M10 10,5X18X2 ZN | DICHTUNGSRING M10 10,5X18X2 ZN | RONDANA M10 10,5X18X2 ZN |
| 34 | F01230202 | DADO M10X1,25 D985 8 ZN | SELF-LOCKING NUT | ECROU NYLSTOP | SELBSTSICHERNDE MUTTER M10-5S | |
| 35 | B07049749 | TAMPONE 50X21 M10 | BUMPER 50X21 M10 | TAMPON 50X21 M10 | PUFFER 50X21 M10 | |
| 36 | F01200270 | DADO M10X1,5 U5588 CL8 ZN | NUT M10X1,5 U5588 6.8ZN | ECROU M10X 1,5 U5588 6.8 ZN | MUTTER M10X 1,5 U5588 6.8 ZN | TUERCA M10X 1,5 U5588 6.8 ZN |
| 37 | F01230202 | DADO M10X1,25 D985 8 ZN | SELF-LOCKING NUT | ECROU NYLSTOP | SELBSTSICHERNDE MUTTER M10-5S | |
| 38 | B07V00074 | PROT. COCLEA PU 180 | AUGER PROTECTION | PROTECTION PELLETEUSE PU 180 | SCHNECKENSCHUTZ | |
| 39 | B0C1P0583 | PIATTINO DI FISSAGGIO | FIXING PLATE | | | |
| 40 | B01000013 | RIVETTO STR. 5X18 U9200A AL | RIVET | RIVET | ABREISSNIETEN 6X18 | |
| 41 | B0C002409 | SOSTEGNO GOMMA PUL | RUBBER SUPPORT | SUPPORT PNEUS | GUMMIHALTER | |
| 42 | B01000012 | RIVETTO STR. 6,4X22 ACCIAIO | RIVET | RIVET | ABREISSNIETEN 6X26 | |
| 43 | F01020472 | VITE M10X1,5X25 U5739 8.8ZN | SCR. M10X1,5X25 U5739 8.8ZN | VIS M10X1,5X25 U5739 8.8 ZN | SCHRAUBE M10X1,5X25 U5739 8.8 | TORNILLO 10X25 U5739 8.8 ZN |
| 44 | F01410062 | ROS.M10 10,5X 18X 2 U6592 ZN | WASHER M10 10,5X 18X 2 U6592 | RONDELLE M10 10,5X18X2 ZN | DICHTUNGSRING M10 10,5X18X2 ZN | RONDANA M10 10,5X18X2 ZN |
| 45 | F01230202 | DADO M10X1,25 D985 8 ZN | SELF-LOCKING NUT | ECROU NYLSTOP | SELBSTSICHERNDE MUTTER M10-5S | |
| 46 | B01547230 | SPES. 45 62 2 | SHIM | ENTRETOISE | SCHEIBE | |

# TAV_145

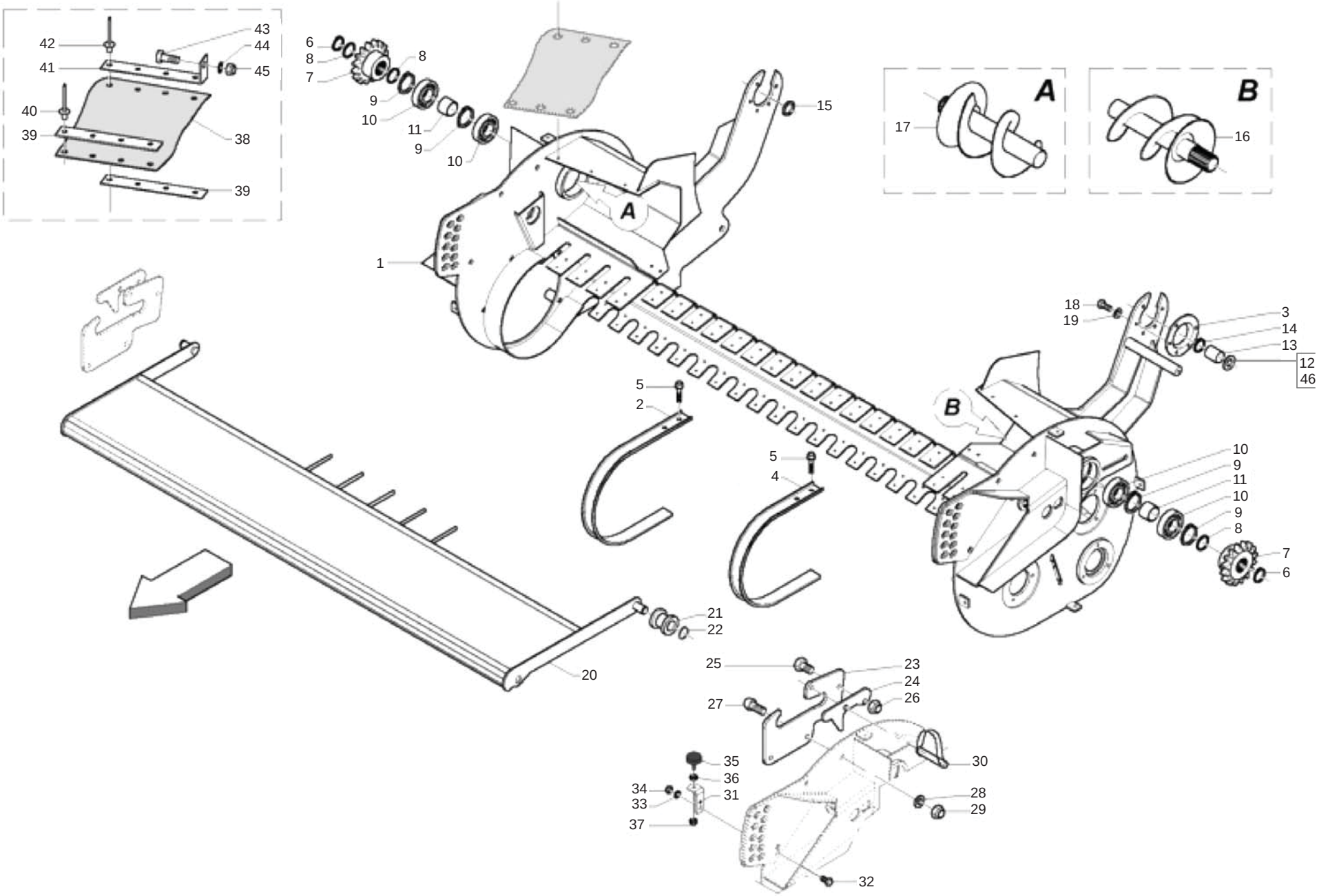




MASCHIO

cod. F07022223

# PICK-UP L CUT
## *PICK-UP L CUT*

TAV_145

| Pos. | Cod. | Descrizione | Description | Description | Benennung | Descripcion |
|---|---|---|---|---|---|---|
| 1 | B07S01650 | TELAIO PU L CUT | PICK-UP FRAME CUT | | | |
| 2 | B0C003304 | FASCIA CENTRALE PICK UP TOPCUT | PICK-UP CENTRAL BAND TOPCUT | BANDE CENTRALE PICK-UP TOPCUT | ZENTRALES PICK-UP BAND | |
| 3 | B01300649 | FLANGIA | FLANGE | FLASQUE | PICK-UP FLANSCH | |
| 4 | B0C003183 | FASCIA LATERALE PICK-UP | LATERAL BAND PICK-UP | BANDE LATERALE | SEITENBAND | |
| 5 | B00370615 | VITE M 6X16 ZN SEZ.TRIL. U8111 | SCREW | VIS | SCHRAUBE | |
| 6 | B01700035 | ANEL. D ARR. ALB. 35-E UNI3653 | SEEGER RING | BAGUE SEEGER | SEEGERRING 35-E | |
| 7 | B03400270 | INGR. Z=16-3 4 ISO CON MOZZO | GEAR Z=16 3 4 | ENGRANAGE | ZAHNRAD Z=16 3 4 | |
| 8 | B01534416 | SPES. 35 43 1 ZINCATO | SHIM | ENTRETOISE | AUSGLEICHSCHEIBE 35X43X1 | |
| 9 | F02050425 | ANEL. D ARR. FORO 80-I UNI3654 | SEEGER RING | BAGUE SEEGER | SEEGERRING 80-I | |
| 10 | B02040002 | CUSCINETTO 6307-2RS CAT.KST004 | BEARING | ROULEMENT CAT.KST004 | LAGER 6307-2RS | |
| 11 | B01300739 | DISTANZIALE 35X42X41 | SPACER | ENTRETOISE | DISTANZSTUECK 35X42X41 | |
| 12 | B01547230 | SPES. 45 62 2 | SHIM | ENTRETOISE | SCHEIBE | |
| 13 | B02500010 | BRONZINA 45 53 25 | BUSHING | COUSSINET | BRONZEBUCHSE 45 53 25 | |
| 14 | B01700045 | ANEL. D ARR. ALB. 45-E UNI3653 | SEEGER RING | BAGUE SEEGER | SEEGERRING 45-E | |
| 15 | B01300003 | RALLA ATTACCO PU | WASHER ATTACK PICK-UP | | | |
| 16 | B07S01654 | COCLEA SX PU 220 | LEFT PICK-UP AUGER 220 | VIS GAUCHE PU 220 | LINKE PICK-UP ZUBRINGERSCHNECK | |
| 17 | B07S01653 | COCLEA DX PU 220 | RIGHT PICK-UP AUGER 220 | VIS DROIT PU 220 | RECHTE PICK-UP ZUBRINGERSCHNEC | |
| 18 | F01020472 | VITE M10X1,5X25 U5739 8.8ZN | SCR. M10X1,5X25 U5739 8.8ZN | VIS M10X1,5X25 U5739 8.8 ZN | SCHRAUBE M10X1,5X25 U5739 8.8 | TORNILLO 10X25 U5739 8.8 ZN |
| 19 | F01410062 | ROS.M10 10,5X 18X 2 U6592 ZN | WASHER M10 10,5X 18X 2 U6592 | RONDELLE M10 10,5X18X2 ZN | DICHTUNGSRING M10 10,5X18X2 ZN | RONDANA M10 10,5X18X2 ZN |
| 20 | B07S01848G | LAMIERA CONVOGLIAMENTO PU L | WIDE PICK-UP L BAFFLE PLATE | | | |
| 21 | B0C003712 | BOCCOLA | BUSH | COQUILLE | BUCHSE | |
| 22 | F02050101 | ANEL. D ARR. ALB. 25-E UNI3653 | SEEGER RING | BAGUE SEEGER | SEEGERRING 25-E | |
| 23 | B0C100017G | ATTACCO LAMIERA CONVOGLIAMENTO | CONVEYOR PLATE ATTACHMENT | | | |
| 24 | B0C004002G | GANCIO | HOOK | | | |
| 25 | F01020510 | VITE M12X1,75X30 U5739 8.8ZN | SCR. M12X1,75X30 U5739 8.8ZN | VIS M12X1,75X30 U5739 8.8ZN | SCHRAU.M12X1,75X30 U5739 8.8ZN | TORN. M12X1,75X30 U5739 8.8ZN |
| 26 | F01230059 | DADO M12X1,75 D982 8ZN | LOCK-NUT M12X1,75 D982 8ZN | ECR.AUTO-FREI.M12X1,75 ZN | SICHERUNGMUT.M12X1,75 D982 8ZN | TUER.DE SEGUR.M12X1,75 D982 ZN |
| 27 | B00471230 | VITE TTEI M12X 30-8.8 UNBRA | SCREW | VIS | SCHRAUBE TTEI M12X 30-8.8 | |
| 28 | F01410076 | ROS.M12 13X 20X2,0 U1749 ZN | WASHER | RONDELLE | SCHEIBE | |
| 29 | F01230059 | DADO M12X1,75 D982 8ZN | LOCK-NUT M12X1,75 D982 8ZN | ECR.AUTO-FREI.M12X1,75 ZN | SICHERUNGMUT.M12X1,75 D982 8ZN | TUER.DE SEGUR.M12X1,75 D982 ZN |
| 30 | B01000021 | SPINOTTO PER MOTOZAPPA 10X45 | PIN | EPINE | STIFT | |
| 31 | B0C005187 | ATTACCO TAMPONE | PLUG ATTACHMENT | ATTELAGE TAMPON | PROPFENBEFESTIGUNG | |
| 32 | F01020476 | VITE M10X1,5X30 U5739 8.8ZN | SCR. M10X1,5X30 U5739 8.8ZN | VIS M10X1,5X30 U5739 8.8 ZN | SCHRAUBE M10X1,5X30U5739 8.8ZN | TORNIL.M10X1,5X30 U5739 8.8 ZN |
| 33 | F01410062 | ROS.M10 10,5X 18X 2 U6592 ZN | WASHER M10 10,5X 18X 2 U6592 | RONDELLE M10 10,5X18X2 ZN | DICHTUNGSRING M10 10,5X18X2 ZN | RONDANA M10 10,5X18X2 ZN |
| 34 | F01230202 | DADO M10X1,25 D985 8 ZN | SELF-LOCKING NUT | ECROU NYLSTOP | SELBSTSICHERNDE MUTTER M10-5S | |
| 35 | B07049749 | TAMPONE 50X21 M10 | BUMPER 50X21 M10 | TAMPON 50X21 M10 | PUFFER 50X21 M10 | |
| 36 | F01200270 | DADO M10X1,5 U5588 CL8 ZN | NUT M10X1,5 U5588 6.8ZN | ECROU M10X 1,5 U5588 6.8 ZN | MUTTER M10X 1,5 U5588 6.8 ZN | TUERCA M10X 1,5 U5588 6.8 ZN |
| 37 | F01230202 | DADO M10X1,25 D985 8 ZN | SELF-LOCKING NUT | ECROU NYLSTOP | SELBSTSICHERNDE MUTTER M10-5S | |
| 38 | B07V00081 | PROT. COCLEA PU 200 | AUGER GUARD | PROTECTION PELLETEUSE PU 200 | SCHNECKENSCHUTZ | |
| 39 | B0C003730 | FISSAGGIO GOMMA | FIXING PLATE | FIXAGE CAOUTCHOUC | GUMMIFIXIERPLATTE | |
| 40 | B01000013 | RIVETTO STR. 5X18 U9200A AL | RIVET | RIVET | ABREISSNIETEN 6X18 | |
| 41 | B0C003729 | SOSTEGNO GOMMA | RUBBER SUPPORT | SUPPORT CAOUTCHOUC | GUMMIHALTER | |
| 42 | B01000012 | RIVETTO STR. 6,4X22 ACCIAIO | RIVET | RIVET | ABREISSNIETEN 6X26 | |
| 43 | F01020472 | VITE M10X1,5X25 U5739 8.8ZN | SCR. M10X1,5X25 U5739 8.8ZN | VIS M10X1,5X25 U5739 8.8 ZN | SCHRAUBE M10X1,5X25 U5739 8.8 | TORNILLO 10X25 U5739 8.8 ZN |
| 44 | F01410062 | ROS.M10 10,5X 18X 2 U6592 ZN | WASHER M10 10,5X 18X 2 U6592 | RONDELLE M10 10,5X18X2 ZN | DICHTUNGSRING M10 10,5X18X2 ZN | RONDANA M10 10,5X18X2 ZN |
| 45 | F01230202 | DADO M10X1,25 D985 8 ZN | SELF-LOCKING NUT | ECROU NYLSTOP | SELBSTSICHERNDE MUTTER M10-5S | |
| 46 | B01527654 | RALLA 45 62 4 | FIFTH WHEEL | BUTEE | SCHEIBE | |

TAV_150

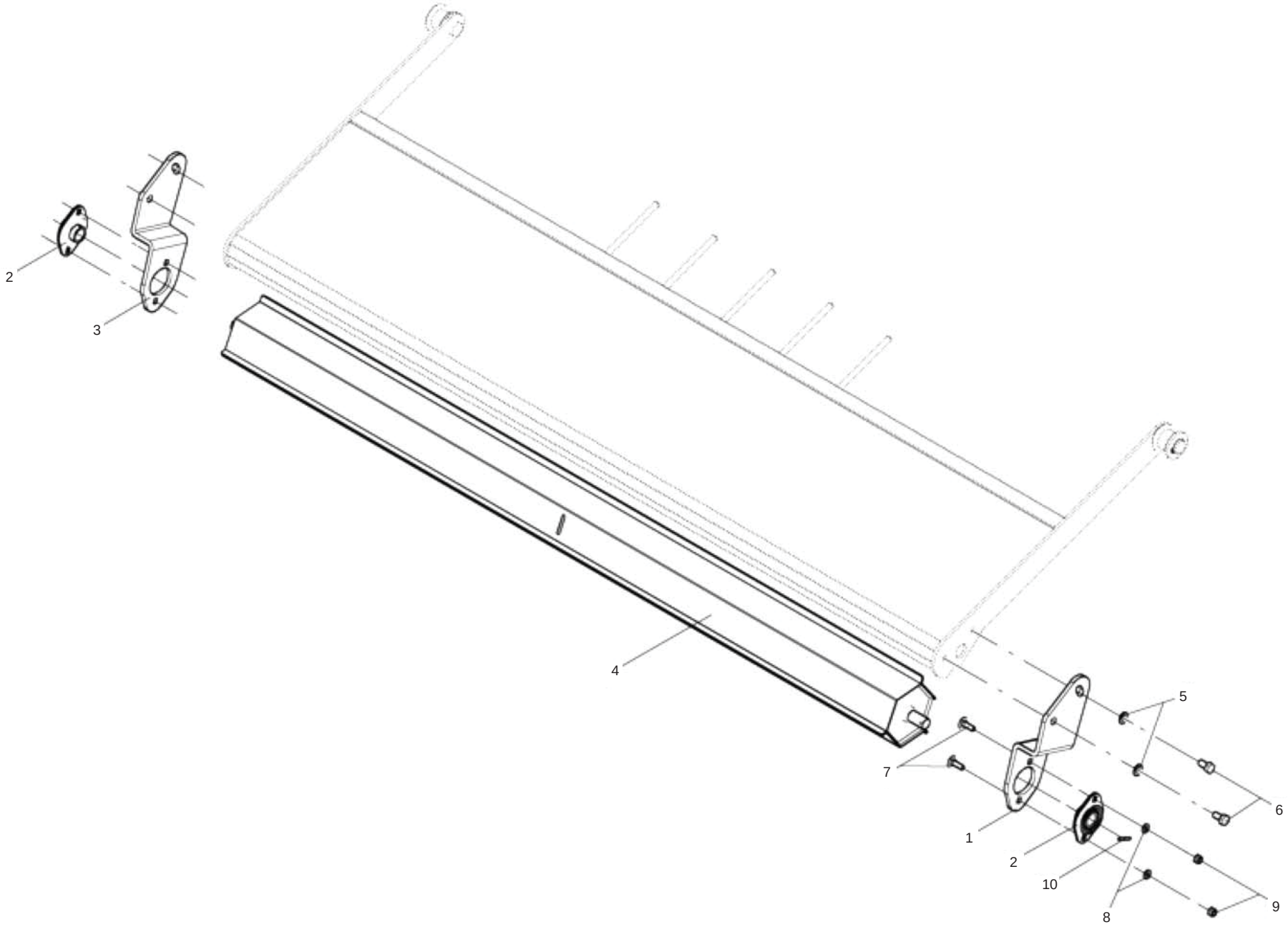




MASCHIO

cod. F07022223

# RULLO CONVOGLIATORE CUT (PICK-UP M)
## *ROLLER CONVEYOR CUT (PICK-UP M)*

TAV_150

| Pos. | Cod. | Descrizione | Description | Description | Benennung | Descripcion |
|---|---|---|---|---|---|---|
| 1 | B0C4P0187 | ATTACCO SX | ATTACCO SX . | | | |
| 2 | B02341020 | SUPP.FLANG.OV 20 LAM NBR-NSK | SUPPORT | SUPPORT | GEFLANSCHTES LAGER | |
| 3 | B0C4P0188 | ATTACCO DX | ATTACCO DX . | | | |
| 4 | B07SP0341 | RULLO CONVOGLIATORE M | CONVEYOR ROLLER M | | | |
| 5 | B01411020 | RONDELLA PIANA LARGA 10X30 | WIDE FLAT WASHER 10X30 | | | |
| 6 | F01020470 | VITE M10X1,5X20 U5739 8.8ZN | SCR. M10X1,5X20 U5739 8.8ZN | VIS M10X1,5X20 U5739 8.8 ZN | SCHRAUBE M10X1,5X20 U5739 ZN | TORNILLOM10X1,5X20 U5739 8.8ZN |
| 7 | F01060202 | VITE M8X1,25X25 U5731 4.6ZN | SCR. M8X1,25X25 U5731 4.6ZN | VIS M8X1,25X25 U5731 4.6 | DUEBEL M8X1,25X25 U5731 4.6 ZN | TORNILLO M8X1,25X25 U5731 4.6 |
| 8 | F01410051 | ROS.M8 8,4X 17X1,6 U6592 ZN | WASHER M8 8,4X17X1,6 U6592 ZN | RONDELLE | SCHEIBE | |
| 9 | B00920208 | DADO M8X1 D985 8ZN | NUT M8X1 D985 8ZN | ECROU | SELBSTSICHERNDE MUTTER M8-5S | |
| 10 | F02100065 | SPINA E.P. 4X 30 U6873 C70 BR | PIN EL. 4X30 DIN 1481 | GOUPILLE EL.4 X30 DIN 1481 | SPANNSTIFT 4X30 DIN 1481 | CLAVIJA EL.4 X30 DIN 1481 |

TAV_155

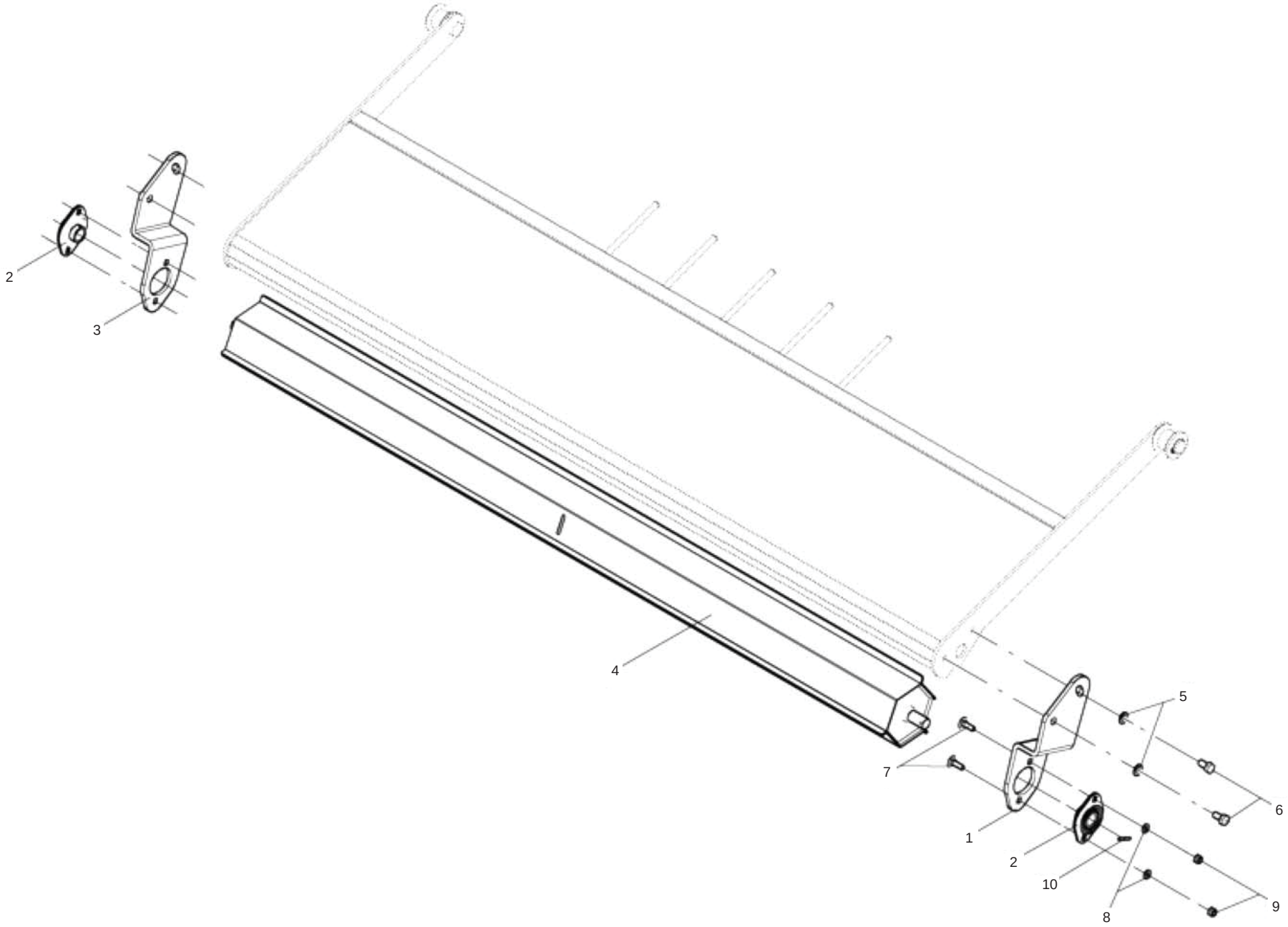




MASCHIO

cod. F07022223

# RULLO CONVOGLIATORE CUT (PICK-UP L)
## *ROLLER CONVEYOR CUT (PICK-UP L)*

TAV_155

| Pos. | Cod. | Descrizione | Description | Description | Benennung | Descripcion |
|---|---|---|---|---|---|---|
| 1 | B0C4P0187 | ATTACCO SX | ATTACCO SX . | | | |
| 2 | B02341020 | SUPP.FLANG.OV 20 LAM NBR-NSK | SUPPORT | SUPPORT | GEFLANSCHTES LAGER | |
| 3 | B0C4P0188 | ATTACCO DX | ATTACCO DX . | | | |
| 4 | B07SP0342 | RULLO CONVOG. L | RULLO CONVOG. L . | | | |
| 5 | B01411020 | RONDELLA PIANA LARGA 10X30 | WIDE FLAT WASHER 10X30 | | | |
| 6 | F01020470 | VITE M10X1,5X20 U5739 8.8ZN | SCR. M10X1,5X20 U5739 8.8ZN | VIS M10X1,5X20 U5739 8.8 ZN | SCHRAUBE M10X1,5X20 U5739 ZN | TORNILLOM10X1,5X20 U5739 8.8ZN |
| 7 | F01060202 | VITE M8X1,25X25 U5731 4.6ZN | SCR. M8X1,25X25 U5731 4.6ZN | VIS M8X1,25X25 U5731 4.6 | DUEBEL M8X1,25X25 U5731 4.6 ZN | TORNILLO M8X1,25X25 U5731 4.6 |
| 8 | F01410051 | ROS.M8 8,4X 17X1,6 U6592 ZN | WASHER M8 8,4X17X1,6 U6592 ZN | RONDELLE | SCHEIBE | |
| 9 | B00920208 | DADO M8X1 D985 8ZN | NUT M8X1 D985 8ZN | ECROU | SELBSTSICHERNDE MUTTER M8-5S | |
| 10 | F02100065 | SPINA E.P. 4X 30 U6873 C70 BR | PIN EL. 4X30 DIN 1481 | GOUPILLE EL.4 X30 DIN 1481 | SPANNSTIFT 4X30 DIN 1481 | CLAVIJA EL.4 X30 DIN 1481 |

# TAV_160

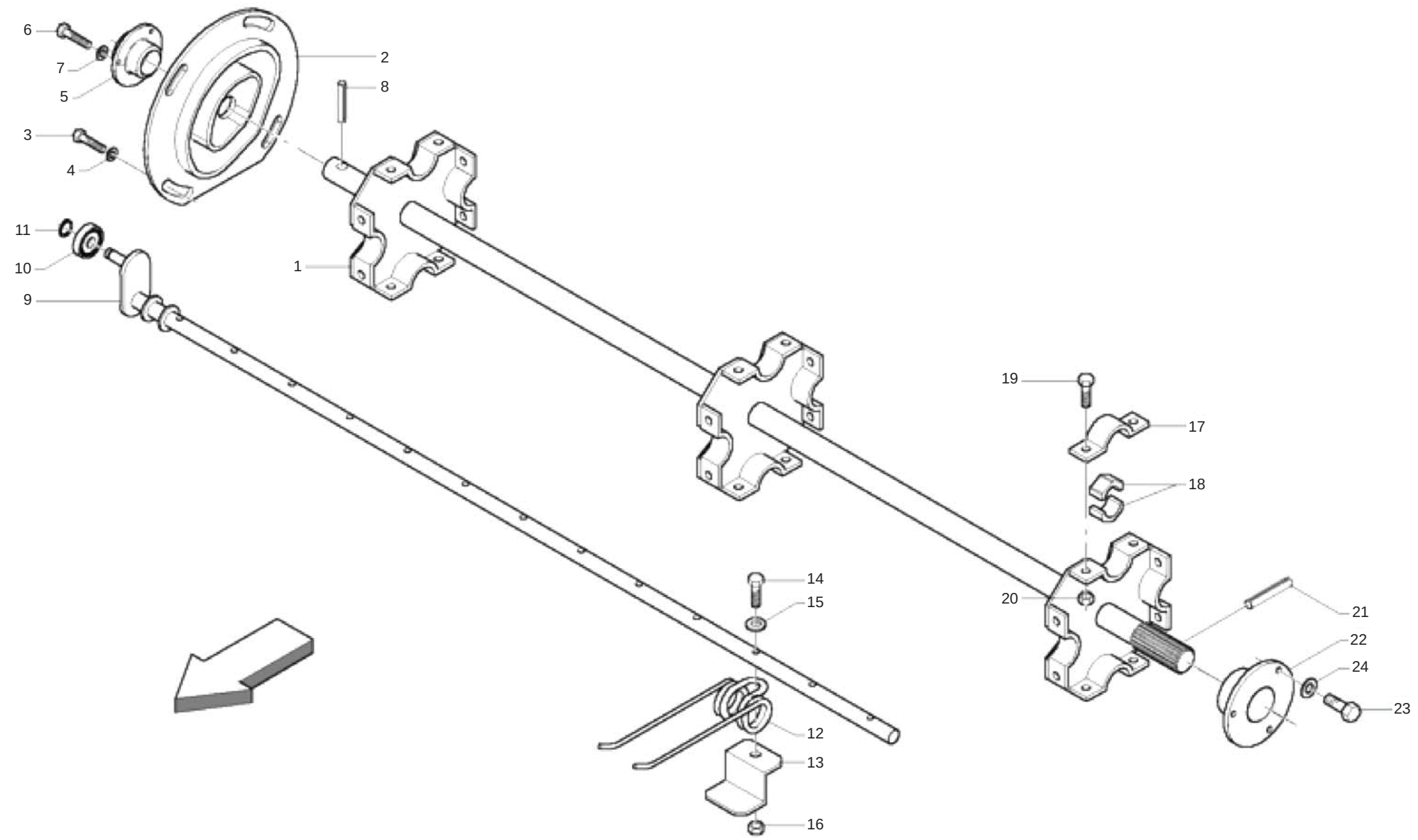




MASCHIO

cod. F07022223

# ASPO PICK-UP M
## *PICK-UP M SHAFT*

TAV_160

| Pos. | Cod. | Descrizione | Description | Description | Benennung | Descripcion |
|---|---|---|---|---|---|---|
| 1 | B07S00993 | CORPO ASPO 200 | PICK-UP SHAFT CASING | CORPS ENROULEUSE 180 | PICK-UP ANTRIEBSWELLENGEHAEUSE | |
| 2 | B057P0203 | CAMMA PICK UP | NEW PICK-UP ECCENTRIC | CAME PU NEW | NEUE PICK-UP EXZENTER NOCKEN | |
| 3 | F01020510 | VITE M12X1,75X30 U5739 8.8ZN | SCR. M12X1,75X30 U5739 8.8ZN | VIS M12X1,75X30 U5739 8.8ZN | SCHRAU.M12X1,75X30 U5739 8.8ZN | TORN. M12X1,75X30 U5739 8.8ZN |
| 4 | B01523831 | RALLA 12 33 5 | FIFTH WHEEL | BUTEE | UMBORDELUNG 12 33 5 | |
| 5 | B02353030 | SUPORTO FLANGIATO TONDO 30LAM. | BEARING FLANGED SUPPORT 30 | SUPPORT FLANGE | FLANSCHLAGER | |
| 6 | F01020470 | VITE M10X1,5X20 U5739 8.8ZN | SCR. M10X1,5X20 U5739 8.8ZN | VIS M10X1,5X20 U5739 8.8 ZN | SCHRAUBE M10X1,5X20 U5739 ZN | TORNILLOM10X1,5X20 U5739 8.8ZN |
| 7 | F01410062 | ROS.M10 10,5X 18X 2 U6592 ZN | WASHER M10 10,5X 18X 2 U6592 | RONDELLE M10 10,5X18X2 ZN | DICHTUNGSRING M10 10,5X18X2 ZN | RONDANA M10 10,5X18X2 ZN |
| 8 | F02100122 | SPINA E.P. 6X 45 U6873 C70 BR | PIN EL. 6 X45 DIN 1481 | FICHE EL. 6 X45 DIN 1481 | SPANNSTIFT 6 X45 DIN 1481 | CLAVIJA EL.6 X45 DIN 1481 |
| 9 | B07S00991 | BARRA PORTADENTI PICK UP 200 | TINE HOLDER BAR | BARRE PORTE-DENTS 180 | ZINKENTRAGERSTANGE | |
| 10 | B020R1210 | ROTEL.SKF 361201 R PICK-UP LEG | ROLLER SKF 361201 R PU BINDER | GALET | LAGER SKF 361201 R | |
| 11 | B01700012 | ANEL. D ARR. ALB. 12-E UNI3653 | SEEGER RING | BAGUE SEEGER | SEEGERRING 12-E | |
| 12 | B018P0003 | DENTE RACCOGLITORE PICK-UP | TOOTH COLLECTING PU | DENT PICK-UP | PICK-UP ZINKEN | |
| 13 | B0C000214 | PIASTRA SOSTEGNO MOLLA | SPRING SUPPORTING PLATE | PLAQUE SUPPORT RESSORT | FEDER STUETZPLATTE | |
| 14 | F01020074 | VITE M8X1,25X50 U5737 10.9ZD | SCR. M8X1,25X50 U5737 10.9ZD | VIS M 8X50 | SCHRAUBE M 8X50 | TORNILLO M 8X50 |
| 15 | F01420048 | ROS.M8 8,4X 24X 2 U6593 ZN | WASHER | RONDELLE | SCHEIBE | |
| 16 | F01230034 | DADO M8X1,25 D982 8ZN | NUT M8X1,25 D982 8ZN | ECROU M8X 1,25 D982 8 ZN | MUTTER M8X 1,25 D982 8 ZN | TUERCA M8X 1,25 D982 8 ZN |
| 17 | B0C001521 | CAVALLOTTO | U BOLT | BOULON | BUEGELBOLZEN | |
| 18 | B025P0010 | SEMIBUSSOLA PER ASPO PICK-UP | HALF-BUSHFOR ASPO PICK-UP | SEMI-PALIER SPECIAL | HALBLAGERBUCHSE | |
| 19 | F01020472 | VITE M10X1,5X25 U5739 8.8ZN | SCR. M10X1,5X25 U5739 8.8ZN | VIS M10X1,5X25 U5739 8.8 ZN | SCHRAUBE M10X1,5X25 U5739 8.8 | TORNILLO 10X25 U5739 8.8 ZN |
| 20 | F01220033 | DADO M10X 1,5 D980 8 ZN | NUT | ECROU | SELBSTSICHERNDE MUTTER M10 KL8 | |
| 21 | F02100122 | SPINA E.P. 6X 45 U6873 C70 BR | PIN EL. 6 X45 DIN 1481 | FICHE EL. 6 X45 DIN 1481 | SPANNSTIFT 6 X45 DIN 1481 | CLAVIJA EL.6 X45 DIN 1481 |
| 22 | B02353030 | SUPORTO FLANGIATO TONDO 30LAM. | BEARING FLANGED SUPPORT 30 | SUPPORT FLANGE | FLANSCHLAGER | |
| 23 | F01020470 | VITE M10X1,5X20 U5739 8.8ZN | SCR. M10X1,5X20 U5739 8.8ZN | VIS M10X1,5X20 U5739 8.8 ZN | SCHRAUBE M10X1,5X20 U5739 ZN | TORNILLOM10X1,5X20 U5739 8.8ZN |
| 24 | F01410062 | ROS.M10 10,5X 18X 2 U6592 ZN | WASHER M10 10,5X 18X 2 U6592 | RONDELLE M10 10,5X18X2 ZN | DICHTUNGSRING M10 10,5X18X2 ZN | RONDANA M10 10,5X18X2 ZN |

TAV_165

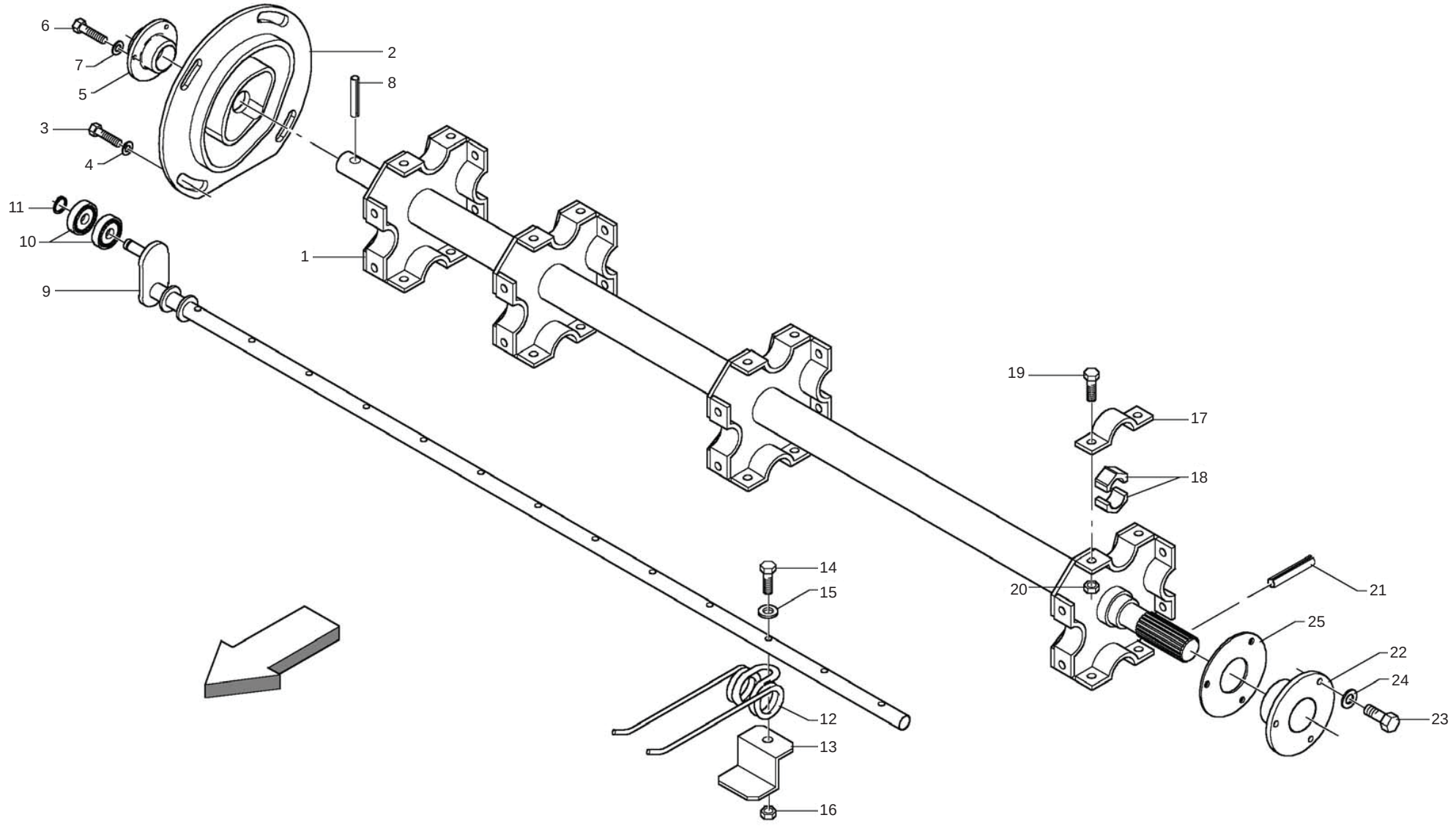

# ASPO PICK-UP L
## *PICK-UP L SHAFT*

TAV_165

| Pos. | Cod. | Descrizione | Description | Description | Benennung | Descripcion |
|---|---|---|---|---|---|---|
| 01 | B07S01223 | CORPO ASPO 220 | PICK-UP SHAFT CASING 220 | CORPS ENROULEUR 220 | PICK-UP ANTRIEBSWELLENGEHAEUSE | |
| 02 | B057P0203 | CAMMA PICK UP | NEW PICK-UP ECCENTRIC | CAME PU NEW | NEUE PICK-UP EXZENTER NOCKEN | |
| 03 | F01020510 | VITE M12X1,75X30 U5739 8.8ZN | SCR. M12X1,75X30 U5739 8.8ZN | VIS M12X1,75X30 U5739 8.8ZN | SCHRAU.M12X1,75X30 U5739 8.8ZN | TORN. M12X1,75X30 U5739 8.8ZN |
| 04 | B01523831 | RALLA 12 33 5 | FIFTH WHEEL | BUTEE | UMBORDELUNG 12 33 5 | |
| 05 | B02353030 | SUPORTO FLANGIATO TONDO 30LAM. | BEARING FLANGED SUPPORT 30 | SUPPORT FLANGE | FLANSCHLAGER | |
| 06 | F01020470 | VITE M10X1,5X20 U5739 8.8ZN | SCR. M10X1,5X20 U5739 8.8ZN | VIS M10X1,5X20 U5739 8.8 ZN | SCHRAUBE M10X1,5X20 U5739 ZN | TORNILLOM10X1,5X20 U5739 8.8ZN |
| 07 | F01410062 | ROS.M10 10,5X 18X 2 U6592 ZN | WASHER M10 10,5X 18X 2 U6592 | RONDELLE M10 10,5X18X2 ZN | DICHTUNGSRING M10 10,5X18X2 ZN | RONDANA M10 10,5X18X2 ZN |
| 08 | F02100123 | SPINA E.P. 6X 45 U6873 C70 ZN | ELASTIC PIN 6X45 | GOUJON ELSTIQUE 6X45 | SPANNHUELSE 6X45 | ESPINA ELASTICA 6X45 |
| 09 | B07SP1050 | BARRA P.DENTI PU 220 TEMPRATA | PICK-UP BAR HARDENED 200 | | | |
| 10 | B020R1210 | ROTEL.SKF 361201 R PICK-UP LEG | ROLLER SKF 361201 R PU BINDER | GALET | LAGER SKF 361201 R | |
| 11 | B01700012 | ANEL. D ARR. ALB. 12-E UNI3653 | SEEGER RING | BAGUE SEEGER | SEEGERRING 12-E | |
| 12 | B018P0003 | DENTE RACCOGLITORE PICK-UP | TOOTH COLLECTING PU | DENT PICK-UP | PICK-UP ZINKEN | |
| 13 | B0C000214 | PIASTRA SOSTEGNO MOLLA | SPRING SUPPORTING PLATE | PLAQUE SUPPORT RESSORT | FEDER STUETZPLATTE | |
| 14 | F01020074 | VITE M8X1,25X50 U5737 10.9ZD | SCR. M8X1,25X50 U5737 10.9ZD | VIS M 8X50 | SCHRAUBE M 8X50 | TORNILLO M 8X50 |
| 15 | F01420048 | ROS.M8 8,4X 24X 2 U6593 ZN | WASHER | RONDELLE | SCHEIBE | |
| 16 | F01230293 | DADO M8X1,25 U7473 8ZN | NUT M8X1,25 U7473 8ZN | | | |
| 17 | B0C001521 | CAVALLOTTO | U BOLT | BOULON | BUEGELBOLZEN | |
| 18 | B025P0010 | SEMIBUSSOLA PER ASPO PICK-UP | HALF-BUSHFOR ASPO PICK-UP | SEMI-PALIER SPECIAL | HALBLAGERBUCHSE | |
| 19 | F01020472 | VITE M10X1,5X25 U5739 8.8ZN | SCR. M10X1,5X25 U5739 8.8ZN | VIS M10X1,5X25 U5739 8.8 ZN | SCHRAUBE M10X1,5X25 U5739 8.8 | TORNILLO 10X25 U5739 8.8 ZN |
| 20 | F01220033 | DADO M10X 1,5 D980 8 ZN | NUT | ECROU | SELBSTSICHERNDE MUTTER M10 KL8 | |
| 21 | F02100124 | SPINA E.P. 3X 12 U6873 C70 BR | PIN EL. 6X50 U6873 C70 BR | GOUJON 6X50 U6873 C70 BR | STIFT 6X50 U6873 C70 BR | ESPINA 6X50 U6873 C70 BR |
| 22 | B02353035 | SUPPORTO FLANG.TONDO 35 LAMIER | BEARING FLANGED SUPPORT D.35 | SUPPORT FLANGE | FLANSCHLAGER | |
| 23 | F01020470 | VITE M10X1,5X20 U5739 8.8ZN | SCR. M10X1,5X20 U5739 8.8ZN | VIS M10X1,5X20 U5739 8.8 ZN | SCHRAUBE M10X1,5X20 U5739 ZN | TORNILLOM10X1,5X20 U5739 8.8ZN |
| 24 | F01410062 | ROS.M10 10,5X 18X 2 U6592 ZN | WASHER M10 10,5X 18X 2 U6592 | RONDELLE M10 10,5X18X2 ZN | DICHTUNGSRING M10 10,5X18X2 ZN | RONDANA M10 10,5X18X2 ZN |
| 25 | B01301126 | SPES. | SHIM | ENTRETOISE | DICHTUNG | |

# TAV_170

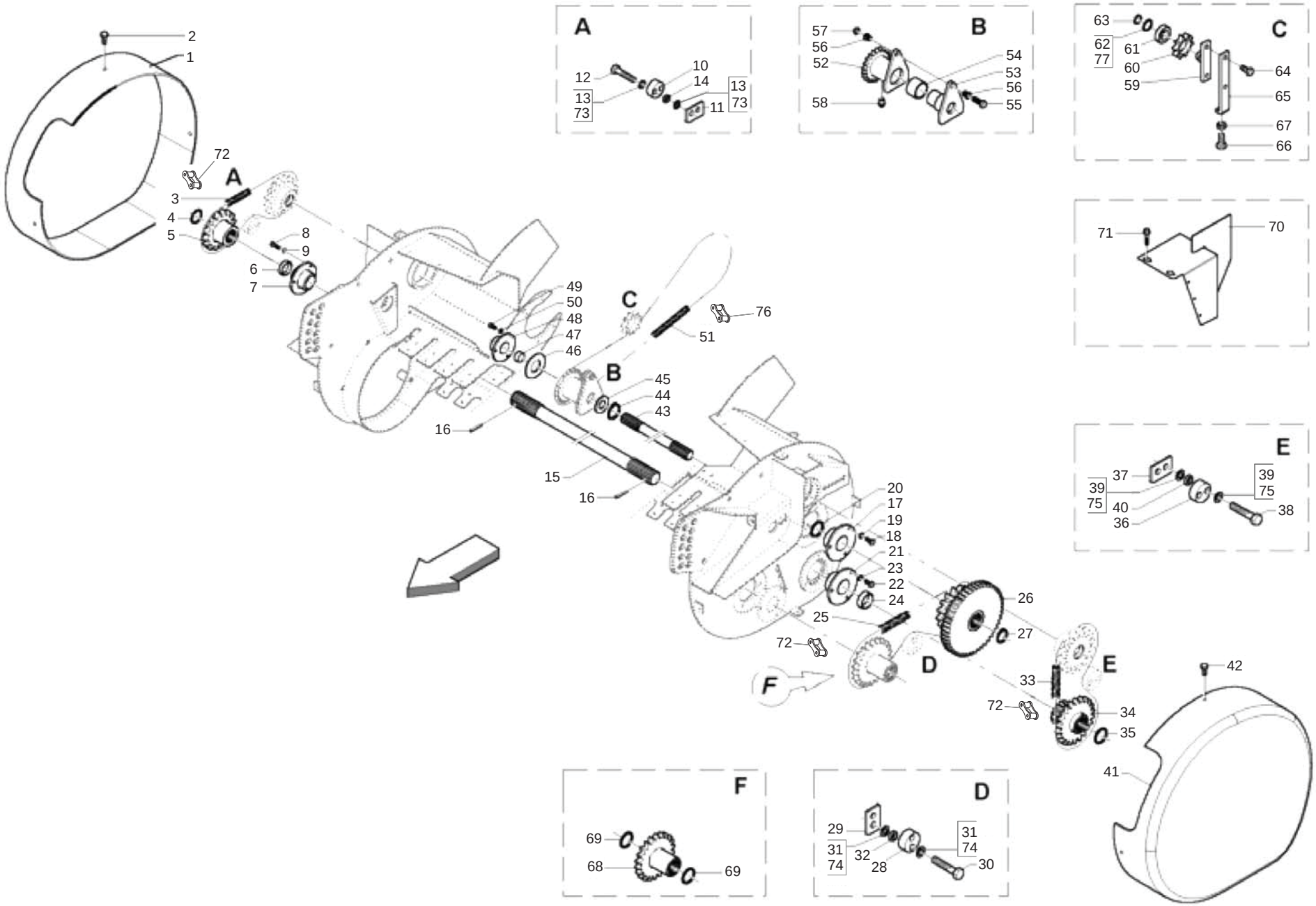




MASCHIO

cod. F07022223

# TRASMISSIONE PICK-UP M
## *PICK-UP M TRANSMISSION*

TAV_170

| Pos. | Cod. | Descrizione | Description | Description | Benennung | Descripcion |
|---|---|---|---|---|---|---|
| 01 | B07SP0001G | CARTER DX PU | PU RIGHT GUARD | | | |
| 02 | F01020436 | VITE M8X1,25X20 U5739 8.8ZN | SCR. M8X1,25X20 U5739 8.8ZN | VIS M8X1,25X 20 U5739 8.8 ZN | SCHRAUBE M8X1,25X20U5739 8.8ZN | TORN. M8X1,25X20 U5739 8.8 ZN |
| 03 | B03111057 | CATENA RULLI ASA 60-1 57 MGL | ROLLER CHAIN | CHAINE ROULEAUX | KETTE ASA 60-1 57MGL ISO1 | |
| 04 | B01534416 | SPES. 35 43 1 ZINCATO | SHIM | ENTRETOISE | AUSGLEICHSCHEIBE 35X43X1 | |
| 05 | B03400003 | INGR. Z=22; 3 4; ISO 12B-1 PU | GEAR Z=22-3 4 | ENGRANAGE | KETTENRAD Z=22-3 4 | |
| 06 | B01330957 | DISTANZIALE 35-48-7 | SPACER | ENTRETOISE | DISTANZSTUECK 35X48X7 | |
| 07 | B02353035 | SUPPORTO FLANG.TONDO 35 LAMIER | BEARING FLANGED SUPPORT D.35 | SUPPORT FLANGE | FLANSCHLAGER | |
| 08 | F01020472 | VITE M10X1,5X25 U5739 8.8ZN | SCR. M10X1,5X25 U5739 8.8ZN | VIS M10X1,5X25 U5739 8.8 ZN | SCHRAUBE M10X1,5X25 U5739 8.8 | TORNILLO 10X25 U5739 8.8 ZN |
| 09 | F01410062 | ROS.M10 10,5X 18X 2 U6592 ZN | WASHER M10 10,5X 18X 2 U6592 | RONDELLE M10 10,5X18X2 ZN | DICHTUNGSRING M10 10,5X18X2 ZN | RONDANA M10 10,5X18X2 ZN |
| 10 | B07VP0513 | TENDICATENA IN NYLON | NYLON CHAIN TIGHTENER | | | |
| 11 | BC003172L | ATTACCO TENDICATENA | CHAIN TIGHTENER COUPLING | | | |
| 12 | F01020164 | VITE M12X1,75X70 U5737 8.8ZN | SCREW M12X1,75X70 U5737 8.8ZN | VIS M12X1,75X70 U5737 8.8 ZN | SCHR. M12X1,75X70 U5737 8.8 ZN | TORN. M12X1,75X70 U5737 8.8 ZN |
| 13 | F01410076 | ROS.M12 13X 20X2,0 U1749 ZN | WASHER | RONDELLE | SCHEIBE | |
| 14 | B01523831 | RALLA 12 33 5 | FIFTH WHEEL | BUTEE | UMBORDELUNG 12 33 5 | |
| 15 | B03A34361 | CONTRALBERO LUNGO PU 200 | COUNTERSHAFT | CONTRE ARBRE | VORGELEGEWELLE 200 | |
| 16 | F02100124 | SPINA E.P. 3X 12 U6873 C70 BR | PIN EL. 6X50 U6873 C70 BR | GOUJON 6X50 U6873 C70 BR | STIFT 6X50 U6873 C70 BR | ESPINA 6X50 U6873 C70 BR |
| 17 | B02353035 | SUPPORTO FLANG.TONDO 35 LAMIER | BEARING FLANGED SUPPORT D.35 | SUPPORT FLANGE | FLANSCHLAGER | |
| 18 | F01020470 | VITE M10X1,5X20 U5739 8.8ZN | SCR. M10X1,5X20 U5739 8.8ZN | VIS M10X1,5X20 U5739 8.8 ZN | SCHRAUBE M10X1,5X20 U5739 ZN | TORNILLOM10X1,5X20 U5739 8.8ZN |
| 19 | F01410062 | ROS.M10 10,5X 18X 2 U6592 ZN | WASHER M10 10,5X 18X 2 U6592 | RONDELLE M10 10,5X18X2 ZN | DICHTUNGSRING M10 10,5X18X2 ZN | RONDANA M10 10,5X18X2 ZN |
| 20 | B01534416 | SPES. 35 43 1 ZINCATO | SHIM | ENTRETOISE | AUSGLEICHSCHEIBE 35X43X1 | |
| 21 | B02353035 | SUPPORTO FLANG.TONDO 35 LAMIER | BEARING FLANGED SUPPORT D.35 | SUPPORT FLANGE | FLANSCHLAGER | |
| 22 | F01020472 | VITE M10X1,5X25 U5739 8.8ZN | SCR. M10X1,5X25 U5739 8.8ZN | VIS M10X1,5X25 U5739 8.8 ZN | SCHRAUBE M10X1,5X25 U5739 8.8 | TORNILLO 10X25 U5739 8.8 ZN |
| 23 | F01410062 | ROS.M10 10,5X 18X 2 U6592 ZN | WASHER M10 10,5X 18X 2 U6592 | RONDELLE M10 10,5X18X2 ZN | DICHTUNGSRING M10 10,5X18X2 ZN | RONDANA M10 10,5X18X2 ZN |
| 24 | B01330957 | DISTANZIALE 35-48-7 | SPACER | ENTRETOISE | DISTANZSTUECK 35X48X7 | |
| 25 | B03111046 | CATENA RULLI ASA 60-1 46 MGL | ROLLER CHAIN ASA60-1 46 MGL | CHAINE ROULEAUX | KETTE DER WALZEN | |
| 26 | B03L34402 | INGR. DOPPIO Z=17 48 CON MOZZO | GEAR | ENGRANAGE | ZAHNRADPAAR Z=17 48 | |
| 27 | B01700035 | ANEL. D ARR. ALB. 35-E UNI3653 | SEEGER RING | BAGUE SEEGER | SEEGERRING 35-E | |
| 28 | B07VP0513 | TENDICATENA IN NYLON | NYLON CHAIN TIGHTENER | | | |
| 29 | BC003172L | ATTACCO TENDICATENA | CHAIN TIGHTENER COUPLING | | | |
| 30 | F01020160 | VITE M12X1,75X60 U5737 8.8ZN | SCR. M12X1,75X60 U5737 8.8ZN | VIS M12X1,75X60 U5737 8.8 ZN | SCHRA.M12X1,75X60 U5737 8.8 ZN | TORN. M12X1,75X60 U5737 8.8 ZN |
| 31 | F01420120 | ROS.M12 13X 36X2,5 U6593 ZN | WASHER | RONDELLE | SCHEIBE | |
| 32 | B01523831 | RALLA 12 33 5 | FIFTH WHEEL | BUTEE | UMBORDELUNG 12 33 5 | |
| 33 | B03111057 | CATENA RULLI ASA 60-1 57 MGL | ROLLER CHAIN | CHAINE ROULEAUX | KETTE ASA 60-1 57MGL ISO1 | |
| 34 | B03400271 | INGR.DOPPIO Z=16 22 CON MOZZO | DOUBLE GEAR Z=16 22 WITH HUB | ENGRANAGE | ZAHNRADPAAR | |
| 35 | B01534416 | SPES. 35 43 1 ZINCATO | SHIM | ENTRETOISE | AUSGLEICHSCHEIBE 35X43X1 | |
| 36 | B07VP0513 | TENDICATENA IN NYLON | NYLON CHAIN TIGHTENER | | | |
| 37 | BC003172L | ATTACCO TENDICATENA | CHAIN TIGHTENER COUPLING | | | |
| 38 | F01020164 | VITE M12X1,75X70 U5737 8.8ZN | SCREW M12X1,75X70 U5737 8.8ZN | VIS M12X1,75X70 U5737 8.8 ZN | SCHR. M12X1,75X70 U5737 8.8 ZN | TORN. M12X1,75X70 U5737 8.8 ZN |
| 39 | F01410076 | ROS.M12 13X 20X2,0 U1749 ZN | WASHER | RONDELLE | SCHEIBE | |
| 40 | B01523831 | RALLA 12 33 5 | FIFTH WHEEL | BUTEE | UMBORDELUNG 12 33 5 | |
| 41 | B07SP0002 | CARTER SX PU | PU LEFT GUARD | CARTER GAUCHE PU | CARTER LINKS PU | |
| 42 | F01020436 | VITE M8X1,25X20 U5739 8.8ZN | SCR. M8X1,25X20 U5739 8.8ZN | VIS M8X1,25X 20 U5739 8.8 ZN | SCHRAUBE M8X1,25X20U5739 8.8ZN | TORN. M8X1,25X20 U5739 8.8 ZN |
| 43 | B03500279 | CONTRALBERO CORTO PU 200 | SHORT COUNTERSHAFT 200 | CONTRE ARBRE COURT PU 200 | KURZE VORGELEGEWELLE 200 | |
| 44 | B01700040 | ANEL. D ARR. ALBERO 40-E UNI 3 | SEEGER RING | BAGUE SEEGER | SEEGERRING 40-E | |
| 45 | B01300126 | SPES. 40 48 1 ZINC.ST_013 | SHIM | ENTRETOISE | DISTANZSTUECK 40 408 1 | |
| 46 | B01534395 | RALLA 35.5X 62 X 3 ZINCATO | FIFTH WHEEL | BUTEE | SPEZIALSCHEIBE | |
| 47 | B01300607 | DISTANZIALE 35X42X35 | SPACER | ENTRETOISE | DISTANZSTUECK 35X42X35 | |
| 48 | B02353035 | SUPPORTO FLANG.TONDO 35 LAMIER | BEARING FLANGED SUPPORT D.35 | SUPPORT FLANGE | FLANSCHLAGER | |
| 49 | F01020470 | VITE M10X1,5X20 U5739 8.8ZN | SCR. M10X1,5X20 U5739 8.8ZN | VIS M10X1,5X20 U5739 8.8 ZN | SCHRAUBE M10X1,5X20 U5739 ZN | TORNILLOM10X1,5X20 U5739 8.8ZN |
| 50 | F01410062 | ROS.M10 10,5X 18X 2 U6592 ZN | WASHER M10 10,5X 18X 2 U6592 | RONDELLE M10 10,5X18X2 ZN | DICHTUNGSRING M10 10,5X18X2 ZN | RONDANA M10 10,5X18X2 ZN |
| 51 | B030E1027 | CATENA RULLI ISO 16 B-1 27M | ROLLER CHAIN ISO16 B-1 27M | CHAINE ROULEAUX | WALZENKETTE | |
| 52 | B03400241 | MOZZO DI SICUREZZA PICK-UP | SURETY HUB | MOYEU DE SURETE | SICHERHEIT NABE | |
| 53 | B07S01001 | MOZZO CALETTATO | SPLINED HUB | MOYEU | VERZAHNTE NABE | |
| 54 | B02500001 | BRONZINA SICUREZZA PICK-UP | BUSHING | COUSSINET | LAGERBUCHSE | |
| 55 | B00170845 | VITE ZINCATA M 8X45-10.9 U5737 | ZN SCREW M 8X45-10.9 U5737 | VIS | SCHRAUBE | |
| 56 | B00511057 | BUSSOLA DI TRANCIAMENTO INFALD | BUSHING | BAGUE | BUCHSE | |
| 57 | B008B0208 | DADO M 8X1,25 D980 8 ZN | NUT | ECROU | SELBSTSICHERNDE MUTTER M8 KL8 | |

# TAV_170

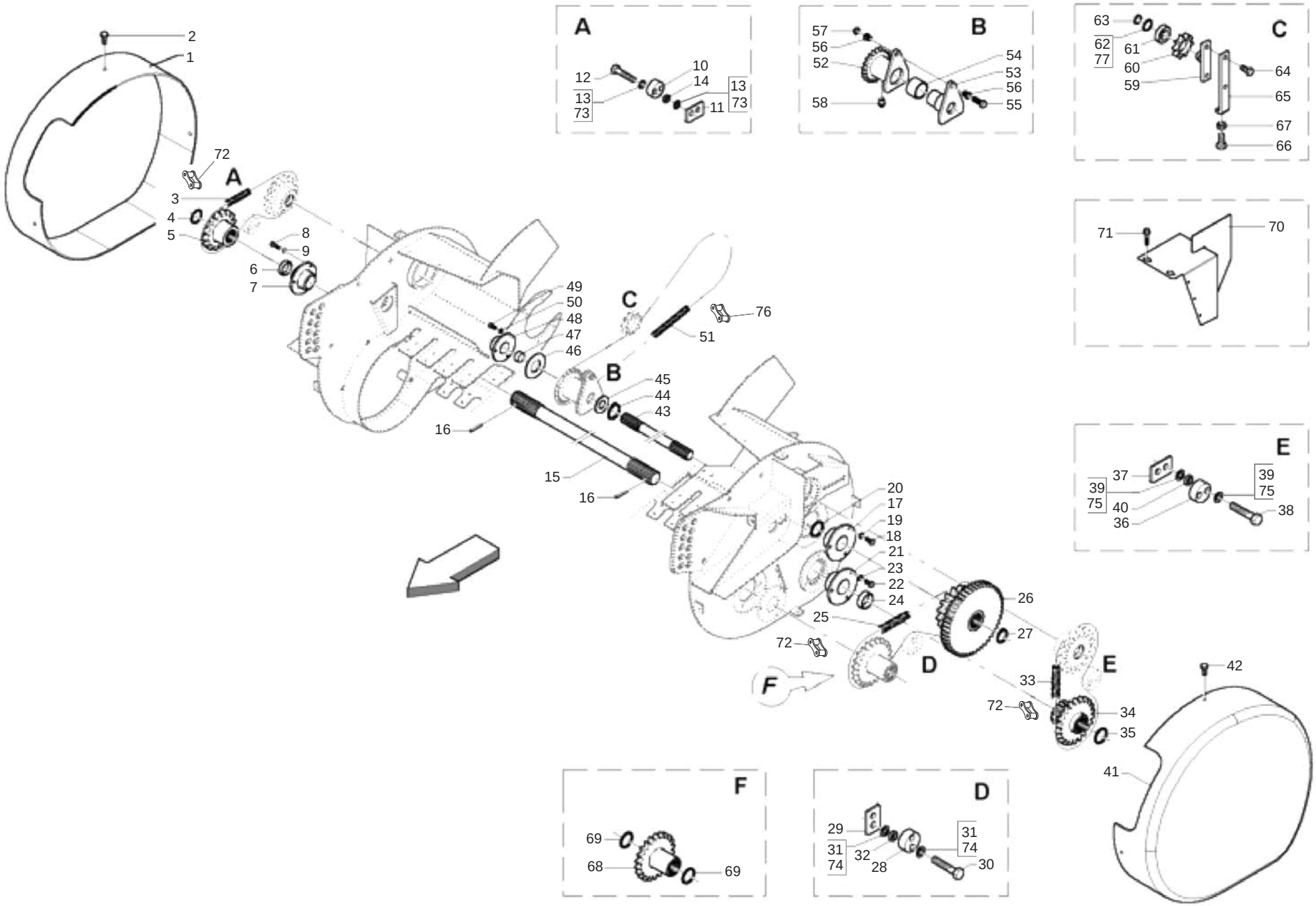




MASCHIO

cod. F07022223

# TRASMISSIONE PICK-UP M
## *PICK-UP M TRANSMISSION*

| Pos. | Cod. | Descrizione | Description | Description | Benennung | Descripcion |
|---|---|---|---|---|---|---|
| 58 | B04200610 | INGRASS.A SFERE M6X1 LUNGO | GREASE NIPPLE | GRAISSEUR HYDRAULIQUE | GERADER SCHMIERNIPPEL M6X1 | |
| 59 | B07S01013 | TENDITORE PU | PICK-UP TENSIONER | TENDEUR PU | PICK-UP SPANNER | |
| 60 | B03400274 | CORONA Z10-1 ISO F52 TRATT | SPROCKET Z=10-1 | ENGRANAGE SPECIAL TRAITE | ZAHNKRANZ Z=10-1 | |
| 61 | B02042515 | CUSC 6205-2RS CAT.A-ST004 | BEARING | ROULEMENT | LAGER 6205-2RS | |
| 62 | B01300104 | SPES. 25,5 37 0,2 | SHIM | ENTRETOISE | BEILAGSCHEIBE 25,5 37 0,2 | |
| 63 | F02050101 | ANEL. D ARR. ALB. 25-E UNI3653 | SEEGER RING | BAGUE SEEGER | SEEGERRING 25-E | |
| 64 | F01020510 | VITE M12X1,75X30 U5739 8.8ZN | SCR. M12X1,75X30 U5739 8.8ZN | VIS M12X1,75X30 U5739 8.8ZN | SCHRAU.M12X1,75X30 U5739 8.8ZN | TORN. M12X1,75X30 U5739 8.8ZN |
| 65 | B0C6P0065 | TIRANTE INFALDATORE | FEEDER TIE ROD | TIRANT AMENEUR | ZUGSTAB RAFFER | |
| 66 | F01020519 | VITE M12X1,75X 60 U5739 8.8ZN | SCREW M12X1,75X 60 U5739 8.8ZN | | | |
| 67 | F01200293 | DADO M12X1,75 U5588 CL8 ZN | NUT M12X1,75 U5588 6S ZN | ECROU M12X1,75 U5588 6S ZN | MUTTER M12X1,75 U5588 6S ZN | TUERCA M12X1,75 U5588 6S ZN |
| 68 | B03400240 | INGR. Z=22-3 4 ISO CON MOZZO | GEAR Z=22-3 4 ISO WITH HUB | ENGRENAGE | ZAHNRAD Z=22-3 4 ISO MIT NAB | |
| 69 | B01300101 | SPES. 30,3 40 1 ZINCATO | SHIM GALV | ENTRETOISE GALV | DISTANZSTUECK 30,3 40 1 | |
| 70 | B0C005269 | CARTER SICUREZZA NEW | NEW SAFETY GUARD | CARTER DE SURETE NEW | CARTER SICHERHEITS NEW | |
| 71 | B00370001 | VITE TE M 8X16 A SEZ.TRILOBATA | SCREW TRE M 8X16 SEZ TROUBLED | VIS | SCHRAUBE M 8X15 | |
| 72 | B03110007 | GIUNTO MOLL. N. 26 ASA 60-1 | SPRING JOINT N. 26 ASA 60-1 | JOINT | KETTENSCHLOSS | |
| 73 | F01420120 | ROS.M12 13X 36X2,5 U6593 ZN | WASHER | RONDELLE | SCHEIBE | |
| 74 | F01410076 | ROS.M12 13X 20X2,0 U1749 ZN | WASHER | RONDELLE | SCHEIBE | |
| 75 | F01420120 | ROS.M12 13X 36X2,5 U6593 ZN | WASHER | RONDELLE | SCHEIBE | |
| 76 | B030E0017 | GIUNTO MOLL N26 ISO 16 B-1 | SPRING JOINT N.26 ISO 16 B-1 | JOINT RESSORT | KETTENFEDER | |
| 77 | B01300104 | SPES. 25,5 37 0,2 | SHIM | ENTRETOISE | BEILAGSCHEIBE 25,5 37 0,2 | |

# TAV_175

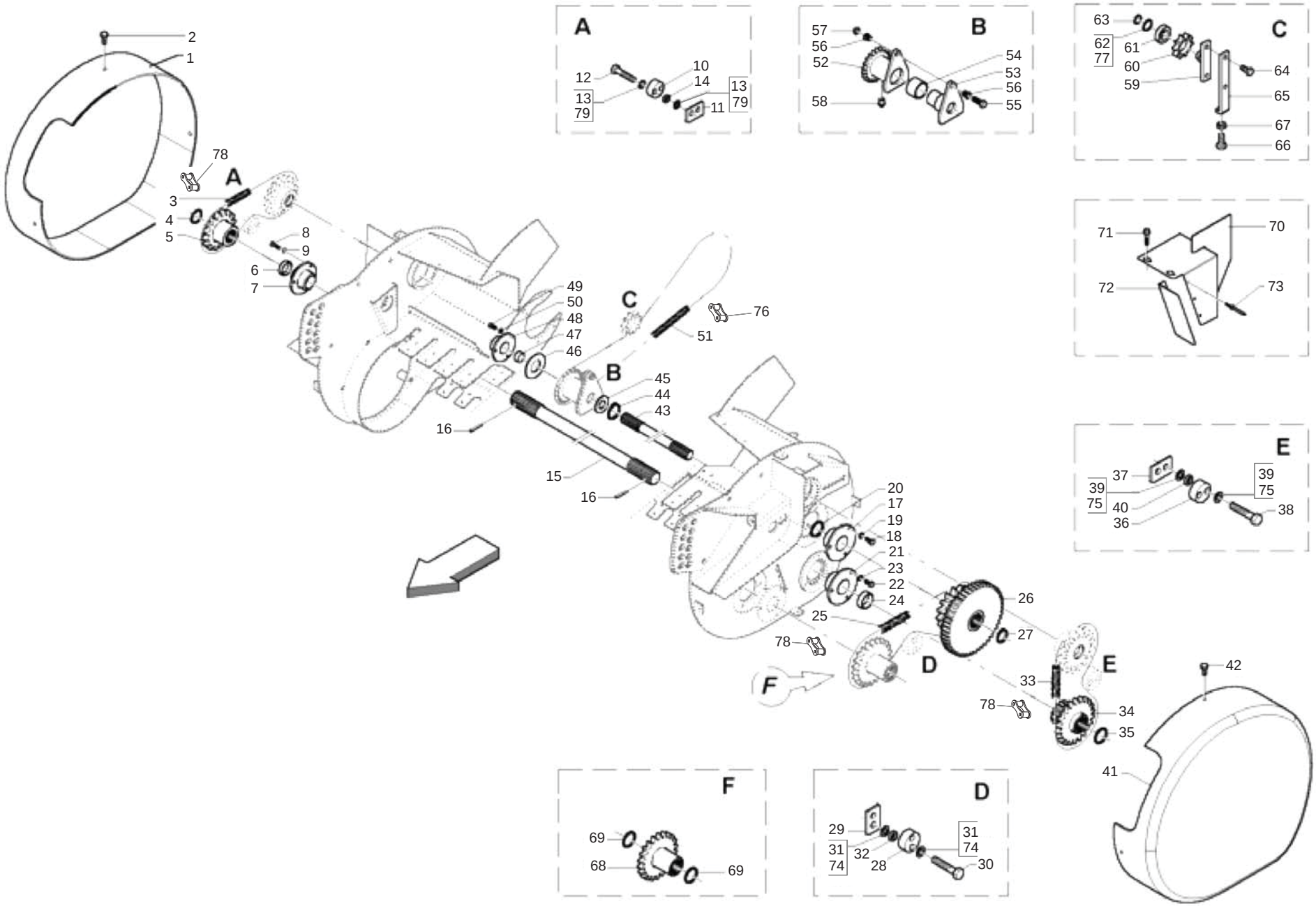




MASCHIO

cod. F07022223

# TRASMISSIONE PICK-UP L
# PICK-UP L TRANSMISSION

TAV_175

| Pos. | Cod. | Descrizione | Description | Description | Benennung | Descripcion |
|---|---|---|---|---|---|---|
| 1 | B07SP0001G | CARTER DX PU | PU RIGHT GUARD | | | |
| 2 | F01020436 | VITE M8X1,25X20 U5739 8.8ZN | SCR. M8X1,25X20 U5739 8.8ZN | VIS M8X1,25X 20 U5739 8.8 ZN | SCHRAUBE M8X1,25X20U5739 8.8ZN | TORN. M8X1,25X20 U5739 8.8 ZN |
| 3 | B03111057 | CATENA RULLI ASA 60-1 57 MGL | ROLLER CHAIN | CHAINE ROULEAUX | KETTE ASA 60-1 57MGL ISO1 | |
| 4 | B01534416 | SPES. 35 43 1 ZINCATO | SHIM | ENTRETOISE | AUSGLEICHSCHEIBE 35X43X1 | |
| 5 | B03400003 | INGR. Z=22; 3 4; ISO 12B-1 PU | GEAR Z=22-3 4 | ENGRANAGE | KETTENRAD Z=22-3 4 | |
| 6 | B01330957 | DISTANZIALE 35-48-7 | SPACER | ENTRETOISE | DISTANZSTUECK 35X48X7 | |
| 7 | B02353035 | SUPPORTO FLANG.TONDO 35 LAMIER | BEARING FLANGED SUPPORT D.35 | SUPPORT FLANGE | FLANSCHLAGER | |
| 8 | F01020472 | VITE M10X1,5X25 U5739 8.8ZN | SCR. M10X1,5X25 U5739 8.8ZN | VIS M10X1,5X25 U5739 8.8 ZN | SCHRAUBE M10X1,5X25 U5739 8.8 | TORNILLO 10X25 U5739 8.8 ZN |
| 9 | F01410062 | ROS.M10 10,5X 18X 2 U6592 ZN | WASHER M10 10,5X 18X 2 U6592 | RONDELLE M10 10,5X18X2 ZN | DICHTUNGSRING M10 10,5X18X2 ZN | RONDANA M10 10,5X18X2 ZN |
| 10 | B07VP0513 | TENDICATENA IN NYLON | NYLON CHAIN TIGHTENER | | | |
| 11 | BC003172L | ATTACCO TENDICATENA | CHAIN TIGHTENER COUPLING | | | |
| 12 | F01020164 | VITE M12X1,75X70 U5737 8.8ZN | SCREW M12X1,75X70 U5737 8.8ZN | VIS M12X1,75X70 U5737 8.8 ZN | SCHR. M12X1,75X70 U5737 8.8 ZN | TORN. M12X1,75X70 U5737 8.8 ZN |
| 13 | F01420120 | ROS.M12 13X 36X2,5 U6593 ZN | WASHER | RONDELLE | SCHEIBE | |
| 14 | B01523831 | RALLA 12 33 5 | FIFTH WHEEL | BUTEE | UMBORDELUNG 12 33 5 | |
| 15 | B03500045 | CONTRALBERO LUNGO PU 220 | COUNTERSHAFT 220 | CONTRE-ARBRE 200 | VORGELEGEWELLE | |
| 16 | F02100124 | SPINA E.P. 3X 12 U6873 C70 BR | PIN EL. 6X50 U6873 C70 BR | GOUJON 6X50 U6873 C70 BR | STIFT 6X50 U6873 C70 BR | ESPINA 6X50 U6873 C70 BR |
| 17 | B02353035 | SUPPORTO FLANG.TONDO 35 LAMIER | BEARING FLANGED SUPPORT D.35 | SUPPORT FLANGE | FLANSCHLAGER | |
| 18 | F01020470 | VITE M10X1,5X20 U5739 8.8ZN | SCR. M10X1,5X20 U5739 8.8ZN | VIS M10X1,5X20 U5739 8.8 ZN | SCHRAUBE M10X1,5X20 U5739 ZN | TORNILLOM10X1,5X20 U5739 8.8ZN |
| 19 | F01410062 | ROS.M10 10,5X 18X 2 U6592 ZN | WASHER M10 10,5X 18X 2 U6592 | RONDELLE M10 10,5X18X2 ZN | DICHTUNGSRING M10 10,5X18X2 ZN | RONDANA M10 10,5X18X2 ZN |
| 20 | B01534416 | SPES. 35 43 1 ZINCATO | SHIM | ENTRETOISE | AUSGLEICHSCHEIBE 35X43X1 | |
| 21 | B02353035 | SUPPORTO FLANG.TONDO 35 LAMIER | BEARING FLANGED SUPPORT D.35 | SUPPORT FLANGE | FLANSCHLAGER | |
| 22 | F01020472 | VITE M10X1,5X25 U5739 8.8ZN | SCR. M10X1,5X25 U5739 8.8ZN | VIS M10X1,5X25 U5739 8.8 ZN | SCHRAUBE M10X1,5X25 U5739 8.8 | TORNILLO 10X25 U5739 8.8 ZN |
| 23 | F01410062 | ROS.M10 10,5X 18X 2 U6592 ZN | WASHER M10 10,5X 18X 2 U6592 | RONDELLE M10 10,5X18X2 ZN | DICHTUNGSRING M10 10,5X18X2 ZN | RONDANA M10 10,5X18X2 ZN |
| 24 | B01330957 | DISTANZIALE 35-48-7 | SPACER | ENTRETOISE | DISTANZSTUECK 35X48X7 | |
| 25 | B03111046 | CATENA RULLI ASA 60-1 46 MGL | ROLLER CHAIN ASA60-1 46 MGL | CHAINE ROULEAUX | KETTE DER WALZEN | |
| 26 | B03L34402 | INGR. DOPPIO Z=17 48 CON MOZZO | GEAR | ENGRANAGE | ZAHNRADPAAR Z=17 48 | |
| 27 | B01700035 | ANEL. D ARR. ALB. 35-E UNI3653 | SEEGER RING | BAGUE SEEGER | SEEGERRING 35-E | |
| 28 | B07VP0513 | TENDICATENA IN NYLON | NYLON CHAIN TIGHTENER | | | |
| 29 | BC003172L | ATTACCO TENDICATENA | CHAIN TIGHTENER COUPLING | | | |
| 30 | F01020160 | VITE M12X1,75X60 U5737 8.8ZN | SCR. M12X1,75X60 U5737 8.8ZN | VIS M12X1,75X60 U5737 8.8 ZN | SCHRA.M12X1,75X60 U5737 8.8 ZN | TORN. M12X1,75X60 U5737 8.8 ZN |
| 31 | F01410076 | ROS.M12 13X 20X2,0 U1749 ZN | WASHER | RONDELLE | SCHEIBE | |
| 32 | B01523831 | RALLA 12 33 5 | FIFTH WHEEL | BUTEE | UMBORDELUNG 12 33 5 | |
| 33 | B03111057 | CATENA RULLI ASA 60-1 57 MGL | ROLLER CHAIN | CHAINE ROULEAUX | KETTE ASA 60-1 57MGL ISO1 | |
| 34 | B03400271 | INGR.DOPPIO Z=16 22 CON MOZZO | DOUBLE GEAR Z=16 22 WITH HUB | ENGRANAGE | ZAHNRADPAAR | |
| 35 | B01534416 | SPES. 35 43 1 ZINCATO | SHIM | ENTRETOISE | AUSGLEICHSCHEIBE 35X43X1 | |
| 36 | B07VP0513 | TENDICATENA IN NYLON | NYLON CHAIN TIGHTENER | | | |
| 37 | BC003172L | ATTACCO TENDICATENA | CHAIN TIGHTENER COUPLING | | | |
| 38 | F01020164 | VITE M12X1,75X70 U5737 8.8ZN | SCREW M12X1,75X70 U5737 8.8ZN | VIS M12X1,75X70 U5737 8.8 ZN | SCHR. M12X1,75X70 U5737 8.8 ZN | TORN. M12X1,75X70 U5737 8.8 ZN |
| 39 | F01420120 | ROS.M12 13X 36X2,5 U6593 ZN | WASHER | RONDELLE | SCHEIBE | |
| 40 | B01523831 | RALLA 12 33 5 | FIFTH WHEEL | BUTEE | UMBORDELUNG 12 33 5 | |
| 41 | B07SP0002 | CARTER SX PU | PU LEFT GUARD | CARTER GAUCHE PU | CARTER LINKS PU | |
| 42 | F01020436 | VITE M8X1,25X20 U5739 8.8ZN | SCR. M8X1,25X20 U5739 8.8ZN | VIS M8X1,25X 20 U5739 8.8 ZN | SCHRAUBE M8X1,25X20U5739 8.8ZN | TORN. M8X1,25X20 U5739 8.8 ZN |
| 43 | B03500280 | CONTRALBERO CORTO PU 220 | SHORT COUNTER SHAFT 220 | CONTRE ARBRE COURT PU 220 | KURZE VORGELEGEWELLE 220 | |
| 44 | B01700040 | ANEL. D ARR. ALBERO 40-E UNI 3 | SEEGER RING | BAGUE SEEGER | SEEGERRING 40-E | |
| 45 | B01300126 | SPES. 40 48 1 ZINC.ST_013 | SHIM | ENTRETOISE | DISTANZSTUECK 40 408 1 | |
| 46 | B01534395 | RALLA 35.5X 62 X 3 ZINCATO | FIFTH WHEEL | BUTEE | SPEZIALSCHEIBE | |
| 47 | B01300607 | DISTANZIALE 35X42X35 | SPACER | ENTRETOISE | DISTANZSTUECK 35X42X35 | |
| 48 | B02353035 | SUPPORTO FLANG.TONDO 35 LAMIER | BEARING FLANGED SUPPORT D.35 | SUPPORT FLANGE | FLANSCHLAGER | |
| 49 | F01020470 | VITE M10X1,5X20 U5739 8.8ZN | SCR. M10X1,5X20 U5739 8.8ZN | VIS M10X1,5X20 U5739 8.8 ZN | SCHRAUBE M10X1,5X20 U5739 ZN | TORNILLOM10X1,5X20 U5739 8.8ZN |
| 50 | F01410062 | ROS.M10 10,5X 18X 2 U6592 ZN | WASHER M10 10,5X 18X 2 U6592 | RONDELLE M10 10,5X18X2 ZN | DICHTUNGSRING M10 10,5X18X2 ZN | RONDANA M10 10,5X18X2 ZN |
| 51 | B030E1027 | CATENA RULLI ISO 16 B-1 27M | ROLLER CHAIN ISO16 B-1 27M | CHAINE ROULEAUX | WALZENKETTE | |
| 52 | B03400241 | MOZZO DI SICUREZZA PICK-UP | SURETY HUB | MOYEU DE SURETE | SICHERHEIT NABE | |
| 53 | B07S01001 | MOZZO CALETTATO | SPLINED HUB | MOYEU | VERZAHNTE NABE | |
| 54 | B02500001 | BRONZINA SICUREZZA PICK-UP | BUSHING | COUSSINET | LAGERBUCHSE | |
| 55 | B00170845 | VITE ZINCATA M 8X45-10.9 U5737 | ZN SCREW M 8X45-10.9 U5737 | VIS | SCHRAUBE | |
| 56 | B00511057 | BUSSOLA DI TRANCIAMENTO INFALD | BUSHING | BAGUE | BUCHSE | |
| 57 | B008B0208 | DADO M 8X1,25 D980 8 ZN | NUT | ECROU | SELBSTSICHERNDE MUTTER M8 KL8 | |

# TAV_175

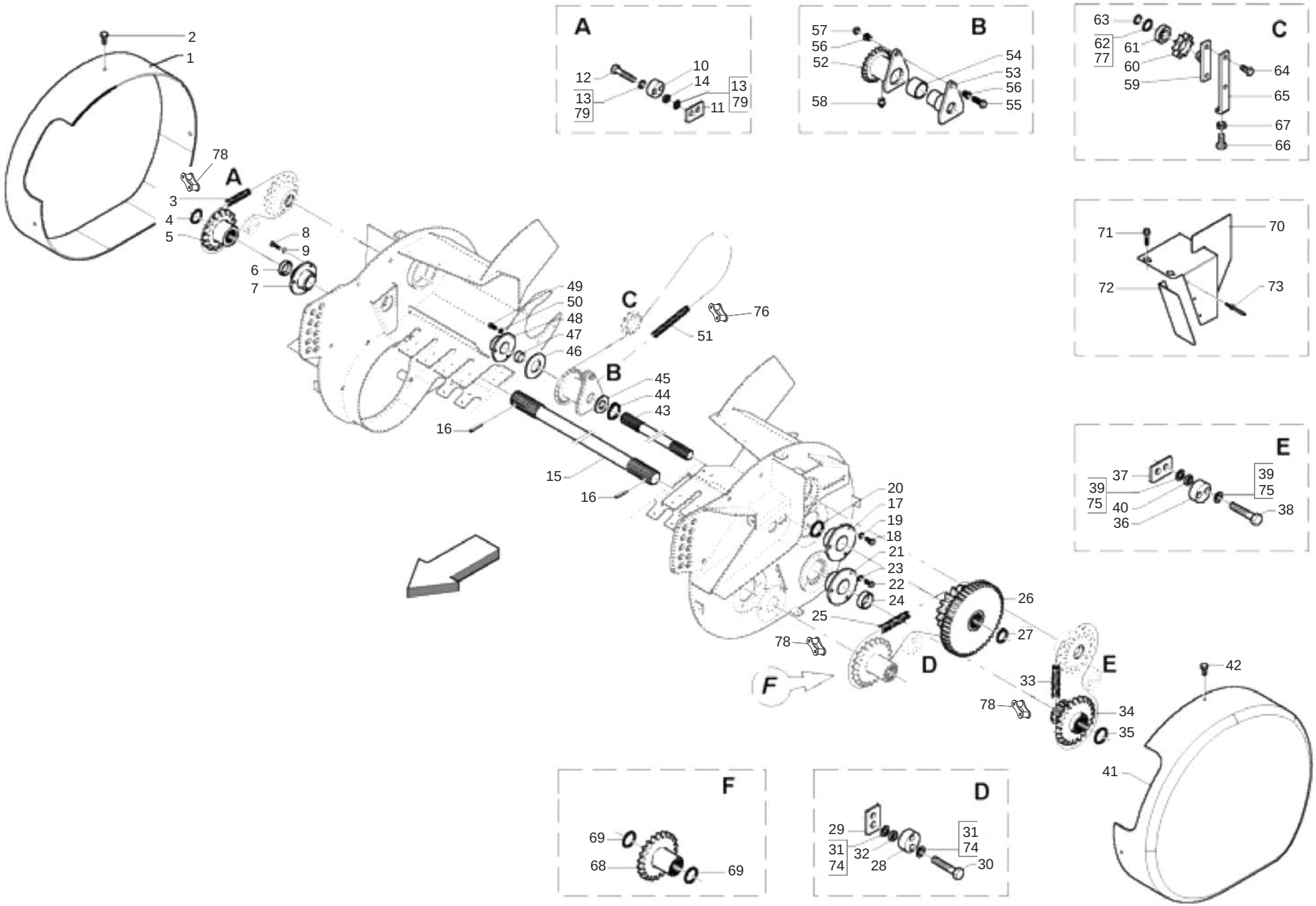




MASCHIO

cod. F07022223

# TRASMISSIONE PICK-UP L
## *PICK-UP L TRANSMISSION*

| Pos. | Cod. | Descrizione | Description | Description | Benennung | Descripcion |
|---|---|---|---|---|---|---|
| 58 | B04200610 | INGRASS.A SFERE M6X1 LUNGO | GREASE NIPPLE | GRAISSEUR HYDRAULIQUE | GERADER SCHMIERNIPPEL M6X1 | |
| 59 | B07S01013 | TENDITORE PU | PICK-UP TENSIONER | TENDEUR PU | PICK-UP SPANNER | |
| 60 | B03400274 | CORONA Z10-1 ISO F52 TRATT | SPROCKET Z=10-1 | ENGRANAGE SPECIAL TRAITE | ZAHNKRANZ Z=10-1 | |
| 61 | B02042515 | CUSC 6205-2RS CAT.A-ST004 | BEARING | ROULEMENT | LAGER 6205-2RS | |
| 62 | B01300104 | SPES. 25,5 37 0,2 | SHIM | ENTRETOISE | BEILAGSCHEIBE 25,5 37 0,2 | |
| 63 | F02050101 | ANEL. D ARR. ALB. 25-E UNI3653 | SEEGER RING | BAGUE SEEGER | SEEGERRING 25-E | |
| 64 | F01020510 | VITE M12X1,75X30 U5739 8.8ZN | SCR. M12X1,75X30 U5739 8.8ZN | VIS M12X1,75X30 U5739 8.8ZN | SCHRAU.M12X1,75X30 U5739 8.8ZN | TORN. M12X1,75X30 U5739 8.8ZN |
| 65 | B0C6P0065 | TIRANTE INFALDATORE | FEEDER TIE ROD | TIRANT AMENEUR | ZUGSTAB RAFFER | |
| 66 | F01020519 | VITE M12X1,75X 60 U5739 8.8ZN | SCREW M12X1,75X 60 U5739 8.8ZN | | | |
| 67 | F01200293 | DADO M12X1,75 U5588 CL8 ZN | NUT M12X1,75 U5588 6S ZN | ECROU M12X1,75 U5588 6S ZN | MUTTER M12X1,75 U5588 6S ZN | TUERCA M12X1,75 U5588 6S ZN |
| 68 | B03400075 | INGRANAGGIO Z22-3 4 CON MOZZO | GEAR Z=22-3 4 WITH HUB | ENGRENAGE | ZAHNRAD | |
| 69 | B01534416 | SPES. 35 43 1 ZINCATO | SHIM | ENTRETOISE | AUSGLEICHSCHEIBE 35X43X1 | |
| 70 | B0C005269 | CARTER SICUREZZA NEW | NEW SAFETY GUARD | CARTER DE SURETE NEW | CARTER SICHERHEITS NEW | |
| 71 | B00370001 | VITE TE M 8X16 A SEZ.TRILOBATA | SCREW TRE M 8X16 SEZ TROUBLED | VIS | SCHRAUBE M 8X15 | |
| 72 | B0C005384 | PROLUNGA CARTER SICUREZZA PUL | SAFETY GUARD EXTENSION | RALLONGE CARTER SURETE | VERLAENGERUNG CARTER | |
| 73 | F02250111 | RIVETTO STR. 4X 6 U9200A AL | RIVET | RIVET | ABREISSNIETEN 4X8 | |
| 74 | F01420120 | ROS.M12 13X 36X2,5 U6593 ZN | WASHER | RONDELLE | SCHEIBE | |
| 75 | F01410076 | ROS.M12 13X 20X2,0 U1749 ZN | WASHER | RONDELLE | SCHEIBE | |
| 76 | B030E0017 | GIUNTO MOLL N26 ISO 16 B-1 | SPRING JOINT N.26 ISO 16 B-1 | JOINT RESSORT | KETTENFEDER | |
| 77 | B01300104 | SPES. 25,5 37 0,2 | SHIM | ENTRETOISE | BEILAGSCHEIBE 25,5 37 0,2 | |
| 78 | B03110007 | GIUNTO MOLL. N. 26 ASA 60-1 | SPRING JOINT N. 26 ASA 60-1 | JOINT | KETTENSCHLOSS | |
| 79 | F01410076 | ROS.M12 13X 20X2,0 U1749 ZN | WASHER | RONDELLE | SCHEIBE | |

# TAV_180

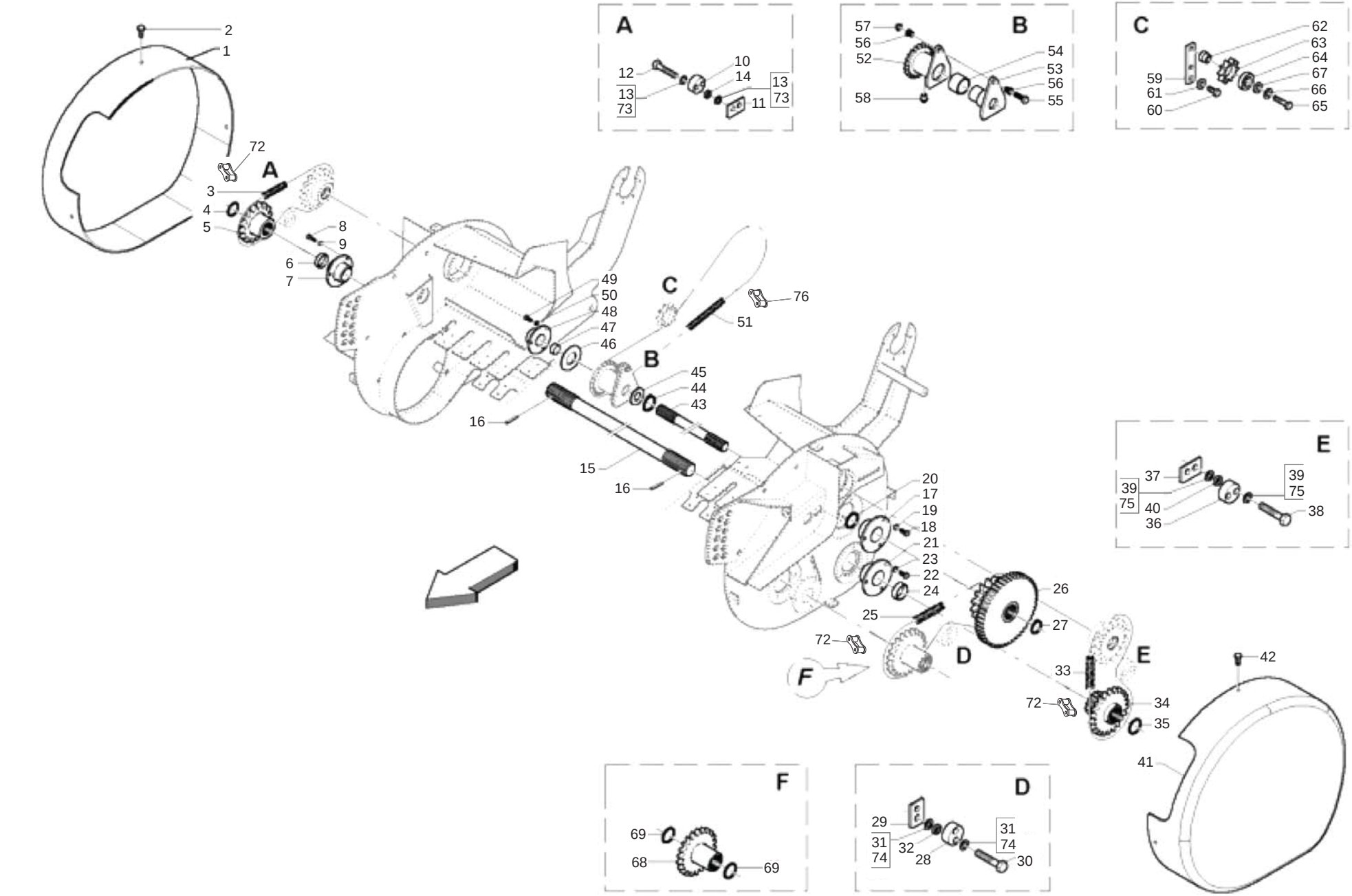




MASCHIO

cod. F07022223

# TRASMISSIONE PICK-UP M CUT
## *PICK-UP M CUT TRANSMISSION*

TAV_180

| Pos. | Cod. | Descrizione | Description | Description | Benennung | Descripcion |
|---|---|---|---|---|---|---|
| 1 | B07SP0001G | CARTER DX PU | PU RIGHT GUARD | | | |
| 2 | F01020436 | VITE M8X1,25X20 U5739 8.8ZN | SCR. M8X1,25X20 U5739 8.8ZN | VIS M8X1,25X 20 U5739 8.8 ZN | SCHRAUBE M8X1,25X20U5739 8.8ZN | TORN. M8X1,25X20 U5739 8.8 ZN |
| 3 | B03111057 | CATENA RULLI ASA 60-1 57 MGL | ROLLER CHAIN | CHAINE ROULEAUX | KETTE ASA 60-1 57MGL ISO1 | |
| 4 | B01534416 | SPES. 35 43 1 ZINCATO | SHIM | ENTRETOISE | AUSGLEICHSCHEIBE 35X43X1 | |
| 5 | B03400003 | INGR. Z=22; 3 4; ISO 12B-1 PU | GEAR Z=22-3 4 | ENGRANAGE | KETTENRAD Z=22-3 4 | |
| 6 | B01330957 | DISTANZIALE 35-48-7 | SPACER | ENTRETOISE | DISTANZSTUECK 35X48X7 | |
| 7 | B02353035 | SUPPORTO FLANG.TONDO 35 LAMIER | BEARING FLANGED SUPPORT D.35 | SUPPORT FLANGE | FLANSCHLAGER | |
| 8 | F01020472 | VITE M10X1,5X25 U5739 8.8ZN | SCR. M10X1,5X25 U5739 8.8ZN | VIS M10X1,5X25 U5739 8.8 ZN | SCHRAUBE M10X1,5X25 U5739 8.8 | TORNILLO 10X25 U5739 8.8 ZN |
| 9 | F01410062 | ROS.M10 10,5X 18X 2 U6592 ZN | WASHER M10 10,5X 18X 2 U6592 | RONDELLE M10 10,5X18X2 ZN | DICHTUNGSRING M10 10,5X18X2 ZN | RONDANA M10 10,5X18X2 ZN |
| 10 | B07VP0513 | TENDICATENA IN NYLON | NYLON CHAIN TIGHTENER | | | |
| 11 | BC003172L | ATTACCO TENDICATENA | CHAIN TIGHTENER COUPLING | | | |
| 12 | F01020164 | VITE M12X1,75X70 U5737 8.8ZN | SCREW M12X1,75X70 U5737 8.8ZN | VIS M12X1,75X70 U5737 8.8 ZN | SCHR. M12X1,75X70 U5737 8.8 ZN | TORN. M12X1,75X70 U5737 8.8 ZN |
| 13 | F01410076 | ROS.M12 13X 20X2,0 U1749 ZN | WASHER | RONDELLE | SCHEIBE | |
| 14 | B01523831 | RALLA 12 33 5 | FIFTH WHEEL | BUTEE | UMBORDELUNG 12 33 5 | |
| 15 | B03A34361 | CONTRALBERO LUNGO PU 200 | COUNTERSHAFT | CONTRE ARBRE | VORGELEGEWELLE 200 | |
| 16 | F02100124 | SPINA E.P. 3X 12 U6873 C70 BR | PIN EL. 6X50 U6873 C70 BR | GOUJON 6X50 U6873 C70 BR | STIFT 6X50 U6873 C70 BR | ESPINA 6X50 U6873 C70 BR |
| 17 | B02353035 | SUPPORTO FLANG.TONDO 35 LAMIER | BEARING FLANGED SUPPORT D.35 | SUPPORT FLANGE | FLANSCHLAGER | |
| 18 | F01020470 | VITE M10X1,5X20 U5739 8.8ZN | SCR. M10X1,5X20 U5739 8.8ZN | VIS M10X1,5X20 U5739 8.8 ZN | SCHRAUBE M10X1,5X20 U5739 ZN | TORNILLOM10X1,5X20 U5739 8.8ZN |
| 19 | F01410062 | ROS.M10 10,5X 18X 2 U6592 ZN | WASHER M10 10,5X 18X 2 U6592 | RONDELLE M10 10,5X18X2 ZN | DICHTUNGSRING M10 10,5X18X2 ZN | RONDANA M10 10,5X18X2 ZN |
| 20 | B01534416 | SPES. 35 43 1 ZINCATO | SHIM | ENTRETOISE | AUSGLEICHSCHEIBE 35X43X1 | |
| 21 | B02353035 | SUPPORTO FLANG.TONDO 35 LAMIER | BEARING FLANGED SUPPORT D.35 | SUPPORT FLANGE | FLANSCHLAGER | |
| 22 | F01020472 | VITE M10X1,5X25 U5739 8.8ZN | SCR. M10X1,5X25 U5739 8.8ZN | VIS M10X1,5X25 U5739 8.8 ZN | SCHRAUBE M10X1,5X25 U5739 8.8 | TORNILLO 10X25 U5739 8.8 ZN |
| 23 | F01410062 | ROS.M10 10,5X 18X 2 U6592 ZN | WASHER M10 10,5X 18X 2 U6592 | RONDELLE M10 10,5X18X2 ZN | DICHTUNGSRING M10 10,5X18X2 ZN | RONDANA M10 10,5X18X2 ZN |
| 24 | B01330957 | DISTANZIALE 35-48-7 | SPACER | ENTRETOISE | DISTANZSTUECK 35X48X7 | |
| 25 | B03111046 | CATENA RULLI ASA 60-1 46 MGL | ROLLER CHAIN ASA60-1 46 MGL | CHAINE ROULEAUX | KETTE DER WALZEN | |
| 26 | B03L34402 | INGR. DOPPIO Z=17 48 CON MOZZO | GEAR | ENGRANAGE | ZAHNRADPAAR Z=17 48 | |
| 27 | B01700035 | ANEL. D ARR. ALB. 35-E UNI3653 | SEEGER RING | BAGUE SEEGER | SEEGERRING 35-E | |
| 28 | B07VP0513 | TENDICATENA IN NYLON | NYLON CHAIN TIGHTENER | | | |
| 29 | BC003172L | ATTACCO TENDICATENA | CHAIN TIGHTENER COUPLING | | | |
| 30 | F01020160 | VITE M12X1,75X60 U5737 8.8ZN | SCR. M12X1,75X60 U5737 8.8ZN | VIS M12X1,75X60 U5737 8.8 ZN | SCHRA.M12X1,75X60 U5737 8.8 ZN | TORN. M12X1,75X60 U5737 8.8 ZN |
| 31 | F01420120 | ROS.M12 13X 36X2,5 U6593 ZN | WASHER | RONDELLE | SCHEIBE | |
| 32 | B01523831 | RALLA 12 33 5 | FIFTH WHEEL | BUTEE | UMBORDELUNG 12 33 5 | |
| 33 | B03111057 | CATENA RULLI ASA 60-1 57 MGL | ROLLER CHAIN | CHAINE ROULEAUX | KETTE ASA 60-1 57MGL ISO1 | |
| 34 | B03400271 | INGR.DOPPIO Z=16 22 CON MOZZO | DOUBLE GEAR Z=16 22 WITH HUB | ENGRANAGE | ZAHNRADPAAR | |
| 35 | B01534416 | SPES. 35 43 1 ZINCATO | SHIM | ENTRETOISE | AUSGLEICHSCHEIBE 35X43X1 | |
| 36 | B07VP0513 | TENDICATENA IN NYLON | NYLON CHAIN TIGHTENER | | | |
| 37 | BC003172L | ATTACCO TENDICATENA | CHAIN TIGHTENER COUPLING | | | |
| 38 | F01020164 | VITE M12X1,75X70 U5737 8.8ZN | SCREW M12X1,75X70 U5737 8.8ZN | VIS M12X1,75X70 U5737 8.8 ZN | SCHR. M12X1,75X70 U5737 8.8 ZN | TORN. M12X1,75X70 U5737 8.8 ZN |
| 39 | F01410076 | ROS.M12 13X 20X2,0 U1749 ZN | WASHER | RONDELLE | SCHEIBE | |
| 40 | B01523831 | RALLA 12 33 5 | FIFTH WHEEL | BUTEE | UMBORDELUNG 12 33 5 | |
| 41 | B07SP0002 | CARTER SX PU | PU LEFT GUARD | CARTER GAUCHE PU | CARTER LINKS PU | |
| 42 | F01020436 | VITE M8X1,25X20 U5739 8.8ZN | SCR. M8X1,25X20 U5739 8.8ZN | VIS M8X1,25X 20 U5739 8.8 ZN | SCHRAUBE M8X1,25X20U5739 8.8ZN | TORN. M8X1,25X20 U5739 8.8 ZN |
| 43 | B03500279 | CONTRALBERO CORTO PU 200 | SHORT COUNTERSHAFT 200 | CONTRE ARBRE COURT PU 200 | KURZE VORGELEGEWELLE 200 | |
| 44 | B01700040 | ANEL. D ARR. ALBERO 40-E UNI 3 | SEEGER RING | BAGUE SEEGER | SEEGERRING 40-E | |
| 45 | B01300126 | SPES. 40 48 1 ZINC.ST_013 | SHIM | ENTRETOISE | DISTANZSTUECK 40 408 1 | |
| 46 | B01534395 | RALLA 35.5X 62 X 3 ZINCATO | FIFTH WHEEL | BUTEE | SPEZIALSCHEIBE | |
| 47 | B01300607 | DISTANZIALE 35X42X35 | SPACER | ENTRETOISE | DISTANZSTUECK 35X42X35 | |
| 48 | B02353035 | SUPPORTO FLANG.TONDO 35 LAMIER | BEARING FLANGED SUPPORT D.35 | SUPPORT FLANGE | FLANSCHLAGER | |
| 49 | F01020470 | VITE M10X1,5X20 U5739 8.8ZN | SCR. M10X1,5X20 U5739 8.8ZN | VIS M10X1,5X20 U5739 8.8 ZN | SCHRAUBE M10X1,5X20 U5739 ZN | TORNILLOM10X1,5X20 U5739 8.8ZN |
| 50 | F01410062 | ROS.M10 10,5X 18X 2 U6592 ZN | WASHER M10 10,5X 18X 2 U6592 | RONDELLE M10 10,5X18X2 ZN | DICHTUNGSRING M10 10,5X18X2 ZN | RONDANA M10 10,5X18X2 ZN |
| 51 | B030E1052 | CATENA RULLI ISO 16 B-1 52M | ROLLER CHAIN | CHAINE ROULEAUX | WALZENKETTE | |
| 52 | B03400241 | MOZZO DI SICUREZZA PICK-UP | SURETY HUB | MOYEU DE SURETE | SICHERHEIT NABE | |
| 53 | B07S01001 | MOZZO CALETTATO | SPLINED HUB | MOYEU | VERZAHNTE NABE | |
| 54 | B02500001 | BRONZINA SICUREZZA PICK-UP | BUSHING | COUSSINET | LAGERBUCHSE | |
| 55 | B00170845 | VITE ZINCATA M 8X45-10.9 U5737 | ZN SCREW M 8X45-10.9 U5737 | VIS | SCHRAUBE | |
| 56 | B00511057 | BUSSOLA DI TRANCIAMENTO INFALD | BUSHING | BAGUE | BUCHSE | |
| 57 | B008B0208 | DADO M 8X1,25 D980 8 ZN | NUT | ECROU | SELBSTSICHERNDE MUTTER M8 KL8 | |

# TAV_180

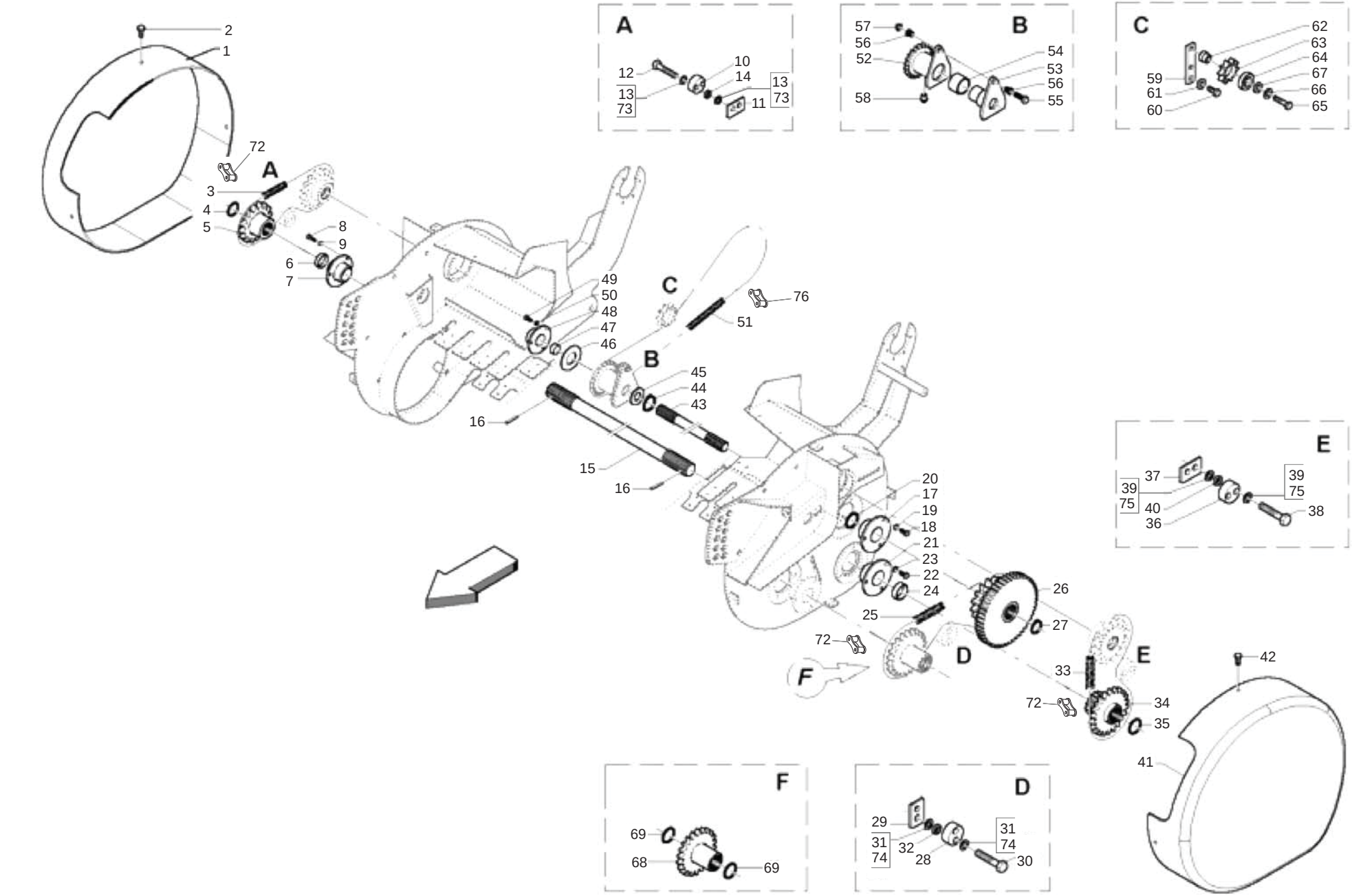




MASCHIO

cod. F07022223

# TRASMISSIONE PICK-UP M CUT
## *PICK-UP M CUT TRANSMISSION*

| Pos. | Cod. | Descrizione | Description | Description | Benennung | Descripcion |
|---|---|---|---|---|---|---|
| 58 | B04200610 | INGRASS.A SFERE M6X1 LUNGO | GREASE NIPPLE | GRAISSEUR HYDRAULIQUE | GERADER SCHMIERNIPPEL M6X1 | |
| 59 | B0C002390 | FERMO | LOCK | ARRET | ARRETIERUNG | |
| 60 | F01020510 | VITE M12X1,75X30 U5739 8.8ZN | SCR. M12X1,75X30 U5739 8.8ZN | VIS M12X1,75X30 U5739 8.8ZN | SCHRAU.M12X1,75X30 U5739 8.8ZN | TORN. M12X1,75X30 U5739 8.8ZN |
| 61 | B01518412 | RALLA 12 38 5 | FIFTH WHEEL | BUTEE | SCHEIBE | |
| 62 | B01300302 | PERNO GALOPPINO | PIN | TOURILLON | BOLZEN FUER KETTENZAHNRAD | |
| 63 | B03400274 | CORONA Z10-1 ISO F52 TRATT | SPROCKET Z=10-1 | ENGRANAGE SPECIAL TRAITE | ZAHNKRANZ Z=10-1 | |
| 64 | B02042515 | CUSC 6205-2RS CAT.A-ST004 | BEARING | ROULEMENT | LAGER 6205-2RS | |
| 65 | F01020160 | VITE M12X1,75X60 U5737 8.8ZN | SCR. M12X1,75X60 U5737 8.8ZN | VIS M12X1,75X60 U5737 8.8 ZN | SCHRA.M12X1,75X60 U5737 8.8 ZN | TORN. M12X1,75X60 U5737 8.8 ZN |
| 66 | F01420120 | ROS.M12 13X 36X2,5 U6593 ZN | WASHER | RONDELLE | SCHEIBE | |
| 67 | B01518412 | RALLA 12 38 5 | FIFTH WHEEL | BUTEE | SCHEIBE | |
| 68 | B03400240 | INGR. Z=22-3 4 ISO CON MOZZO | GEAR Z=22-3 4 ISO WITH HUB | ENGRENAGE | ZAHNRAD Z=22-3 4 ISO MIT NAB | |
| 69 | B01300101 | SPES. 30,3 40 1 ZINCATO | SHIM GALV | ENTRETOISE GALV | DISTANZSTUECK 30,3 40 1 | |
| 72 | B03110007 | GIUNTO MOLL. N. 26 ASA 60-1 | SPRING JOINT N. 26 ASA 60-1 | JOINT | KETTENSCHLOSS | |
| 73 | F01420120 | ROS.M12 13X 36X2,5 U6593 ZN | WASHER | RONDELLE | SCHEIBE | |
| 74 | F01410076 | ROS.M12 13X 20X2,0 U1749 ZN | WASHER | RONDELLE | SCHEIBE | |
| 75 | F01420120 | ROS.M12 13X 36X2,5 U6593 ZN | WASHER | RONDELLE | SCHEIBE | |
| 76 | B030E0017 | GIUNTO MOLL N26 ISO 16 B-1 | SPRING JOINT N.26 ISO 16 B-1 | JOINT RESSORT | KETTENFEDER | |

# TAV_185

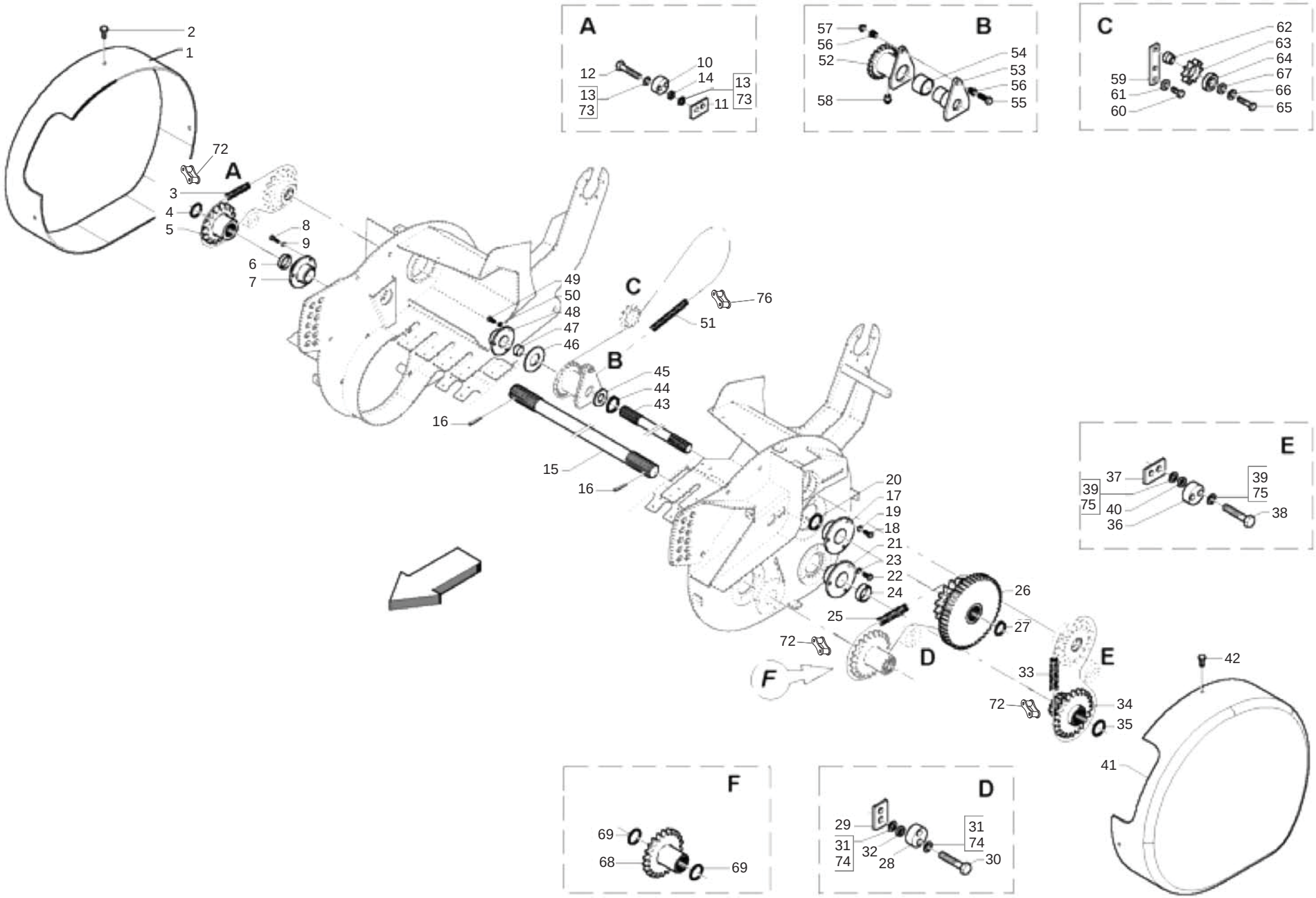




MASCHIO

cod. F07022223

# TRASMISSIONE PICK-UP L CUT
## *PICK-UP L CUT TRANSMISSION*

TAV_185

| Pos. | Cod. | Descrizione | Description | Description | Benennung | Descripcion |
|---|---|---|---|---|---|---|
| 1 | B07SP0001G | CARTER DX PU | PU RIGHT GUARD | | | |
| 2 | F01020436 | VITE M8X1,25X20 U5739 8.8ZN | SCR. M8X1,25X20 U5739 8.8ZN | VIS M8X1,25X 20 U5739 8.8 ZN | SCHRAUBE M8X1,25X20U5739 8.8ZN | TORN. M8X1,25X20 U5739 8.8 ZN |
| 3 | B03111057 | CATENA RULLI ASA 60-1 57 MGL | ROLLER CHAIN | CHAINE ROULEAUX | KETTE ASA 60-1 57MGL ISO1 | |
| 4 | B01534416 | SPES. 35 43 1 ZINCATO | SHIM | ENTRETOISE | AUSGLEICHSCHEIBE 35X43X1 | |
| 5 | B03400003 | INGR. Z=22; 3 4; ISO 12B-1 PU | GEAR Z=22-3 4 | ENGRANAGE | KETTENRAD Z=22-3 4 | |
| 6 | B01330957 | DISTANZIALE 35-48-7 | SPACER | ENTRETOISE | DISTANZSTUECK 35X48X7 | |
| 7 | B02353035 | SUPPORTO FLANG.TONDO 35 LAMIER | BEARING FLANGED SUPPORT D.35 | SUPPORT FLANGE | FLANSCHLAGER | |
| 8 | F01020472 | VITE M10X1,5X25 U5739 8.8ZN | SCR. M10X1,5X25 U5739 8.8ZN | VIS M10X1,5X25 U5739 8.8 ZN | SCHRAUBE M10X1,5X25 U5739 8.8 | TORNILLO 10X25 U5739 8.8 ZN |
| 9 | F01410062 | ROS.M10 10,5X 18X 2 U6592 ZN | WASHER M10 10,5X 18X 2 U6592 | RONDELLE M10 10,5X18X2 ZN | DICHTUNGSRING M10 10,5X18X2 ZN | RONDANA M10 10,5X18X2 ZN |
| 10 | B07VP0513 | TENDICATENA IN NYLON | NYLON CHAIN TIGHTENER | | | |
| 11 | BC003172L | ATTACCO TENDICATENA | CHAIN TIGHTENER COUPLING | | | |
| 12 | F01020164 | VITE M12X1,75X70 U5737 8.8ZN | SCREW M12X1,75X70 U5737 8.8ZN | VIS M12X1,75X70 U5737 8.8 ZN | SCHR. M12X1,75X70 U5737 8.8 ZN | TORN. M12X1,75X70 U5737 8.8 ZN |
| 13 | F01410076 | ROS.M12 13X 20X2,0 U1749 ZN | WASHER | RONDELLE | SCHEIBE | |
| 14 | B01523831 | RALLA 12 33 5 | FIFTH WHEEL | BUTEE | UMBORDELUNG 12 33 5 | |
| 15 | B03500045 | CONTRALBERO LUNGO PU 220 | COUNTERSHAFT 220 | CONTRE-ARBRE 200 | VORGELEGEWELLE | |
| 16 | F02100124 | SPINA E.P. 3X 12 U6873 C70 BR | PIN EL. 6X50 U6873 C70 BR | GOUJON 6X50 U6873 C70 BR | STIFT 6X50 U6873 C70 BR | ESPINA 6X50 U6873 C70 BR |
| 17 | B02353035 | SUPPORTO FLANG.TONDO 35 LAMIER | BEARING FLANGED SUPPORT D.35 | SUPPORT FLANGE | FLANSCHLAGER | |
| 18 | F01020470 | VITE M10X1,5X20 U5739 8.8ZN | SCR. M10X1,5X20 U5739 8.8ZN | VIS M10X1,5X20 U5739 8.8 ZN | SCHRAUBE M10X1,5X20 U5739 ZN | TORNILLOM10X1,5X20 U5739 8.8ZN |
| 19 | F01410062 | ROS.M10 10,5X 18X 2 U6592 ZN | WASHER M10 10,5X 18X 2 U6592 | RONDELLE M10 10,5X18X2 ZN | DICHTUNGSRING M10 10,5X18X2 ZN | RONDANA M10 10,5X18X2 ZN |
| 20 | B01534416 | SPES. 35 43 1 ZINCATO | SHIM | ENTRETOISE | AUSGLEICHSCHEIBE 35X43X1 | |
| 21 | B02353035 | SUPPORTO FLANG.TONDO 35 LAMIER | BEARING FLANGED SUPPORT D.35 | SUPPORT FLANGE | FLANSCHLAGER | |
| 22 | F01020472 | VITE M10X1,5X25 U5739 8.8ZN | SCR. M10X1,5X25 U5739 8.8ZN | VIS M10X1,5X25 U5739 8.8 ZN | SCHRAUBE M10X1,5X25 U5739 8.8 | TORNILLO 10X25 U5739 8.8 ZN |
| 23 | F01410062 | ROS.M10 10,5X 18X 2 U6592 ZN | WASHER M10 10,5X 18X 2 U6592 | RONDELLE M10 10,5X18X2 ZN | DICHTUNGSRING M10 10,5X18X2 ZN | RONDANA M10 10,5X18X2 ZN |
| 24 | B01330957 | DISTANZIALE 35-48-7 | SPACER | ENTRETOISE | DISTANZSTUECK 35X48X7 | |
| 25 | B03111046 | CATENA RULLI ASA 60-1 46 MGL | ROLLER CHAIN ASA60-1 46 MGL | CHAINE ROULEAUX | KETTE DER WALZEN | |
| 26 | B03L34402 | INGR. DOPPIO Z=17 48 CON MOZZO | GEAR | ENGRANAGE | ZAHNRADPAAR Z=17 48 | |
| 27 | B01700035 | ANEL. D ARR. ALB. 35-E UNI3653 | SEEGER RING | BAGUE SEEGER | SEEGERRING 35-E | |
| 28 | B07VP0513 | TENDICATENA IN NYLON | NYLON CHAIN TIGHTENER | | | |
| 29 | BC003172L | ATTACCO TENDICATENA | CHAIN TIGHTENER COUPLING | | | |
| 30 | F01020160 | VITE M12X1,75X60 U5737 8.8ZN | SCR. M12X1,75X60 U5737 8.8ZN | VIS M12X1,75X60 U5737 8.8 ZN | SCHRA.M12X1,75X60 U5737 8.8 ZN | TORN. M12X1,75X60 U5737 8.8 ZN |
| 31 | F01420120 | ROS.M12 13X 36X2,5 U6593 ZN | WASHER | RONDELLE | SCHEIBE | |
| 32 | B01523831 | RALLA 12 33 5 | FIFTH WHEEL | BUTEE | UMBORDELUNG 12 33 5 | |
| 33 | B03111057 | CATENA RULLI ASA 60-1 57 MGL | ROLLER CHAIN | CHAINE ROULEAUX | KETTE ASA 60-1 57MGL ISO1 | |
| 34 | B03400271 | INGR.DOPPIO Z=16 22 CON MOZZO | DOUBLE GEAR Z=16 22 WITH HUB | ENGRANAGE | ZAHNRADPAAR | |
| 35 | B01534416 | SPES. 35 43 1 ZINCATO | SHIM | ENTRETOISE | AUSGLEICHSCHEIBE 35X43X1 | |
| 36 | B07VP0513 | TENDICATENA IN NYLON | NYLON CHAIN TIGHTENER | | | |
| 37 | BC003172L | ATTACCO TENDICATENA | CHAIN TIGHTENER COUPLING | | | |
| 38 | F01020164 | VITE M12X1,75X70 U5737 8.8ZN | SCREW M12X1,75X70 U5737 8.8ZN | VIS M12X1,75X70 U5737 8.8 ZN | SCHR. M12X1,75X70 U5737 8.8 ZN | TORN. M12X1,75X70 U5737 8.8 ZN |
| 39 | F01420120 | ROS.M12 13X 36X2,5 U6593 ZN | WASHER | RONDELLE | SCHEIBE | |
| 40 | B01523831 | RALLA 12 33 5 | FIFTH WHEEL | BUTEE | UMBORDELUNG 12 33 5 | |
| 41 | B07SP0002 | CARTER SX PU | PU LEFT GUARD | CARTER GAUCHE PU | CARTER LINKS PU | |
| 42 | F01020436 | VITE M8X1,25X20 U5739 8.8ZN | SCR. M8X1,25X20 U5739 8.8ZN | VIS M8X1,25X 20 U5739 8.8 ZN | SCHRAUBE M8X1,25X20U5739 8.8ZN | TORN. M8X1,25X20 U5739 8.8 ZN |
| 43 | B03500280 | CONTRALBERO CORTO PU 220 | SHORT COUNTER SHAFT 220 | CONTRE ARBRE COURT PU 220 | KURZE VORGELEGEWELLE 220 | |
| 44 | B01700040 | ANEL. D ARR. ALBERO 40-E UNI 3 | SEEGER RING | BAGUE SEEGER | SEEGERRING 40-E | |
| 45 | B01300126 | SPES. 40 48 1 ZINC.ST_013 | SHIM | ENTRETOISE | DISTANZSTUECK 40 408 1 | |
| 46 | B01534395 | RALLA 35.5X 62 X 3 ZINCATO | FIFTH WHEEL | BUTEE | SPEZIALSCHEIBE | |
| 47 | B01300607 | DISTANZIALE 35X42X35 | SPACER | ENTRETOISE | DISTANZSTUECK 35X42X35 | |
| 48 | B02353035 | SUPPORTO FLANG.TONDO 35 LAMIER | BEARING FLANGED SUPPORT D.35 | SUPPORT FLANGE | FLANSCHLAGER | |
| 49 | F01020470 | VITE M10X1,5X20 U5739 8.8ZN | SCR. M10X1,5X20 U5739 8.8ZN | VIS M10X1,5X20 U5739 8.8 ZN | SCHRAUBE M10X1,5X20 U5739 ZN | TORNILLOM10X1,5X20 U5739 8.8ZN |
| 50 | F01410062 | ROS.M10 10,5X 18X 2 U6592 ZN | WASHER M10 10,5X 18X 2 U6592 | RONDELLE M10 10,5X18X2 ZN | DICHTUNGSRING M10 10,5X18X2 ZN | RONDANA M10 10,5X18X2 ZN |
| 51 | B030E1052 | CATENA RULLI ISO 16 B-1 52M | ROLLER CHAIN | CHAINE ROULEAUX | WALZENKETTE | |
| 52 | B03400241 | MOZZO DI SICUREZZA PICK-UP | SURETY HUB | MOYEU DE SURETE | SICHERHEIT NABE | |
| 53 | B07S01001 | MOZZO CALETTATO | SPLINED HUB | MOYEU | VERZAHNTE NABE | |
| 54 | B02500001 | BRONZINA SICUREZZA PICK-UP | BUSHING | COUSSINET | LAGERBUCHSE | |
| 55 | B00170845 | VITE ZINCATA M 8X45-10.9 U5737 | ZN SCREW M 8X45-10.9 U5737 | VIS | SCHRAUBE | |
| 56 | B00511057 | BUSSOLA DI TRANCIAMENTO INFALD | BUSHING | BAGUE | BUCHSE | |
| 57 | B008B0208 | DADO M 8X1,25 D980 8 ZN | NUT | ECROU | SELBSTSICHERNDE MUTTER M8 KL8 | |

# TAV_185

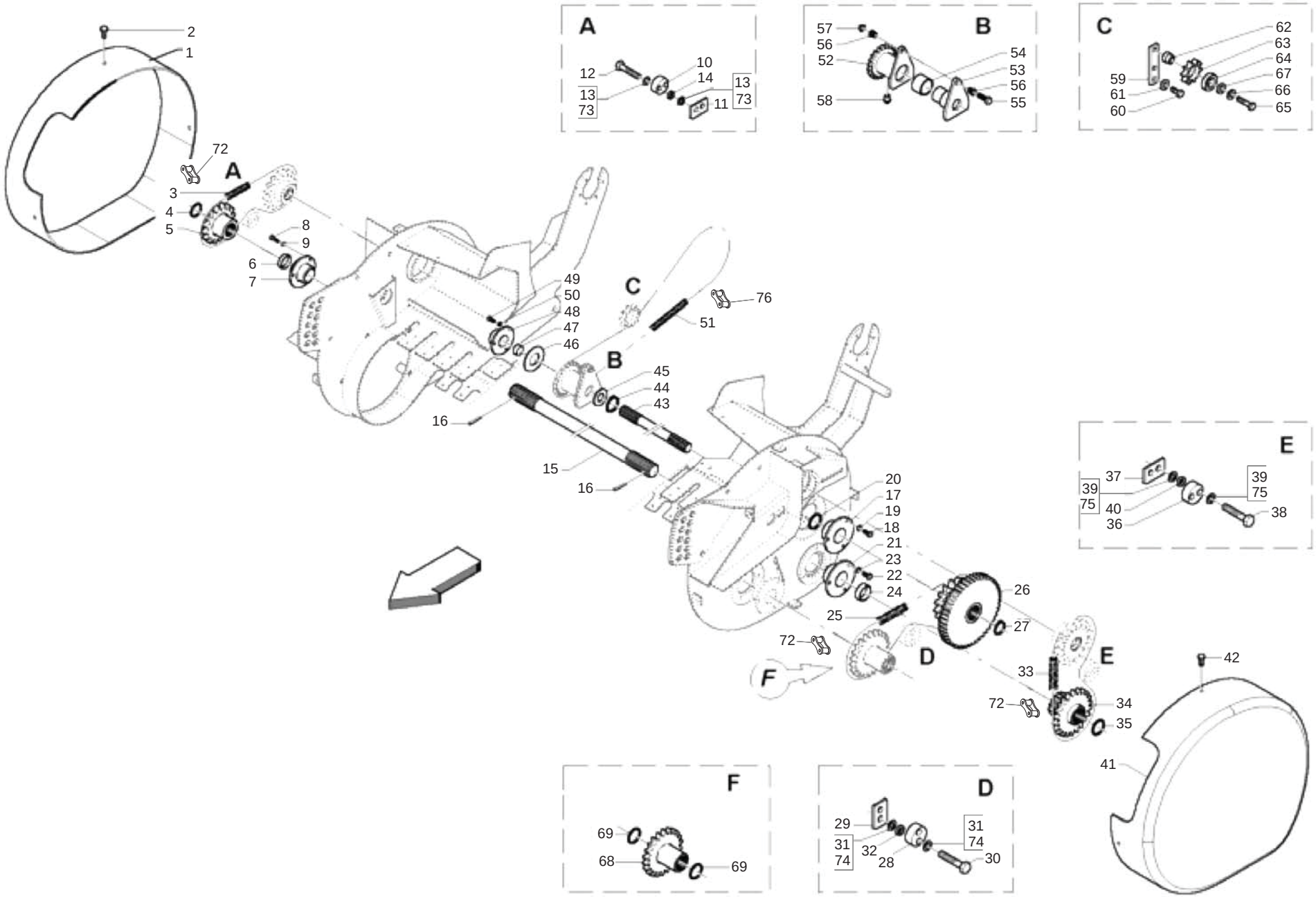




MASCHIO

cod. F07022223

# TRASMISSIONE PICK-UP L CUT
## *PICK-UP L CUT TRANSMISSION*

TAV_185

| Pos. | Cod. | Descrizione | Description | Description | Benennung | Descripcion |
|---|---|---|---|---|---|---|
| 58 | B04200610 | INGRASS.A SFERE M6X1 LUNGO | GREASE NIPPLE | GRAISSEUR HYDRAULIQUE | GERADER SCHMIERNIPPEL M6X1 | |
| 59 | B0C002390 | FERMO | LOCK | ARRET | ARRETIERUNG | |
| 60 | F01020510 | VITE M12X1,75X30 U5739 8.8ZN | SCR. M12X1,75X30 U5739 8.8ZN | VIS M12X1,75X30 U5739 8.8ZN | SCHRAU.M12X1,75X30 U5739 8.8ZN | TORN. M12X1,75X30 U5739 8.8ZN |
| 61 | B01518412 | RALLA 12 38 5 | FIFTH WHEEL | BUTEE | SCHEIBE | |
| 62 | B01300302 | PERNO GALOPPINO | PIN | TOURILLON | BOLZEN FUER KETTENZAHNRAD | |
| 63 | B03400274 | CORONA Z10-1 ISO F52 TRATT | SPROCKET Z=10-1 | ENGRANAGE SPECIAL TRAITE | ZAHNKRANZ Z=10-1 | |
| 64 | B02042515 | CUSC 6205-2RS CAT.A-ST004 | BEARING | ROULEMENT | LAGER 6205-2RS | |
| 65 | F01020160 | VITE M12X1,75X60 U5737 8.8ZN | SCR. M12X1,75X60 U5737 8.8ZN | VIS M12X1,75X60 U5737 8.8 ZN | SCHRA.M12X1,75X60 U5737 8.8 ZN | TORN. M12X1,75X60 U5737 8.8 ZN |
| 66 | F01420120 | ROS.M12 13X 36X2,5 U6593 ZN | WASHER | RONDELLE | SCHEIBE | |
| 67 | B01518412 | RALLA 12 38 5 | FIFTH WHEEL | BUTEE | SCHEIBE | |
| 68 | B03400075 | INGRANAGGIO Z22-3 4 CON MOZZO | GEAR Z=22-3 4 WITH HUB | ENGRENAGE | ZAHNRAD | |
| 69 | B01534416 | SPES. 35 43 1 ZINCATO | SHIM | ENTRETOISE | AUSGLEICHSCHEIBE 35X43X1 | |
| 72 | B03110007 | GIUNTO MOLL. N. 26 ASA 60-1 | SPRING JOINT N. 26 ASA 60-1 | JOINT | KETTENSCHLOSS | |
| 73 | F01420120 | ROS.M12 13X 36X2,5 U6593 ZN | WASHER | RONDELLE | SCHEIBE | |
| 74 | F01410076 | ROS.M12 13X 20X2,0 U1749 ZN | WASHER | RONDELLE | SCHEIBE | |
| 75 | F01410076 | ROS.M12 13X 20X2,0 U1749 ZN | WASHER | RONDELLE | SCHEIBE | |
| 76 | B030E0017 | GIUNTO MOLL N26 ISO 16 B-1 | SPRING JOINT N.26 ISO 16 B-1 | JOINT RESSORT | KETTENFEDER | |

# TAV_190

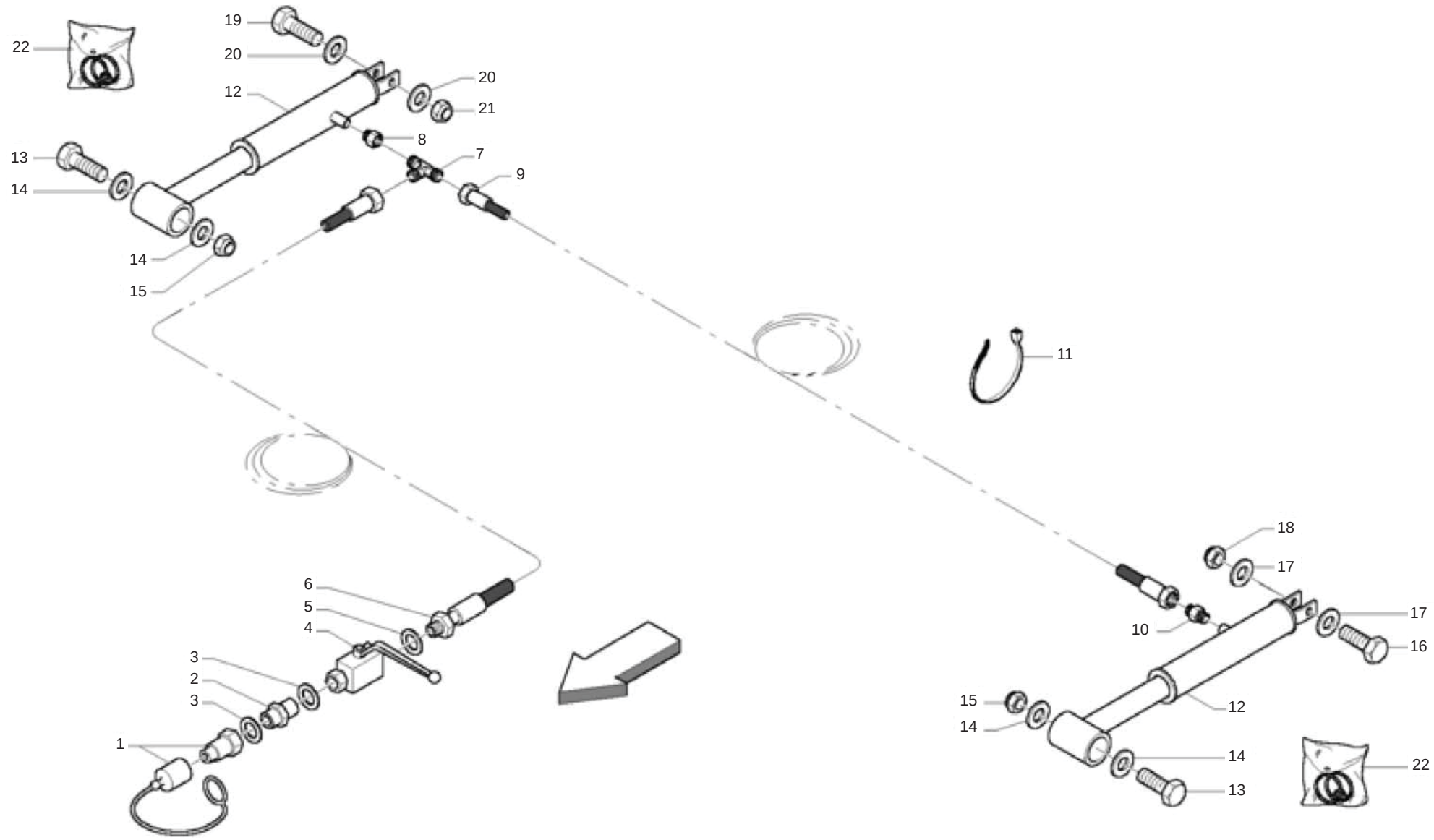
22
19
20
12
20
21
8
13
7
14
9
14
15
11
18
17
6
5
4
17
10
16
3
2
3
15
12
1
14
14
22
13

# IMPIANTO IDRAULICO PICK-UP
## *PICK-UP HYDRAULIC SYSTEM*

TAV_190

| Pos. | Cod. | Descrizione | Description | Description | Benennung | Descripcion |
|---|---|---|---|---|---|---|
| 1 | B0H6000A0 | INNESTO RAP.NV 12GAS-M | QUICK CLUTCH | EMBRAYAGE | SCHNELLKUPPLUNG | |
| 2 | B0H733671 | NIPPLO RID.FORO 1MM. 1 2 -1 4 | NIPPLE 1 2 -1 4 | NIPPLE 1 MM 1 2 -1 4 | NIPPEL 1 2 -1 4 | |
| 3 | B01441415 | RONDELLA IN RAME 1 4 | WASHER | RONDELLE | BEILAGSCHEIBE 1 4 13X19X1,5 | |
| 4 | B0H000119 | RUBIN. A SFER.A.P.1 4 FEMM.-F | BALL COCK | ROBINET 1 4 FEMELLE | KUGELHAHN | |
| 5 | B01442015 | ROS. 21 X27X1,5 RAME -1 2 | WASHER | RONDELLE | BEILAGSCHEIBE 1 2 | |
| 6 | B0H000250 | TUBO IDRAUL. | HYDRAULIC HOSE | TUYAU HYDRAULIQUE | HYDRAULIKSCHLAUCH | |
| 7 | B0H000098 | RACCORDO T 10 TN 127-10LR | UNION T 10 | RACCORD T 10 | T.VERSCHRAUBUNG | |
| 8 | B0H000265 | RID. RASTELLI TN143-3 8 X1 4 R | REDUCTION TN143-3 8 X1 4 R | REDUCTION TN 143-3 8 X1 4 R | REDUKTION TN 143-3 8 | |
| 9 | B0H000251 | TUBO IDRAUL. | HYDRAULIC HOSE | TUYAU HYDRAULIQUE | HYDRAULIKSCHLAUCH | |
| 10 | B0H000139 | RACCORDO I 10 RASTELLI | UNION I 10 | RACCORD I SEULEMENT CORPS | VERBINDUNGSTUECK I 10 | |
| 11 | F05150055 | FASCETTA LUMEFIX 3,6X180 | CLAMP LUMEFIX | BANDE LUMEFIX | MANSCHETTE LUMEFIX | |
| 12 | BH400062L | MARTINETTO PICK-UP | CYLINDER PICK-UP | | | |
| 13 | F01020976 | VITE M16X 2X55 U5737 8.8 ZN | SCREW M16X 2X55 U5737 8.8 ZN | | | |
| 14 | F01410100 | ROS.M16 17X 30X 3 U6592 ZN | WASHER | RONDELLE | SCHEIBE | |
| 15 | B00920516 | DADO M16X 1,5 D985 6S ZN | NUT M16X1,5 D985 6S ZN | ECROU | SELBSTSICHERNDE MUTTER M16-5S | |
| 16 | F01020264 | VITE M16X2X90 U5737 8.8ZN | SCR. M16X2X90 U5737 8.8ZN | VIS M16X2X90 5737 8.8 ZN | SCHRAUBE M16X2X90 5737 8.8 ZN | TORN. M16X2X90 5737 8.8 ZN |
| 17 | F01410100 | ROS.M16 17X 30X 3 U6592 ZN | WASHER | RONDELLE | SCHEIBE | |
| 18 | B00920516 | DADO M16X 1,5 D985 6S ZN | NUT M16X1,5 D985 6S ZN | ECROU | SELBSTSICHERNDE MUTTER M16-5S | |
| 19 | B00191680 | VITE M16X 2X 80 U5737 8.8ZN | SCREW | VIS | SCHRAUBE | |
| 20 | F01410100 | ROS.M16 17X 30X 3 U6592 ZN | WASHER | RONDELLE | SCHEIBE | |
| 21 | B00920516 | DADO M16X 1,5 D985 6S ZN | NUT M16X1,5 D985 6S ZN | ECROU | SELBSTSICHERNDE MUTTER M16-5S | |
| 22 | B0H400061 | KIT GUARNIZ. MARTIN. B0H400021 | KIT JOINTS FOR H400021 | KIT JOINTS POUR VERIN | DICHTUNGSSATZ FUER H400021 | |

# TAV_195

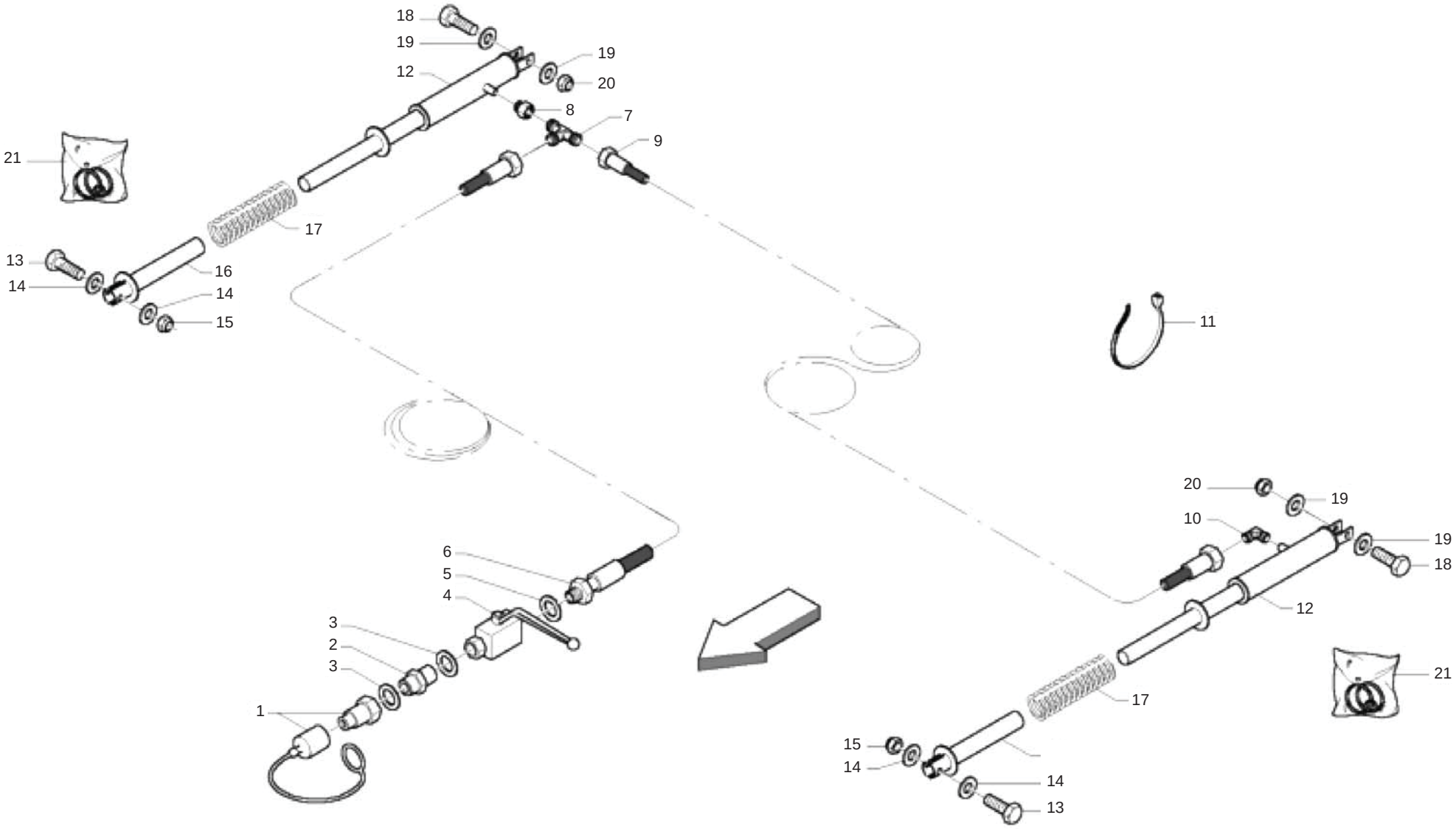




MASCHIO

cod. F07022223

# IMPIANTO IDRAULICO PICK-UP CUT
## *PICK-UP CUT HYDRAULIC TRANSMISSION*

TAV_195

| Pos. | Cod. | Descrizione | Description | Description | Benennung | Descripcion |
|---|---|---|---|---|---|---|
| 1 | B0H6000A0 | INNESTO RAP.NV 12GAS-M | QUICK CLUTCH | EMBRAYAGE | SCHNELLKUPPLUNG | |
| 2 | B0H733671 | NIPPLO RID.FORO 1MM. 1 2 -1 4 | NIPPLE 1 2 -1 4 | NIPPLE 1 MM 1 2 -1 4 | NIPPEL 1 2 -1 4 | |
| 3 | B01441415 | RONDELLA IN RAME 1 4 | WASHER | RONDELLE | BEILAGSCHEIBE 1 4 13X19X1,5 | |
| 4 | B0H000119 | RUBIN. A SFER.A.P.1 4 FEMM.-F | BALL COCK | ROBINET 1 4 FEMELLE | KUGELHAHN | |
| 5 | B01442015 | ROS. 21 X27X1,5 RAME -1 2 | WASHER | RONDELLE | BEILAGSCHEIBE 1 2 | |
| 6 | B0H000250 | TUBO IDRAUL. | HYDRAULIC HOSE | TUYAU HYDRAULIQUE | HYDRAULIKSCHLAUCH | |
| 7 | B0H000264 | RACCORDO T 10 TN96-10LR | T FITTING TN96-10LR | RACCORD T 10 | KUPPLUNG T 10 | |
| 8 | B0H000265 | RID. RASTELLI TN143-3 8 X1 4 R | REDUCTION TN143-3 8 X1 4 R | REDUCTION TN 143-3 8 X1 4 R | REDUKTION TN 143-3 8 | |
| 9 | B0H000251 | TUBO IDRAUL. | HYDRAULIC HOSE | TUYAU HYDRAULIQUE | HYDRAULIKSCHLAUCH | |
| 10 | B0H000086 | RACCORDO L 10 TN94-10LR | UNION L 10 | RACCORD L 10 | ANSCHLUSSSTUECK L 10 | |
| 11 | F05150055 | FASCETTA LUMEFIX 3,6X180 | CLAMP LUMEFIX | BANDE LUMEFIX | MANSCHETTE LUMEFIX | |
| 12 | B0H400072 | MARTINETTO PICK-UP | SPRINTER PICK-UP JACK CUT | VERIN PICK-UP | SPRINTER PICK-UP ZYLINDER CUT | |
| 13 | F01020256 | VITE M16X2X60 U5737 8.8ZN | SCR. M16X2X60 U5737 8.8ZN | VIS M16X 2X60 U5737 8.8 ZN | SCHRAUBE M16X2X60 U5737 8.8 ZN | TORNILLO M16X2X60 U5737 8.8 ZN |
| 14 | F01410100 | ROS.M16 17X 30X 3 U6592 ZN | WASHER | RONDELLE | SCHEIBE | |
| 15 | B00920516 | DADO M16X 1,5 D985 6S ZN | NUT M16X1,5 D985 6S ZN | ECROU | SELBSTSICHERNDE MUTTER M16-5S | |
| 16 | B07S01072 | GUIDA MARTINETTO | JACK GUIDE | GUIDE VERIN | ZYLINDERFUEHRUNG | |
| 17 | B01800062 | MOLLA PU TOPCUT | TOPCUT PICK-UP TINE | DENT PICK UP TOPCUT | TOPCUT PICK-UP FEDERZINKEN | |
| 18 | F01020256 | VITE M16X2X60 U5737 8.8ZN | SCR. M16X2X60 U5737 8.8ZN | VIS M16X 2X60 U5737 8.8 ZN | SCHRAUBE M16X2X60 U5737 8.8 ZN | TORNILLO M16X2X60 U5737 8.8 ZN |
| 19 | F01410100 | ROS.M16 17X 30X 3 U6592 ZN | WASHER | RONDELLE | SCHEIBE | |
| 20 | B00920516 | DADO M16X 1,5 D985 6S ZN | NUT M16X1,5 D985 6S ZN | ECROU | SELBSTSICHERNDE MUTTER M16-5S | |
| 21 | B0H400061 | KIT GUARNIZ. MARTIN. B0H400021 | KIT JOINTS FOR H400021 | KIT JOINTS POUR VERIN | DICHTUNGSSATZ FUER H400021 | |

# TAV_200

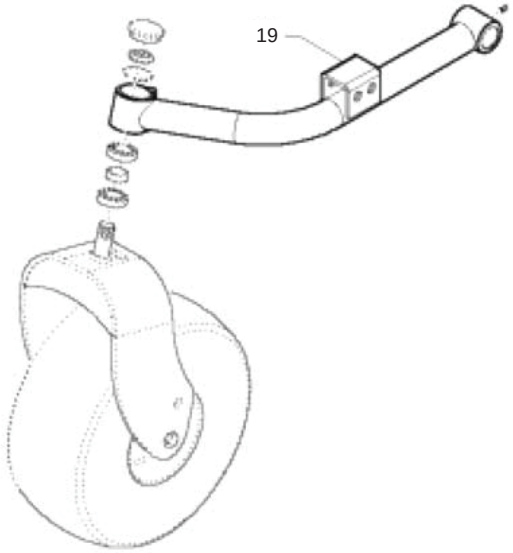

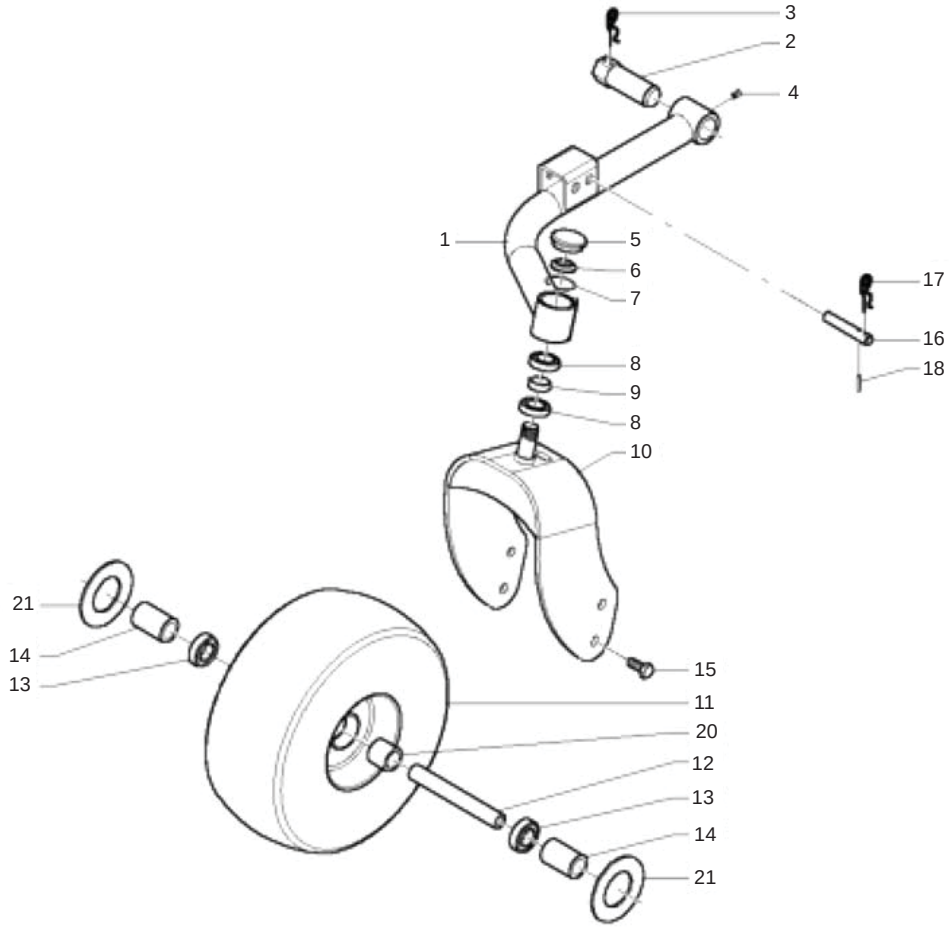

# RUOTE PICK-UP M
## *PICK-UP M WHEELS*

TAV_200

| Pos. | Cod. | Descrizione | Description | Description | Benennung | Descripcion |
|---|---|---|---|---|---|---|
| 1 | B07S01559 | BRACCIO RUOTA SX PU 200 | LEFT PICK-UP WHEEL ARM 200 | BRAS ROUE GAUCHE PU 200 | LINKER PICK-UP RADTRAEGERARM 2 | |
| 2 | B00500079 | SPINA BRACCI RUOTE | WHEEL ARM PIN | AXE BRAS ROUES | RADTRAEGERBOLZEN | |
| 3 | B011B0499 | SPINA A MOLLA A DOPPIO GIRO 4 | PIN | GOUPILLE CLIPS | ZAPFEN | |
| 4 | F01100013 | INGRAS HYDR M 6X1 90 | GREASE NIPPLE | GRAISSEUR HYDRAULIQUE | SCHMIERNIPPEL M6X1 90 | |
| 5 | B04400002 | CAP. CHIUSO 47X 8 TIPO C | CAP | COUVERCLE | SCHLIESSKAPPE | |
| 6 | B00941325 | GHIERA AU.GUK M25X1,5 T.4H ZN | RING NUT | RONDELLE | GEWINDERING M25X1,5 | |
| 7 | B01710047 | ANEL. D ARR. FORO 47-I UNI3654 | SEEGER RING | BAGUE SEEGER | SEEGERRING 47-I | |
| 8 | B02042512 | CUSC 6005-2RS CAT.B-ST004 | BEARING | ROULEMENT | LAGER | |
| 9 | B01300934 | DISTANZIALE 25,5X33,7X12 | SPACER | ENTRETOISE | DISTANZSTUCK 25,5X33,7X12 | |
| 10 | B07S01557 | SUPP. RUOTA | WHEEL SUPPORT | SUPPORT ROUE | RADHALTERUNG | |
| 11 | B07100045 | RUOTA IN GOMMA 16.650 X 8 | RUBBER WHEEL | ROUE EN CAOUTCHOUC | GUMMIRAD | |
| 12 | B01300336 | FUSELLO RUOTE PU | PICK-UP WHEELS SPINDLE | FUSEAU ROUES PU | ACHSCHENKEL R DER PICK-UP | |
| 13 | B02040005 | CUSCINETTO 6205-2RS CAT.BST004 | BEARING | ROULEMENT | LAGER | |
| 14 | B01301058 | DISTANZIALE 26X33.7X61.5 | SPACER | ENTRETOISE | DISTANSCHEIBE 26X33.7X61.5 | |
| 15 | F01020562 | VITE M16X2X30 U5739 8.8ZN | SCR. M16X2X30 U5739 8.8ZN | VIS M16X2X30 U5739 8.8 ZN | SCHRAUBE M16X2X30 U5739 8.8 ZN | TORNILLO M16X2X30 U5739 8.8 ZN |
| 16 | B01301065 | SPINA 16X95 2F 5 | PIN | GOUPILLE | STECKSTIFT 16X95 | |
| 17 | B011B0499 | SPINA A MOLLA A DOPPIO GIRO 4 | PIN | GOUPILLE CLIPS | ZAPFEN | |
| 18 | F02100086 | SPINA E.P. 5X 30 U6873 C70 ZN | PIN EL. 5 X30 DIN 1481 GALVAN. | FICHE EL. 5 X30 DIN 1481 ZN | SPANNSTIFT 5 X30 DIN 1481 ZN | CLAVIJA EL.5 X30 DIN 1481 ZN |
| 19 | B07S01555 | BRACCIO RUOTA DX PU 200 | RIGHT PICK-UP WHEEL ARM 200 | BRAS ROUE DROIT PU 200 | RECHTER PICK-UP RADTRAEGERARM | |
| 20 | B01300919 | DISTANZIALE 26X33.7X35.2 | SPACER | ENTRETOISE | ABSTANDSTUECK 26X33.7X35.2 | |
| 21 | B01300918 | FLANGIA PARAFIENO FORO 25 | DIAM. 25 HOLE FLANGE | BRIDE TROU DIAM. 25 | FLANSCH 25 | |

# TAV_205

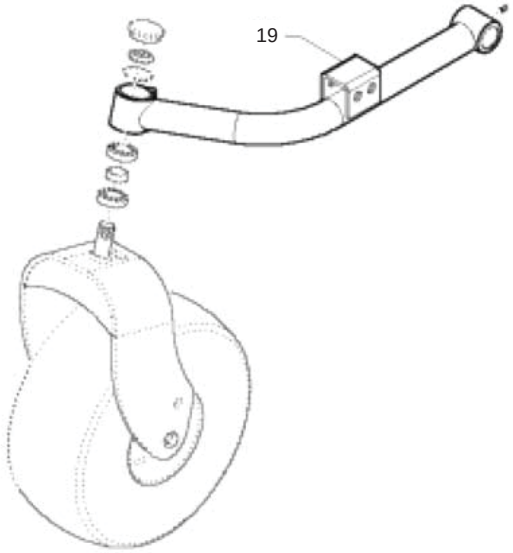

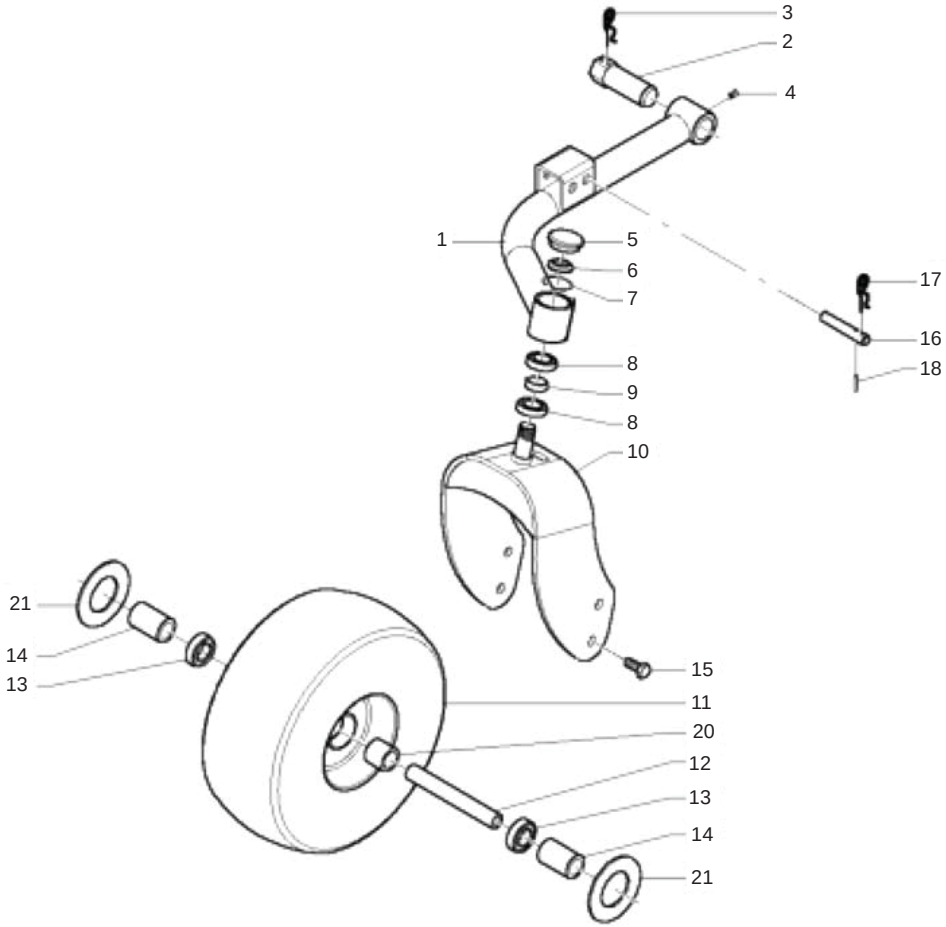

# RUOTE PICK-UP L
## *PICK-UP L WHEELS*

TAV_205

| Pos. | Cod. | Descrizione | Description | Description | Benennung | Descripcion |
|---|---|---|---|---|---|---|
| 1 | B07S01807 | BRACCIO RUOTA SX PU 220 | LEFT PICK-UP WHEEL ARM | BRAS ROUE GAUCHE PU 220 | LINKER PICK-UP RADTRAGERARM | |
| 2 | B00500079 | SPINA BRACCI RUOTE | WHEEL ARM PIN | AXE BRAS ROUES | RADTRAEGERBOLZEN | |
| 3 | B011B0499 | SPINA A MOLLA A DOPPIO GIRO 4 | PIN | GOUPILLE CLIPS | ZAPFEN | |
| 4 | F01100013 | INGRAS HYDR M 6X1 90 | GREASE NIPPLE | GRAISSEUR HYDRAULIQUE | SCHMIERNIPPEL M6X1 90 | |
| 5 | B04400002 | CAP. CHIUSO 47X 8 TIPO C | CAP | COUVERCLE | SCHLIESSKAPPE | |
| 6 | B00941325 | GHIERA AU.GUK M25X1,5 T.4H ZN | RING NUT | RONDELLE | GEWINDERING M25X1,5 | |
| 7 | B01710047 | ANEL. D ARR. FORO 47-I UNI3654 | SEEGER RING | BAGUE SEEGER | SEEGERRING 47-I | |
| 8 | B02042512 | CUSC 6005-2RS CAT.B-ST004 | BEARING | ROULEMENT | LAGER | |
| 9 | B01300934 | DISTANZIALE 25,5X33,7X12 | SPACER | ENTRETOISE | DISTANZSTUCK 25,5X33,7X12 | |
| 10 | B07S01557 | SUPP. RUOTA | WHEEL SUPPORT | SUPPORT ROUE | RADHALTERUNG | |
| 11 | B07100045 | RUOTA IN GOMMA 16.650 X 8 | RUBBER WHEEL | ROUE EN CAOUTCHOUC | GUMMIRAD | |
| 12 | B01300336 | FUSELLO RUOTE PU | PICK-UP WHEELS SPINDLE | FUSEAU ROUES PU | ACHSCHENKEL R DER PICK-UP | |
| 13 | B02040005 | CUSCINETTO 6205-2RS CAT.BST004 | BEARING | ROULEMENT | LAGER | |
| 14 | B01301058 | DISTANZIALE 26X33.7X61.5 | SPACER | ENTRETOISE | DISTANSCHEIBE 26X33.7X61.5 | |
| 15 | F01020562 | VITE M16X2X30 U5739 8.8ZN | SCR. M16X2X30 U5739 8.8ZN | VIS M16X2X30 U5739 8.8 ZN | SCHRAUBE M16X2X30 U5739 8.8 ZN | TORNILLO M16X2X30 U5739 8.8 ZN |
| 16 | B01301065 | SPINA 16X95 2F 5 | PIN | GOUPILLE | STECKSTIFT 16X95 | |
| 17 | B011B0499 | SPINA A MOLLA A DOPPIO GIRO 4 | PIN | GOUPILLE CLIPS | ZAPFEN | |
| 18 | F02100086 | SPINA E.P. 5X 30 U6873 C70 ZN | PIN EL. 5 X30 DIN 1481 GALVAN. | FICHE EL. 5 X30 DIN 1481 ZN | SPANNSTIFT 5 X30 DIN 1481 ZN | CLAVIJA EL.5 X30 DIN 1481 ZN |
| 19 | B07S01793 | BRACCIO RUOTA DX PU 220 | RIGHT PICK-UP WHEEL ARM 220 | BRAS ROUE DROIT PU220 | RECHTER PICK-UP RADTRAEGERARM | |
| 20 | B01300919 | DISTANZIALE 26X33.7X35.2 | SPACER | ENTRETOISE | ABSTANDSTUECK 26X33.7X35.2 | |
| 21 | B01300918 | FLANGIA PARAFIENO FORO 25 | DIAM. 25 HOLE FLANGE | BRIDE TROU DIAM. 25 | FLANSCH 25 | |

TAV_210

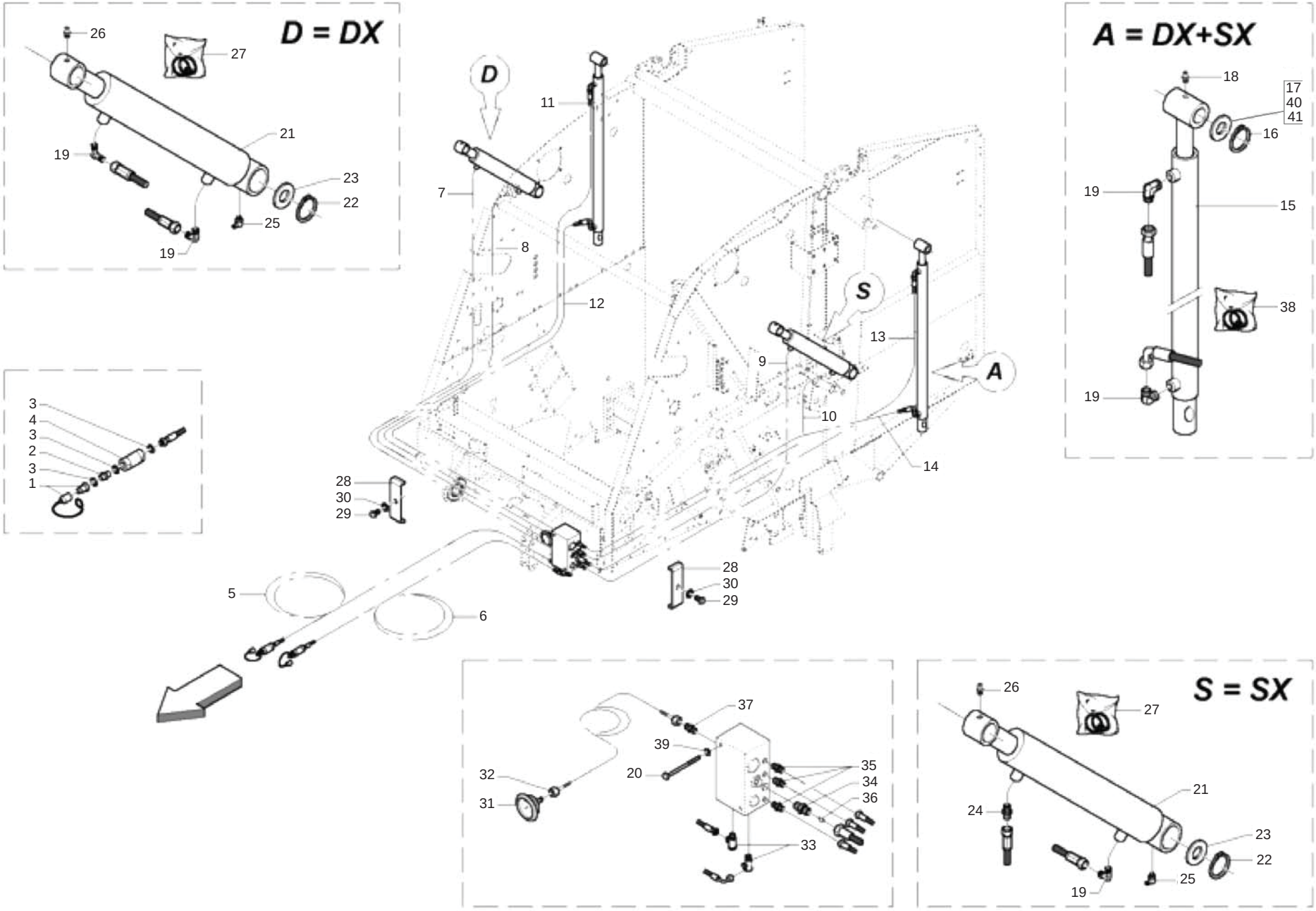
D = DX
26
27
21
19
23
22
25
19
D
11
7
8
12
S
13
9
A
10
14
28
30
29
28
30
29
5
6
3
4
3
2
3
1
A = DX+SX
18
17
40
41
16
19
15
38
19
37
39
32
20
35
34
36
31
33
S = SX
26
27
21
24
23
22
25
19

# IMPIANTO IDRAULICO MACCHINA
## *MACHINE HYDRAULIC SYSTEM*

TAV_210

| Pos. | Cod. | Descrizione | Description | Description | Benennung | Descripcion |
|---|---|---|---|---|---|---|
| 1 | B0H6000A0 | INNESTO RAP.NV 12GAS-M | QUICK CLUTCH | EMBRAYAGE | SCHNELLKUPPLUNG | |
| 2 | B0H6000AX | NIPPLO 1 2 | NIPPLE 1 2 | NIPPLE 1 2 | NIPPEL 1 2 | |
| 3 | B01442015 | ROS. 21 X27X1,5 RAME -1 2 | WASHER | RONDELLE | BEILAGSCHEIBE 1 2 | |
| 4 | B0H000040 | FILTRO IN LINEA 92400126X | FILTER IL12 60 R 94001261 | FILTRE EN LIGNE IL12 60 R94001 | FILTER IL12 60 R 94001261 | |
| 5 | B0H000253 | TUBO IDRAUL. | HYDRAULIC HOSE | TUYAU HYDRAULIQUE | HYDRAULIKSCHLAUCH | |
| 6 | B0H000254 | TUBO IDRAUL. | HYDRAULIC HOSE | TUYAU HYDRAULIQUE | HYDRAULIKSCHLAUCH | |
| 7 | B0H000248 | TUBO IDRAUL. AZZURRO | BLUE HYDRAULIC HOSE | TUYAU HYDRAULIQUE BLEU | BLAUER HYDRAULIKSCHLAUCH | |
| 8 | B0H000247 | TUBO IDRAUL. GIALLO | YELLOW HYDRAULIC HOSE | TUYAU HYDRAULIQUE JAUNE | GELBER HYDRAULIKSCHLAUCH | |
| 9 | B0H000249 | TUBO IDRAUL. AZZURRO | BLUE HYDRAULIC HOSE | TUYAU HYDRAULIQUE BLEU | BLAUER HYDRAULIKSCHLAUCH | |
| 10 | B0H000246 | TUBO IDRAUL. GIALLO | YELLOW HYDRAULIC HOSE | TUYAU HYDRAULIQUE JAUNE | GELBER HYDRAULIKSCHLAUCH | |
| 11 | B0H000243 | TUBO IDRAUL. NEUTRO | HYDRAULIC HOSE | TUYAU HYDRAULIQUE NEUTRE | HYDRAULIKSCHLAUCH | |
| 12 | B0H000244 | TUBO IDRAUL. ROSSO | RED HYDRAULIC HOSE | TUYAU HYDRAULIQUE ROUGE | ROTER HYDRAULIKSCHLAUCH | |
| 13 | B0H000242 | TUBO IDRAUL. NEUTRO | HYDRAULIC HOSE | TUYAU HYDRAULIQUE NEUTRE | HYDRAULIKSCHLAUCH | |
| 14 | B0H000245 | TUBO IDRAUL. ROSSO | RED HYDRAULIC HOSE | TUYAU HYDRAULIQUE ROUGE | ROTER HYDRAULIKSCHLAUCH | |
| 15 | B0H400130 | MARTINETTO PORTELLONE 265 | REAR DOOR JACK 265 | VERIN PORTE ARRIERE 265 | ZYLINDER TUER 265 | |
| 16 | F02050112 | ANEL. D ARR. ALB. 30-E UNI3653 | SEEGER RING | BAGUE SEEGER | SEEGERRING 30-E | |
| 17 | B01300153 | SPES. 30 40 2 ZINCATO | SHIM GALV | ENTRETOISE GALV | DISTANZSTUECK 30 40 2 | |
| 18 | B04200610 | INGRASS.A SFERE M6X1 LUNGO | GREASE NIPPLE | GRAISSEUR HYDRAULIQUE | GERADER SCHMIERNIPPEL M6X1 | |
| 19 | B0H000009 | RACC. L 10 SOLO COR RASTELLI | UNION ELBOW 10 | RACCORD L 10 SEULEMENT CORP | ANSCHLUSSSTUECK L 10 | |
| 20 | F01020051 | VITE M6X1X90 U5737 8.8ZN | SCR. M6X1X90 U5737 8.8ZN | VIS M6X 1X 90 U5737 8.8 ZN | SCHRAUBE M6X 1X90 U5737 8.8 ZN | TORNILLO M6X 1X90 U5737 8.8 ZN |
| 21 | B0H400128 | MARTINETTO PRESSIONE 265 | PRESSURE JACK 265 | VERIN PRESSION 265 | PRESSZYLINDER 265 | |
| 22 | B01700035 | ANEL. D ARR. ALB. 35-E UNI3653 | SEEGER RING | BAGUE SEEGER | SEEGERRING 35-E | |
| 23 | B01519696 | SPES. 35 47 1 | SHIM | ENTRETOISE | DISTANZSTUCK 35 50 1 | |
| 24 | B0H0P0006 | RACC. I 10 SOLO CORP. RASTELLI | CONNECTION | RACCORD | KUPPLUNG I 10 NUR KOERPER | |
| 25 | F01100013 | INGRAS HYDR M 6X1 90 | GREASE NIPPLE | GRAISSEUR HYDRAULIQUE | SCHMIERNIPPEL M6X1 90 | |
| 26 | B04200610 | INGRASS.A SFERE M6X1 LUNGO | GREASE NIPPLE | GRAISSEUR HYDRAULIQUE | GERADER SCHMIERNIPPEL M6X1 | |
| 27 | B0H400146 | KIT GUAR. MARTIN H400128-129- | SEAL KIT FOR H400128-129-134 | KIT JOINTS POUR H400128-129-13 | DICHTUNGSSATZ FUER H400128-129 | |
| 28 | B0C005132 | CAVALLOTTO DI FISSAGGIO | FIXING U BOLT | BOULON DE FIXAGE | U-BUEGEL | |
| 29 | F01020450 | VITE M8X1,25X40 U5739 8.8ZN | SCR. M8X1,25X40 U5739 8.8ZN | VIS M8X1,25X40 U5739 8.8ZN | SCHRA. M8X1,25X40 U5739 8.8ZN | TORN. M8X1,25X40 U5739 8.8ZN |
| 30 | F01410051 | ROS.M8 8,4X 17X1,6 U6592 ZN | WASHER M8 8,4X17X1,6 U6592 ZN | RONDELLE | SCHEIBE | |
| 31 | B0H000256 | MANOMETRO HT | GAUGE HT | MANOMETRE HT | MANOMETER HT | |
| 32 | B0H000255 | TUBO CAPILLARE MINITEST | CAPILLARY HOSE | TUYAU CAPILLAIRE MINITEST | KAPILLARROEHRCHEN | |
| 33 | B0H000103 | RACCORDO O 12 TN131-12LR | FILLET 0 12 | RACCORD O 12 | HOHLKEHLEN ANSCHLUSSSTUECK 0 | |
| 34 | B0H000182 | RACCORDO PER RIDUTT. DI FLUSSO | OIL FLOW REDUCER PIPE FITTING | RACCORD POUR REDUCTEUR DE FLUX | ANSCHLUSS FUER REDUKTIONS | |
| 35 | B0H000139 | RACCORDO I 10 RASTELLI | UNION I 10 | RACCORD I SEULEMENT CORPS | VERBINDUNGSTUECK I 10 | |
| 36 | B00500070 | GRANO M8 CON FORO 1,75MM | DOWEL M8 WITH HOLE 1.75MM | TOURILLON M8 AVEC TROU 1,75 MM | KORN MIT LOCH 1.75 MM | |
| 37 | B0H000140 | NIPPLO GIUNZ GAS CILIN.1 4-1 4 | NIPPLE 1 4-1 4 | NIPPLE JONCTION | NIPPEL 1 4-1 4 | |
| 38 | B0H400147 | KIT GUAR. MARTIN H400130-131- | SEAL KIT FOR H400130-131-135 | KIT JOINTS POUR H400130-131-13 | DICHTUNGSSATZ FUER H400130-131 | |
| 39 | F01420035 | ROS.M6 6,4X 18X1,6 U6593 ZN | WASHER | RONDELLE | SCHEIBE | |
| 40 | B01300100 | SPES. 30,3 40 0,5 ZINCATO | SHIM GALV | ENTRETOISE GALV | DISTANZSTUECK 30,3 40 0,5 | |
| 41 | B01300101 | SPES. 30,3 40 1 ZINCATO | SHIM GALV | ENTRETOISE GALV | DISTANZSTUECK 30,3 40 1 | |

TAV_215

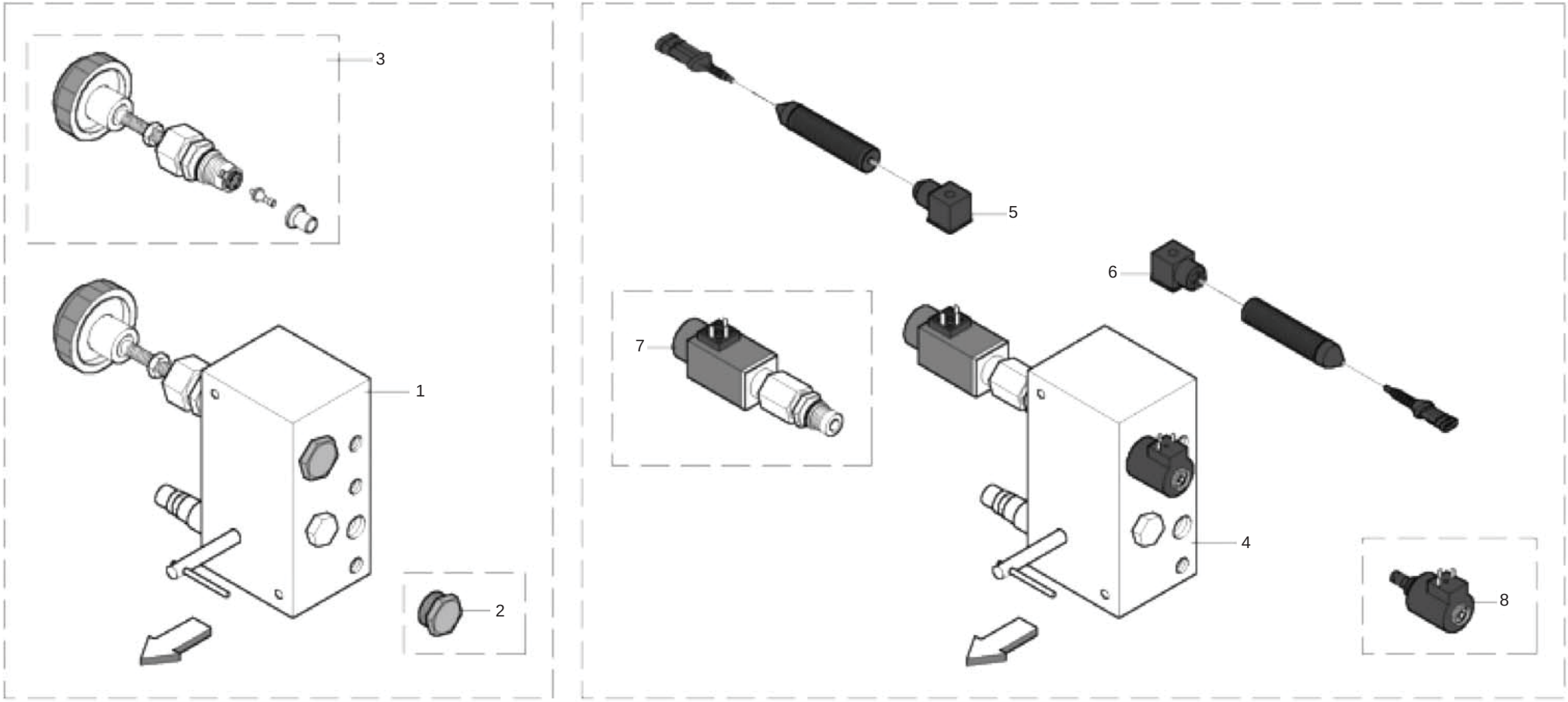

## VALVOLA GEOMETRIA-PRESSIONE (ELETTRONICA E MECCANICA)
## *GEOMETRY-PRESSURE VALVE (ELECTRONIC AND MECHANICAL)*

TAV_215

| Pos. | Cod. | Descrizione | Description | Description | Benennung | Descripcion |
|---|---|---|---|---|---|---|
| 1 | B0H0P0020 | VALVOLA MECCANICA EXT. SERIE 2 | VALVE FRB14 PM-GM | SOUPAPE FRB14 PM-GM | VENTIL FRB14 | |
| 2 | B0H000278 | TAPPO PER ALLOGGIAMENTO ON OFF | PLUG | BOUCHON POUR LOGEMENT ON OFF | PROPFEN FUER ON OFF | |
| 3 | B0H000277 | MANOPOLA TARATA PER B0H0P0020R | VMP5 TS.V SMERIGL.TARATA A 195 | VMP5 TS | VMP5 TS.V 195BAR | |
| 4 | B0H0P0021 | VALVOLA ELETTRON. EXT. SERIE 2 | VALVE | SOUPAPE | VENTIL FRB14 | |
| 5 | B0E0P0006 | MODULO PRESSIONE | PRESSURE MODULE | MODULE PRESSION | MODULE DRUCK | |
| 6 | B0E0P0007 | MODULO GEOMETRIE | GEOMETRIES MODULE | MODULE GEOMETRIES | MODULE GEOMETRIE | |
| 7 | B0H000279 | VALVOLA ELETT.IDR. GEOM.PRESS. | VALVE HYDRS | SOUPAPE HYDRAULIQUE | HYDRAULISCHE VANNE | |
| 8 | B0H000281 | VALVOLA IDRAULICA GEOM. PRESS | VALVE HYDRS ON OFF | SOUPAPE HYDRAULIQUE ON OFF | SPEZIELLE HYDRAULISCHE VANNE O | |

TAV_220

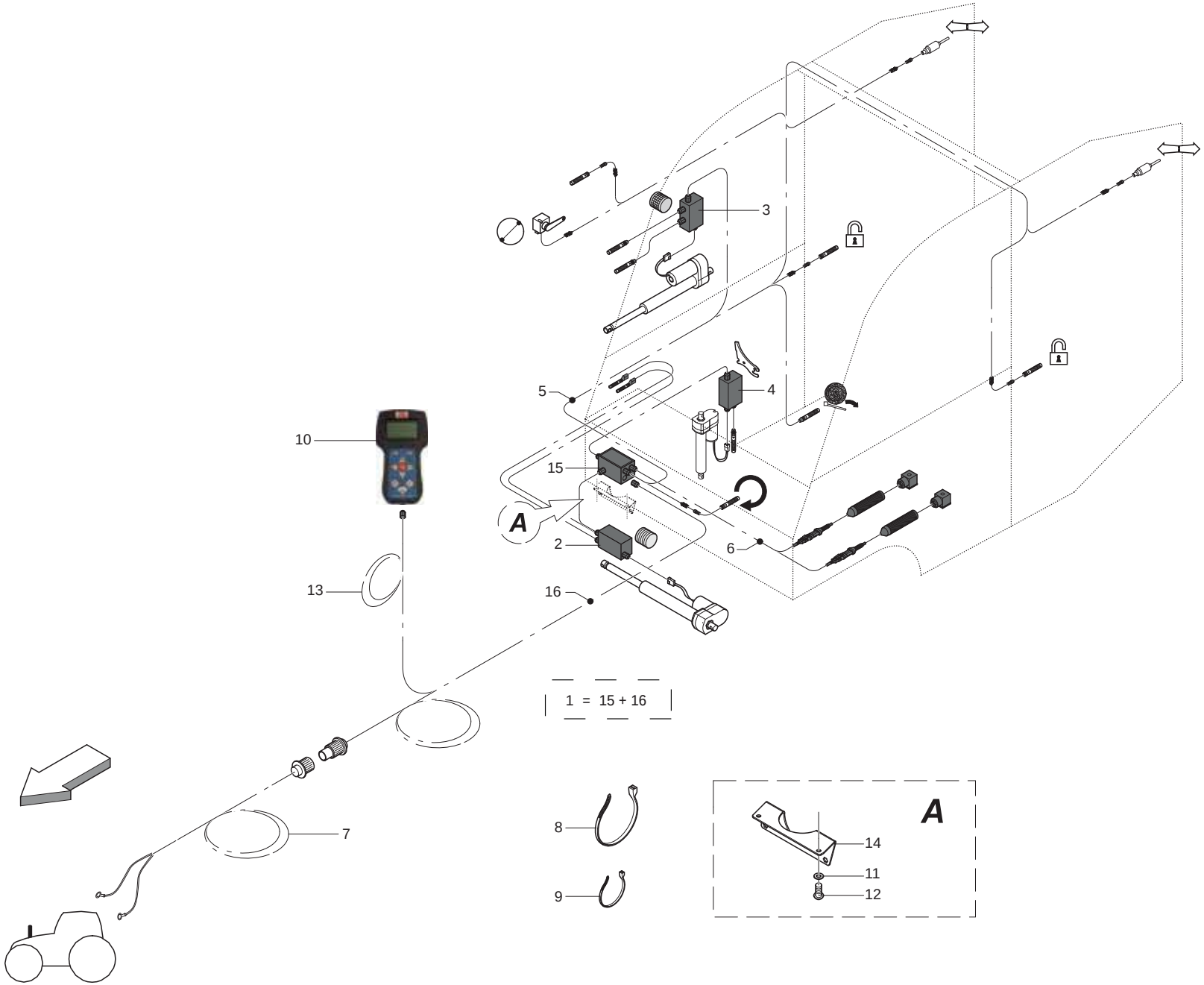




MASCHIO

cod. F07022223

# CABLAGGIO
## *CONTROL SYSTEM*

TAV_220

| Pos. | Cod. | Descrizione | Description | Description | Benennung | Descripcion |
|---|---|---|---|---|---|---|
| 1 | B0E0P0002 | MOD.POW.BOX CON CAVI | POWER BOX MODULE WITH CONNECTI | MODULE POWER BOX AVEC ATTEL. C | MODULE KONTROLLBOX | |
| 2 | B0E0P0003 | MOD.FILO COMPL.DI SENSORI M8 | TWINE MODULE COMPLETE WITH SEN | MODULE FICELLE COMPLET AVEC CA | MODULE GARN | |
| 3 | B0E0P0004 | MODULO RETE | NET MODULE WITH CONNECTION C6P | MODULE FILET AVEC ATTELAGE C6P | MODULE NETZ MIT ANSCHLUSS | |
| 4 | B0E0P0005 | MODULO CUT CON ATTACCO C6P0085 | CUT MODULE WITH CONNECTION C6P | MODULE CUT AVEC ATTELAGE C6P00 | MODULE CUT MIT ASCHLUSS | |
| 5 | B0E0P0072 | CABLAGGIO MACCHINA | BUS | BUS | BUS FUER HALL EFFEKT | |
| 6 | B0E0P0009 | CABLAGGIO BUS AUSILIARIO | AUXILIARY BUS | BUS AUXILIAIRE | BUS | |
| 7 | B0E0P0010 | CAVO TRATTORE | TRACTOR CABLE | CABLE TRACTEUR | KABEL SCHLEPPER | |
| 8 | F05150066 | FASCETTA SERRAC 8X2 L250MM MIN | CLAMP 8X2 | BANDE 8X2 | MANSCHETTE 8X2 | |
| 9 | F05150055 | FASCETTA LUMEFIX 3,6X180 | CLAMP LUMEFIX | BANDE LUMEFIX | MANSCHETTE LUMEFIX | |
| 10 | B0E0P0011 | CENTRALINA MACCH.EASY TRONIC | MACH.CONTROL UNIT EASY TRONIC | MODULE DISPLAY LT EASY TRONIC | MODULE EASY TRONIC | |
| 11 | F01410051 | ROS.M8 8,4X 17X1,6 U6592 ZN | WASHER M8 8,4X17X1,6 U6592 ZN | RONDELLE | SCHEIBE | |
| 12 | F01410051 | ROS.M8 8,4X 17X1,6 U6592 ZN | WASHER M8 8,4X17X1,6 U6592 ZN | RONDELLE | SCHEIBE | |
| 13 | B0E0P0065 | CABLAGGIO MACCHINA | TRACTOR MACHINE WIRING FOR POW | CABLAGE TRACTEUR | KABLE FUER TRAKTOR | |
| 14 | B0C6P0360 | SOSTEGNO MODULO A FILO | SUPPORT FORM WIRE | | | |
| 15 | B0E0P0066 | MOD.POW.BOX SENCA CAVI | DISPLAY WITH CARD SPRINTER EXT | DISPLAY WITH FICHE SPRINTER EX | KONTROLLBOX OHNE KABEL | |
| 16 | B0E0P0065 | CABLAGGIO MACCHINA | TRACTOR MACHINE WIRING FOR POW | CABLAGE TRACTEUR | KABLE FUER TRAKTOR | |

# TAV_225

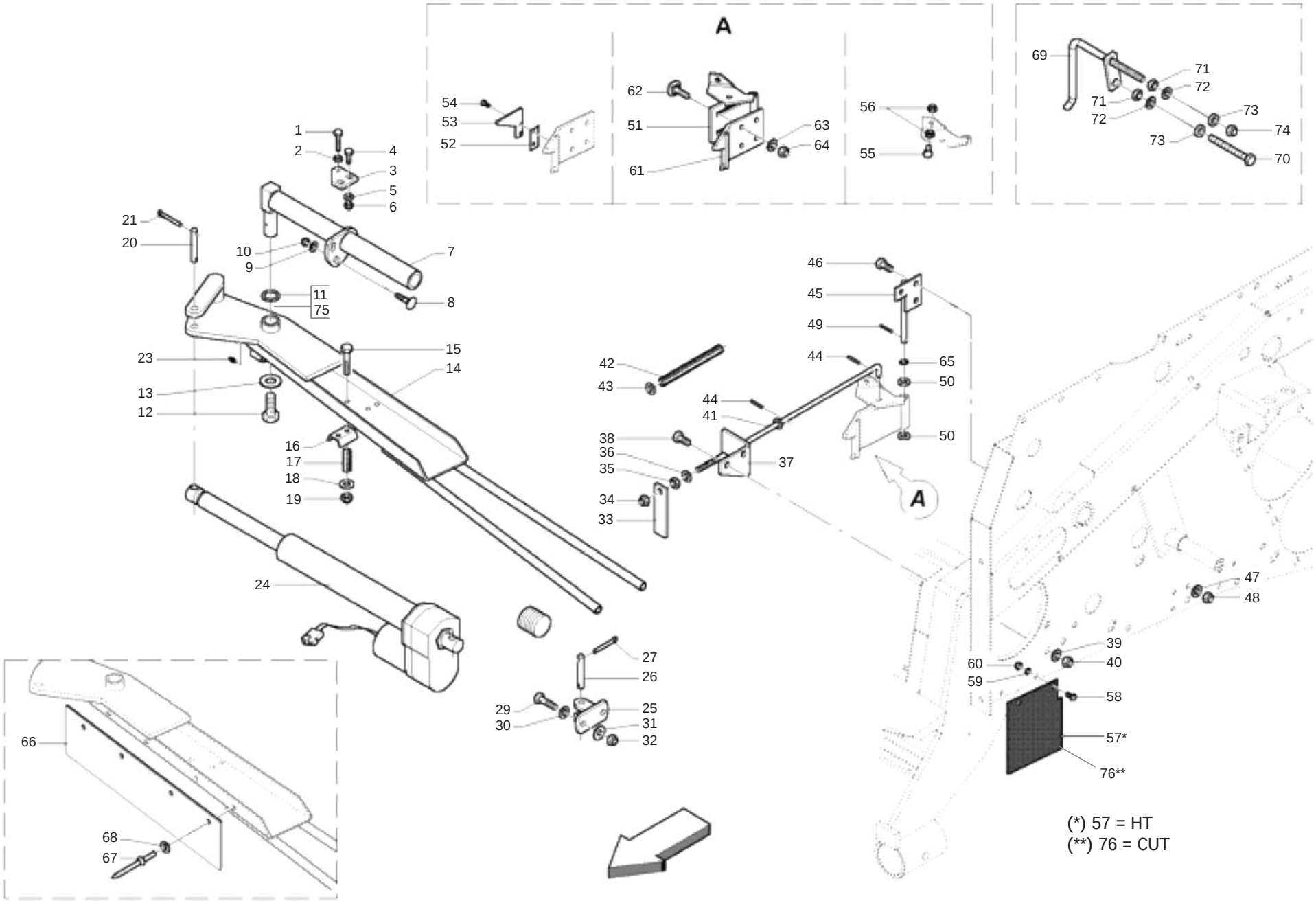


(*) 57 = HT
(**) 76 = CUT



MASCHIO

cod. F07022223

# LEGATORE FILO
## *TWINE BINDER*

TAV_225

| Pos. | Cod. | Descrizione | Description | Description | Benennung | Descripcion |
|---|---|---|---|---|---|---|
| 1 | F01020485 | VITE M10X1,5X50 U5739 8.8ZN | SCR. M10X1,5X50 U5739 8.8ZN | VIS M 10X50 | SCHRAUBE M 10X50 | TORNILLO M 10X50 |
| 2 | B00710310 | DADO M10X1,25 U5588 6S ZN | NUT | ECROU | MUTTER M10-6S | |
| 3 | B0C005031 | FERMO DI POSIZIONE | LOCK | ARRET | ARRETIERUNG | |
| 4 | B00181030 | VITE M10X1,5 X 30 U5739 8.8ZN | SCREW | VIS | SCHRAUBE | |
| 5 | F01410062 | ROS.M10 10,5X 18X 2 U6592 ZN | WASHER M10 10,5X 18X 2 U6592 | RONDELLE M10 10,5X18X2 ZN | DICHTUNGSRING M10 10,5X18X2 ZN | RONDANA M10 10,5X18X2 ZN |
| 6 | F01230202 | DADO M10X1,25 D985 8 ZN | SELF-LOCKING NUT | ECROU NYLSTOP | SELBSTSICHERNDE MUTTER M10-5S | |
| 7 | B07S01524 | TRAVERSA | CROSS BAR | TRAVERSE | QUERTRAEGER | |
| 8 | B00523421 | VITE SPECIALE TTQST M12X35-8.8 | SPECIAL SCREW | VIS SPCIALE | SCHRAUBE TTQST M12X 35-8.8 | |
| 9 | F01410076 | ROS.M12 13X 20X2,0 U1749 ZN | WASHER | RONDELLE | SCHEIBE | |
| 10 | B00920412 | DADO M12X1,75 D985 8 ZN | NUT | ECROU | SELBSTSICHERNDE MUTTER M12-5S | |
| 11 | B01300135 | SPES. 28 44 0,5 | SHIM | ENTRETOISE | DISTANZSTUECK 28 44 0,5 | |
| 12 | F01020562 | VITE M16X2X30 U5739 8.8ZN | SCR. M16X2X30 U5739 8.8ZN | VIS M16X2X30 U5739 8.8 ZN | SCHRAUBE M16X2X30 U5739 8.8 ZN | TORNILLO M16X2X30 U5739 8.8 ZN |
| 13 | B01519319 | RALLA 16X38X5 | FIFTH WHEEL | BUTEE | SCREIBE | |
| 14 | B07S01805 | BRACCIO LEGATORE FILO | TWINE WRAPPING ARM | BRAS LIAGE FICELLE | GARNDINDINGUNSARM | |
| 15 | F01020068 | VITE M8X1,25X40 U5737 8.8ZN | SCR. M8X1,25X40 U5737 8.8ZN | VIS M 8X1,25X40 U5737 8.8 ZN | SCHRA. M8X1,25X40 U5737 8.8 ZN | TORNIL.M8X1,25X40 U5737 8.8 ZN |
| 16 | B0C630434 | FRENA SPAGO | TWINE BRAKE | PINCE FICELLE | GARNBREMSE | |
| 17 | B01821993 | MOLLA | SPRING | RESSORT | FEDER | |
| 18 | F01410051 | ROS.M8 8,4X 17X1,6 U6592 ZN | WASHER M8 8,4X17X1,6 U6592 ZN | RONDELLE | SCHEIBE | |
| 19 | B00920208 | DADO M8X1 D985 8ZN | NUT M8X1 D985 8ZN | ECROU | SELBSTSICHERNDE MUTTER M8-5S | |
| 20 | B01A29508 | SPINA MARTINETTO | CYLINDER PIN | GOUPILLE VERIN | STIFT | |
| 21 | B01150430 | COPIGLIA 4X 30 U1336 ZN | GALV PIN | GOUPILLE GALV | SPLINT | |
| 23 | B04200610 | INGRASS.A SFERE M6X1 LUNGO | GREASE NIPPLE | GRAISSEUR HYDRAULIQUE | GERADER SCHMIERNIPPEL M6X1 | |
| 24 | B0E0P0087 | ATTUAT. LEGATORE FILO | ACTUATOR LINEAR | ACTIONNEUR | AKTUATOR | |
| 25 | B07S01525 | ATTACCO ATTUATORE | ACTUATOR ATTACHMENT | ATTELAGE ACTIONNEUR | HALTERUNG | |
| 26 | B01A29508 | SPINA MARTINETTO | CYLINDER PIN | GOUPILLE VERIN | STIFT | |
| 27 | B01150430 | COPIGLIA 4X 30 U1336 ZN | GALV PIN | GOUPILLE GALV | SPLINT | |
| 29 | F01020516 | VITE M12X1,75X45 U5739 8.8ZN | SCR. M12X1,75X45 U5739 8.8ZN | VIS M12X1,75X45 U5739 8.8 ZN | SCHARAUBE M12X1,75X45 U5739 ZN | TORNIL.M12X1,75X45 U5739 8.8ZN |
| 30 | F01410076 | ROS.M12 13X 20X2,0 U1749 ZN | WASHER | RONDELLE | SCHEIBE | |
| 31 | F01420120 | ROS.M12 13X 36X2,5 U6593 ZN | WASHER | RONDELLE | SCHEIBE | |
| 32 | B00920412 | DADO M12X1,75 D985 8 ZN | NUT | ECROU | SELBSTSICHERNDE MUTTER M12-5S | |
| 33 | B0C003115 | AGGANCIO TAGLIO | COUPLER | ACCROCHAGE COUPE | ANKOPPELUNGSVORRICHTUNG | |
| 34 | B00920208 | DADO M8X1 D985 8ZN | NUT M8X1 D985 8ZN | ECROU | SELBSTSICHERNDE MUTTER M8-5S | |
| 35 | B00710208 | DADO M 8X1,25 U5588 6.8 ZN | NUT | ECROU | MUTTER M8-6S | |
| 36 | F01410051 | ROS.M8 8,4X 17X1,6 U6592 ZN | WASHER M8 8,4X17X1,6 U6592 ZN | RONDELLE | SCHEIBE | |
| 37 | B0C005034 | SOSTEGNO ASTA | ROD SUPPORT | SUPPORT BARRE | STANGENSTUETZE | |
| 38 | F01020514 | VITE M12X1,75X40 U5739 8.8ZN | SCR. M12X1,75X40 U5739 8.8ZN | VIS M12X1,75X40 U5739 8.8ZN | SCHRA. M12X1,75X40 U5739 8.8ZN | TORN. M12X1,75X40 U5739 8,8ZN |
| 39 | F01410076 | ROS.M12 13X 20X2,0 U1749 ZN | WASHER | RONDELLE | SCHEIBE | |
| 40 | B00920412 | DADO M12X1,75 D985 8 ZN | NUT | ECROU | SELBSTSICHERNDE MUTTER M12-5S | |
| 41 | B00500098 | ASTA REGOLATRICE | ADJUSTMENT BAR | BARRE DE REGLAGE | REGELSTANGE | |
| 42 | B01800036 | MOLLA C FILO 1 L=203,5ZINCATA | C-SPRING | RESSORT C | C-FEDER | |
| 43 | F01410051 | ROS.M8 8,4X 17X1,6 U6592 ZN | WASHER M8 8,4X17X1,6 U6592 ZN | RONDELLE | SCHEIBE | |
| 44 | B01110320 | SPINA ELAST. 3X 20 SS DIN 1481 | PIN | GOUPILLE | STIFT | |
| 45 | B07S00987 | FULCRO LAMA | BLADE FULCRUM | POINT D APPUI LAME | KLINGENSCHWENKPUNKT | |
| 46 | F01020440 | VITE M8X1,25X25 U5739 8.8ZN | SCR. M8X1,25X25 U5739 8.8ZN | VIS M8X1,25X25 U5739 8.8 ZN | SCHRAUBE M8X1,25X25U5739 8.8ZN | TORNIL.M8X1,25X25 U5739 8.8 ZN |
| 47 | F01410051 | ROS.M8 8,4X 17X1,6 U6592 ZN | WASHER M8 8,4X17X1,6 U6592 ZN | RONDELLE | SCHEIBE | |
| 48 | B00920208 | DADO M8X1 D985 8ZN | NUT M8X1 D985 8ZN | ECROU | SELBSTSICHERNDE MUTTER M8-5S | |
| 49 | B01110320 | SPINA ELAST. 3X 20 SS DIN 1481 | PIN | GOUPILLE | STIFT | |
| 50 | F01410062 | ROS.M10 10,5X 18X 2 U6592 ZN | WASHER M10 10,5X 18X 2 U6592 | RONDELLE M10 10,5X18X2 ZN | DICHTUNGSRING M10 10,5X18X2 ZN | RONDANA M10 10,5X18X2 ZN |
| 51 | B07SP0044 | FULCRO DI TAGLIO | CUTTING FULCRUM | POINT D APPUI COUPE | SCHNEIDFULCRUM | |
| 52 | B07U00011 | LAMA FILO | BLADE BY MARTOR ART. 37 | LAME ETS. MARTOR ART. 37 | KLINGE MARTOR ART. 37 ABB. 533 | |
| 53 | B0C002765 | FISSAGGIO LAMA | BLADE FASTERNER | FIXAGE LAME | KLINGENHALTERUNG | |
| 54 | F01020378 | VITE M5X0,8X16 U5739 8.8ZN | SCR. M5X0,8X16 U5739 8.8ZN | VIS M5X0,8X16 U5739 8.8ZN | SCHRAUBE M5X0,8X16 U5739 8.8ZN | TORNILLO M5X0,8X16 U5739 8.8ZN |
| 55 | F01020440 | VITE M8X1,25X25 U5739 8.8ZN | SCR. M8X1,25X25 U5739 8.8ZN | VIS M8X1,25X25 U5739 8.8 ZN | SCHRAUBE M8X1,25X25U5739 8.8ZN | TORNIL.M8X1,25X25 U5739 8.8 ZN |
| 56 | B00710208 | DADO M 8X1,25 U5588 6.8 ZN | NUT | ECROU | MUTTER M8-6S | |
| 57 | B07V00080 | PROTEZ.LEG.FILO SPRINTER NEW | TWINE TYING KIT PROTECTION | PROTECTION LIAGE FICELLE SPRIN | GARNBINDUNGSSCHUTZ | |
| 58 | F01020436 | VITE M8X1,25X20 U5739 8.8ZN | SCR. M8X1,25X20 U5739 8.8ZN | VIS M8X1,25X 20 U5739 8.8 ZN | SCHRAUBE M8X1,25X20U5739 8.8ZN | TORN. M8X1,25X20 U5739 8.8 ZN |
| 59 | F01420048 | ROS.M8 8,4X 24X 2 U6593 ZN | WASHER | RONDELLE | SCHEIBE | |

# TAV_225

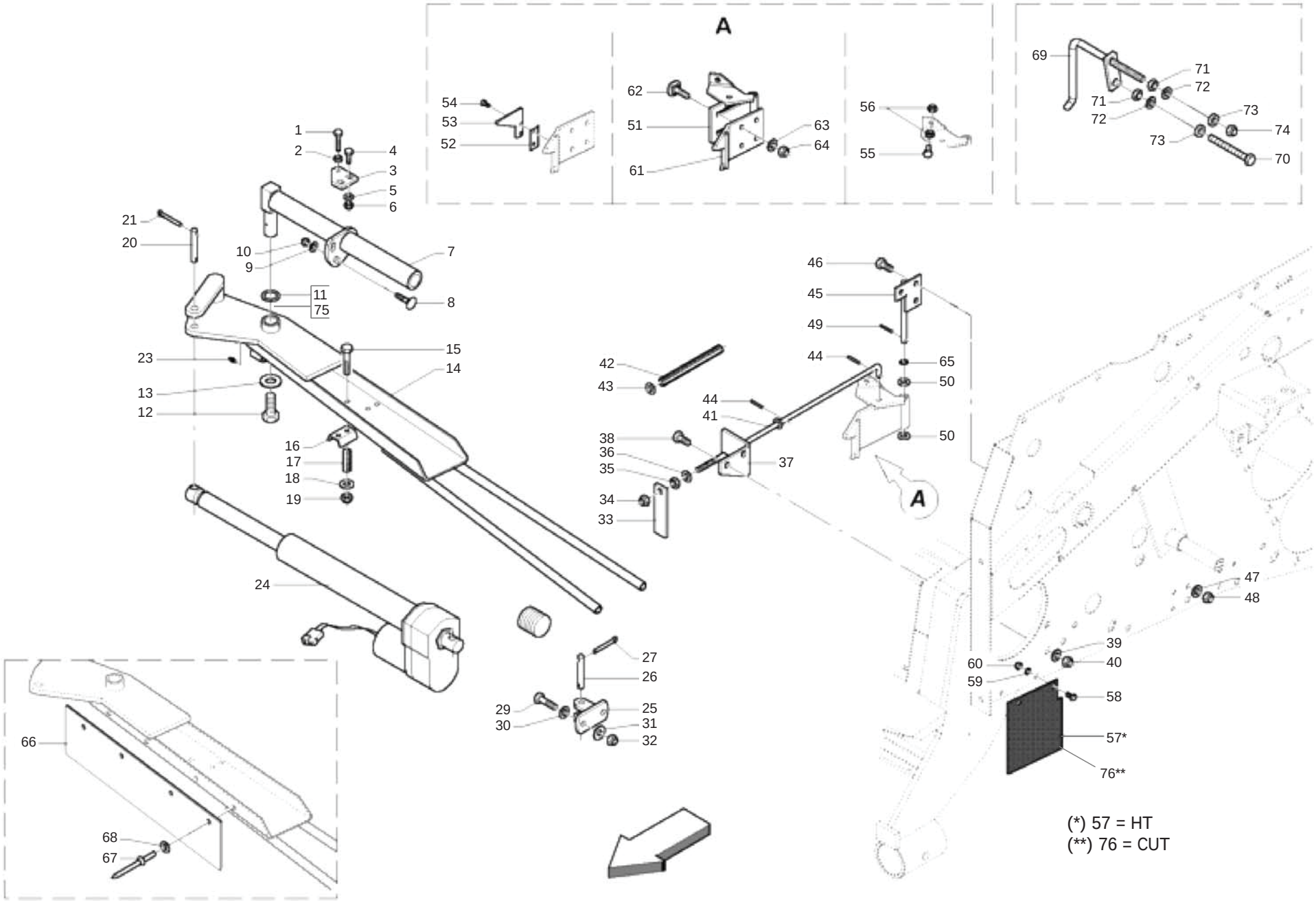




MASCHIO

cod. F07022223

# LEGATORE FILO
## *TWINE BINDER*

TAV_225

| Pos. | Cod. | Descrizione | Description | Description | Benennung | Descripcion |
|---|---|---|---|---|---|---|
| 60 | B00920208 | DADO M8X1 D985 8ZN | NUT M8X1 D985 8ZN | ECROU | SELBSTSICHERNDE MUTTER M8-5S | |
| 61 | B07SP0045 | PORTA LAMA | BLADE HOLDER | ATTELAGE LAME | KLINGEHALTER | |
| 62 | F01060202 | VITE M8X1,25X25 U5731 4.6ZN | SCR. M8X1,25X25 U5731 4.6ZN | VIS M8X1,25X25 U5731 4.6 | DUEBEL M8X1,25X25 U5731 4.6 ZN | TORNILLO M8X1,25X25 U5731 4.6 |
| 63 | F01410051 | ROS.M8 8,4X 17X1,6 U6592 ZN | WASHER M8 8,4X17X1,6 U6592 ZN | RONDELLE | SCHEIBE | |
| 64 | B00920208 | DADO M8X1 D985 8ZN | NUT M8X1 D985 8ZN | ECROU | SELBSTSICHERNDE MUTTER M8-5S | |
| 65 | B04313037 | ANELLO TORICO OR 3037 | TORIC RING | BAGUE TORIQUE OR 3037 | RING | |
| 66 | B07VP0004 | PROT. BRACCIO LEG.A FILO | TWINE WRAP ARM PROTECTION | PROTECTION BRAS | SCHUTZARM | |
| 67 | F02250137 | RIVETTO STR. 5 X20 U9200A AL | RIVET 5 X20 U9200A AL | | | |
| 68 | F01420023 | ROS.M5 5,3X 15X1,5 U6593 ZN | WASHER M5 5,3X 15X1,5 U6593 | | | |
| 69 | B07S01238 | DITO PRENDI FILO | TWINE GRASPER | DOIGT PRISE FICELLE | FINGEL FUER GARN | |
| 70 | F01020524 | VITE M12X1,75X90 U5739 8.8ZN | SCR. M12X1,75X90 U5739 8.8ZN | | | |
| 71 | F01200293 | DADO M12X1,75 U5588 CL8 ZN | NUT M12X1,75 U5588 6S ZN | ECROU M12X1,75 U5588 6S ZN | MUTTER M12X1,75 U5588 6S ZN | TUERCA M12X1,75 U5588 6S ZN |
| 72 | F01410076 | ROS.M12 13X 20X2,0 U1749 ZN | WASHER | RONDELLE | SCHEIBE | |
| 73 | B01516038 | RALLA 13 32 5 | FIFTH WHEEL | BUTEE | SCHEIBE | |
| 74 | B00920412 | DADO M12X1,75 D985 8 ZN | NUT | ECROU | SELBSTSICHERNDE MUTTER M12-5S | |
| 75 | B01300134 | SPESSORE 28 44 0.2 | SHIM 28 44 0.2 | | | |
| 76 | B07V00072 | PROT. IN GOMMA LAT. | SIDE RUBBERED PROTECTIONS | PROTECTION LATERALE EN CAOUT. | SEITER GUMMISCHUTZ | |

# TAV_230

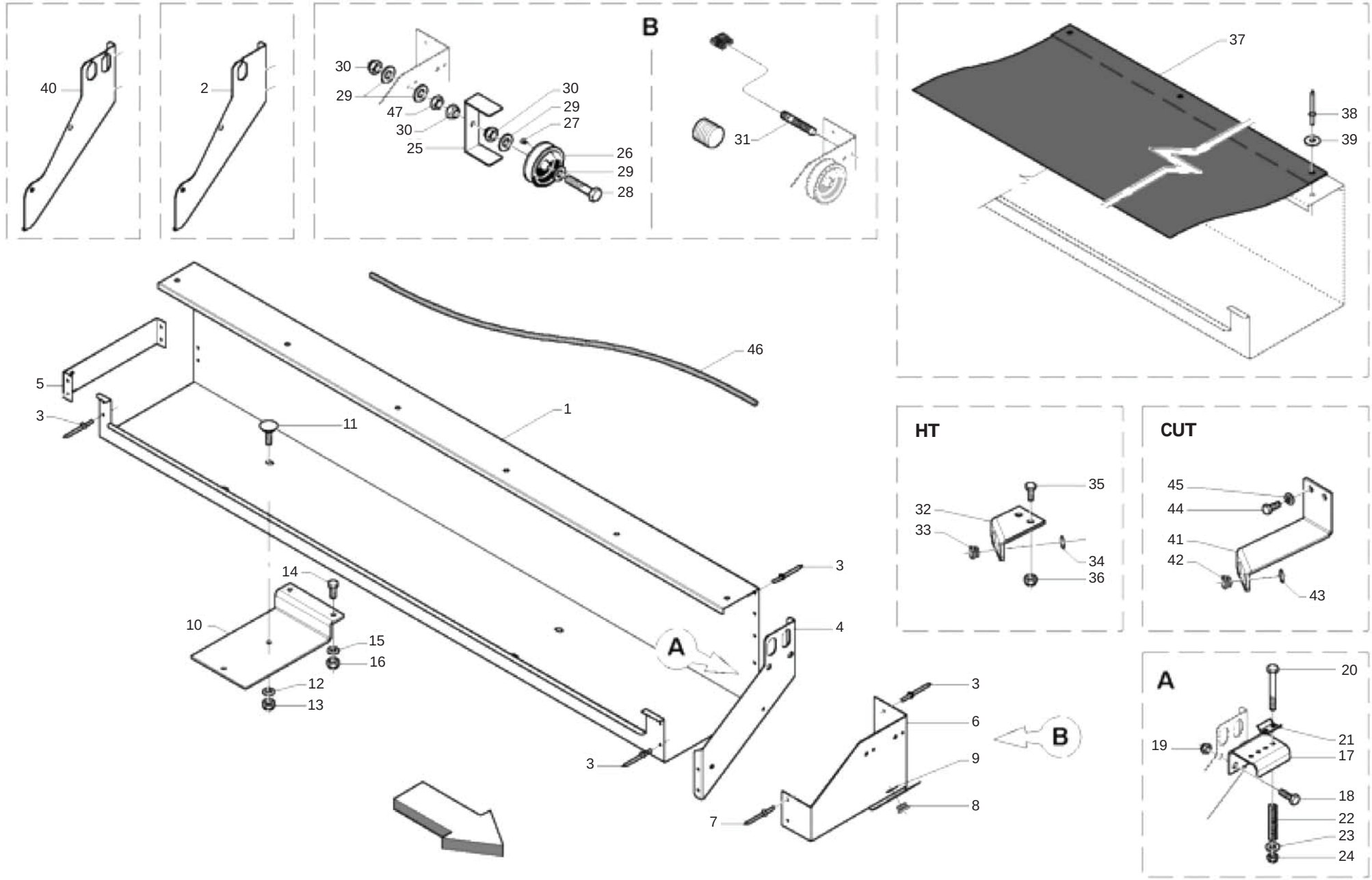




MASCHIO

cod. F07022223

# LEGATOER FILO: CASSONETTO
## *TWINE BINDER: TWINE BOX*

TAV_230

| Pos. | Cod. | Descrizione | Description | Description | Benennung | Descripcion |
|---|---|---|---|---|---|---|
| 1 | B0C3P0037 | CORPO CASSONE SPAGO | TWINE HOLDER BODY | CORPS BOITE A FICELLE | GEHAUSE DER BINDENGARNAUFBEWAH | |
| 2 | BC4P0038L | DIVISORE | SEPARATOR | | | |
| 3 | B01000010 | RIVETTO STR. 6X12 U9200A AL | RIVET | RIVET | ABREISSNIETEN 6X10 | |
| 4 | B0C4P0036 | DIVISORE | DIVIDER | | | |
| 5 | B0C3P0036 | FERMO TERMINALE | STOP TERMINAL | | | |
| 6 | B0C005016 | ATTACCO CARRUCOLE | PULLEY ATTACHMENT | ATTELAGE POULIE | ROLLEN BEFESTIGUNG | |
| 7 | B01000011 | RIVETTO STR. 6X12 U9200A AL | RIVET 6X12 U9200A AL | RIVET | ABREISSNIETEN 6X15 | |
| 8 | B03500097 | BUSSOLA PASSAGGIO SPAGO | TWINE GUIDE BUSH | DOUILLE PASSAGE FICELLE | SCHNURFUEHRUNGSBUCHSE | |
| 9 | F02050101 | ANEL. D ARR. ALB. 25-E UNI3653 | SEEGER RING | BAGUE SEEGER | SEEGERRING 25-E | |
| 10 | B0C004685 | SOSTEGNO CASSONE SPAGO | TWINE BOX HOLDER | SUPPORT RESERVOIR FICELLE | SCHNURKASTENHALTERUNG | |
| 11 | B00321020 | VITE M10X1,5 X 30 U5731 4.6ZN | SCREW | VIS | SCHRAUBE VERZINKT TTQST M10X20 | |
| 12 | F01420060 | ROS.M10 10,5X 30X2,5 U6593 ZN | WASHER | RONDELLE | SCHEIBE | |
| 13 | F01230202 | DADO M10X1,25 D985 8 ZN | SELF-LOCKING NUT | ECROU NYLSTOP | SELBSTSICHERNDE MUTTER M10-5S | |
| 14 | B00181030 | VITE M10X1,5 X 30 U5739 8.8ZN | SCREW | VIS | SCHRAUBE | |
| 15 | F01410062 | ROS.M10 10,5X 18X 2 U6592 ZN | WASHER M10 10,5X 18X 2 U6592 | RONDELLE M10 10,5X18X2 ZN | DICHTUNGSRING M10 10,5X18X2 ZN | RONDANA M10 10,5X18X2 ZN |
| 16 | F01230202 | DADO M10X1,25 D985 8 ZN | SELF-LOCKING NUT | ECROU NYLSTOP | SELBSTSICHERNDE MUTTER M10-5S | |
| 17 | B0C005012 | BASE FRENASPAGO | TWINE BRAKE BASE | BASE ARRET FICELLE | SCHNURBREMSENAUFLAGE | |
| 18 | F01020506 | VITE M12X1,75X20 U5739 8.8ZN | SCR. M12X1,75X20 U5739 8.8ZN | VIS M 12X20 | SCHRAUBE M 12X20 | TORNILLO M 12X20 |
| 19 | B00920412 | DADO M12X1,75 D985 8 ZN | NUT | ECROU | SELBSTSICHERNDE MUTTER M12-5S | |
| 20 | F01020068 | VITE M8X1,25X40 U5737 8.8ZN | SCR. M8X1,25X40 U5737 8.8ZN | VIS M 8X1,25X40 U5737 8.8 ZN | SCHRA. M8X1,25X40 U5737 8.8 ZN | TORNIL.M8X1,25X40 U5737 8.8 ZN |
| 21 | B0C630434 | FRENA SPAGO | TWINE BRAKE | PINCE FICELLE | GARNBREMSE | |
| 22 | B01821993 | MOLLA | SPRING | RESSORT | FEDER | |
| 23 | F01410051 | ROS.M8 8,4X 17X1,6 U6592 ZN | WASHER M8 8,4X17X1,6 U6592 ZN | RONDELLE | SCHEIBE | |
| 24 | B00920208 | DADO M8X1 D985 8ZN | NUT M8X1 D985 8ZN | ECROU | SELBSTSICHERNDE MUTTER M8-5S | |
| 25 | B0C230438 | FERMO | LOCK | ARRET | HALTER | |
| 26 | B03730455 | CARRUCOLA FILO RIF.333 60 | PULLEY | POULIE | LAUFROLLE | |
| 27 | B003F4813 | VITE AUTOF.T. 4,8X13 DIN798 | SCREW | VIS | SCHRAUBE | |
| 28 | B00180655 | VITE M6X1X 55 U5739 8.8ZN | SCREW | VIS | ZINKSCHRAUBE TE M6X55-8.8 UNI | |
| 29 | F01410037 | ROS.M6 6,4X12,5X1,6 U6592 ZN | WASHER | RONDELLE | BEILAGSCHEIBE 6 | |
| 30 | B00920106 | DADO M6X1 D985 8ZN | NUT | ECROU | SELBSTSICHERNDE MUTTER M6-5S | |
| 31 | B0E000102 | SENS. DI PROSSIMITA FILO | PROXIMITY SENSORS M8 | SENSEUR DE PROXIMITE | ABSTANDSMELDER | |
| 32 | B0C005385 | ATTACCO BOCCOLE PASSAFILO HT | BUSH COUPLING HT | ATTELAGE DOUILLES PASSE-FICELL | HUELSEANSCHLUSS | |
| 33 | B03500097 | BUSSOLA PASSAGGIO SPAGO | TWINE GUIDE BUSH | DOUILLE PASSAGE FICELLE | SCHNURFUEHRUNGSBUCHSE | |
| 34 | F02050101 | ANEL. D ARR. ALB. 25-E UNI3653 | SEEGER RING | BAGUE SEEGER | SEEGERRING 25-E | |
| 35 | F01020512 | VITE M12X1,75X35 U5739 8.8ZN | SCR. M12X1,75X35 U5739 8.8ZN | VIS M12X1,75X35 5739 8.8 ZN | SCHR. M12X1,75X35 5739 8.8 ZN | TORN. M12X1,75X35 5739 8.8 ZN |
| 36 | B00920412 | DADO M12X1,75 D985 8 ZN | NUT | ECROU | SELBSTSICHERNDE MUTTER M12-5S | |
| 37 | B07VP0002 | COPERT CASSONE SPAGO 265-280 | TWINE BOX COVER 265-280 | COUVERTURE GRANDE CAISSE 265-2 | DECKEL GARNGEHAUSE | |
| 38 | B01000010 | RIVETTO STR. 6X12 U9200A AL | RIVET | RIVET | ABREISSNIETEN 6X10 | |
| 39 | F01420035 | ROS.M6 6,4X 18X1,6 U6593 ZN | WASHER | RONDELLE | SCHEIBE | |
| 40 | BC4P0037L | DIVISORE | SEPARATOR | | | |
| 41 | B0C005002 | ATT. BOCCOLE PASSAFILO HTC-HTU | BUSH ATTACHMENT | ATTELAGE DOUILLE | BUCHSENBEFESTIGUNG | |
| 42 | B03500097 | BUSSOLA PASSAGGIO SPAGO | TWINE GUIDE BUSH | DOUILLE PASSAGE FICELLE | SCHNURFUEHRUNGSBUCHSE | |
| 43 | F02050101 | ANEL. D ARR. ALB. 25-E UNI3653 | SEEGER RING | BAGUE SEEGER | SEEGERRING 25-E | |
| 44 | F01020516 | VITE M12X1,75X45 U5739 8.8ZN | SCR. M12X1,75X45 U5739 8.8ZN | VIS M12X1,75X45 U5739 8.8 ZN | SCHARAUBE M12X1,75X45 U5739 ZN | TORNIL.M12X1,75X45 U5739 8.8ZN |
| 45 | F01410076 | ROS.M12 13X 20X2,0 U1749 ZN | WASHER | RONDELLE | SCHEIBE | |
| 46 | B07VP0012 | FUNE ELASTICA DIAM.6 - L=1720 | ROPE ELASTIC 6 L=1720 | | | |
| 47 | F01200232 | DADO M6X1 U5588 CL8 ZN | NUT M6X1 U5588 6.8ZN | ECROU 6 UNI 5588 6.8 ZN | MUTTER 6 UNI 5588 6.8 ZN | TUERCA 6 UNI 5588 6.8 ZN |

TAV_235

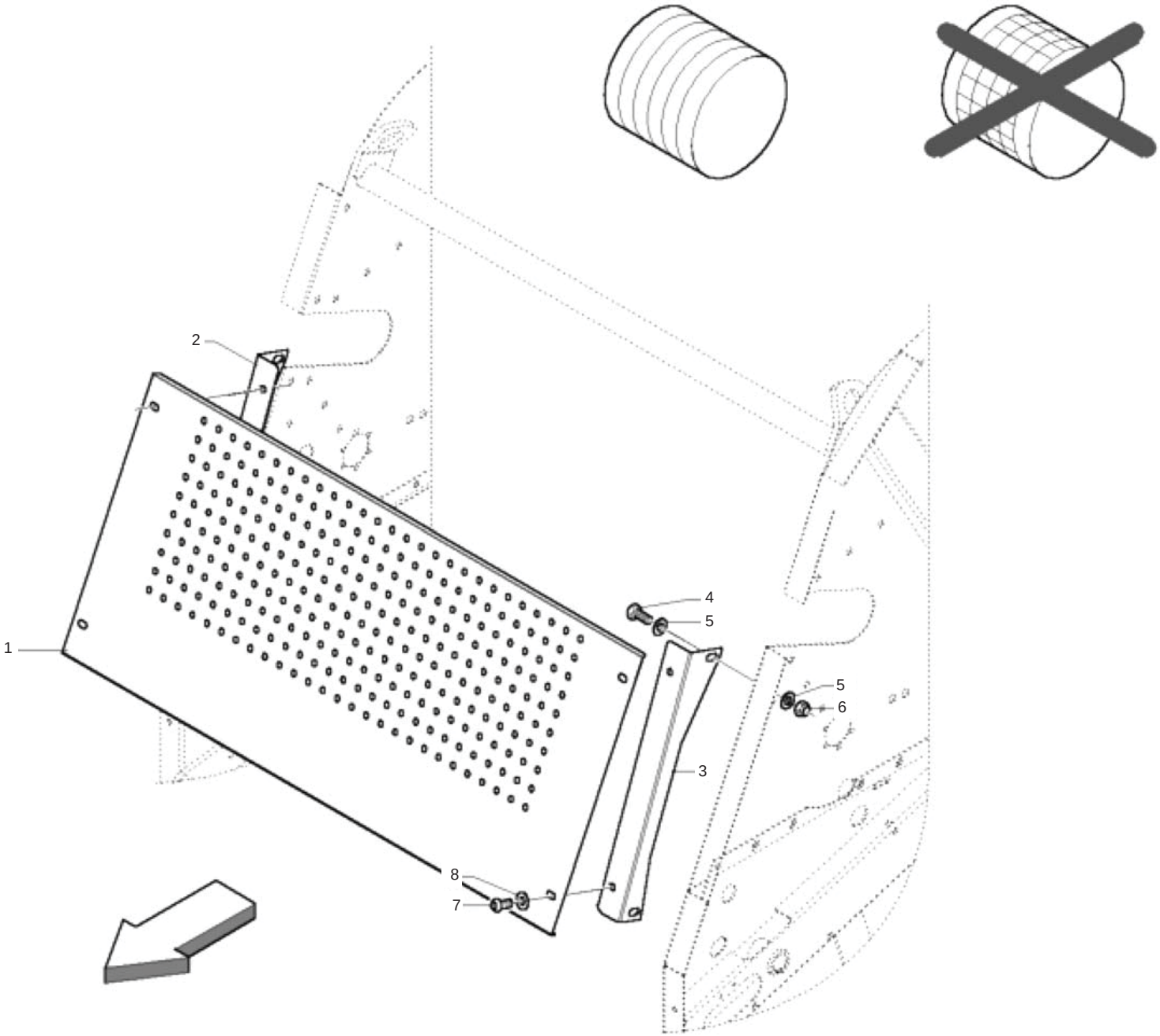

## CARTER ANTERIORE (SOLO CON LEGATORE FILO)
## *FRONT CARTER (ONLY WITH TWINE BINDER)*

TAV_235

| Pos. | Cod. | Descrizione | Description | Description | Benennung | Descripcion |
|---|---|---|---|---|---|---|
| 1 | B0C3P0009 | PROTEZIONE SOLO FILO | ONLY TWINE PROTECTION | PROTECTION SEULEMENT FICELLE | SCHUETZ NUR GARN | |
| 2 | B0C3P0007 | ATTACCO DX PROTEZIONE FILO | TWINE RIGHT PROTECTION ATTACHM | ATTELAGE DROIT PROTECTION FICE | ANSCHLUSS RECHT GARNSCHUETZ | |
| 3 | B0C3P0008 | ATTACCO SX PROTEZIONE FILO | TWINE LEFT PROTECTION ATTACHME | ATTELAGE GAUCHE PROTECTION FIC | ANSCHLUSS LINKS GARNSCHUETZ | |
| 4 | F01020508 | VITE M12X1,75X 25 U5739 8.8ZN | SCREW | VIS | SCHRAUBE | |
| 5 | F01410076 | ROS.M12 13X 20X2,0 U1749 ZN | WASHER | RONDELLE | SCHEIBE | |
| 6 | B00920412 | DADO M12X1,75 D985 8 ZN | NUT | ECROU | SELBSTSICHERNDE MUTTER M12-5S | |
| 7 | B00470825 | VITE TTEI M 8X 25-10,9 UNBRA | SCREW | VIS | SCHRAUBE TTEI M 8X25-10,9 UNBR | |
| 8 | F01420048 | ROS.M8 8,4X 24X 2 U6593 ZN | WASHER | RONDELLE | SCHEIBE | |

# TAV_240

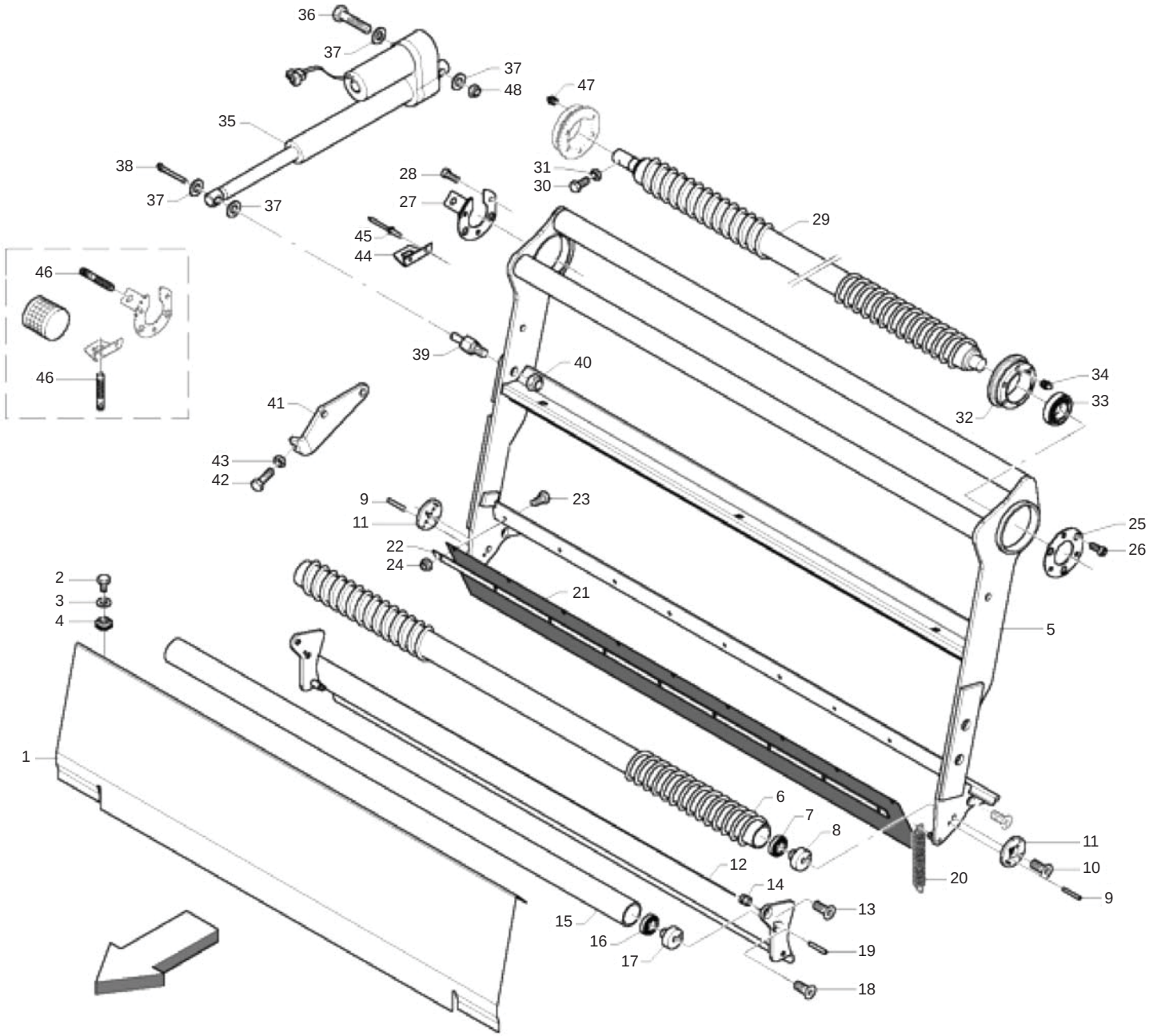




MASCHIO

cod. F07022223

# LEGATORE RETE (PARTE 1)
## *NET BINDER (PART 1)*

TAV_240

| Pos. | Cod. | Descrizione | Description | Description | Benennung | Descripcion |
|---|---|---|---|---|---|---|
| 1 | B0C3P0035 | PROT. PORTARETE | NET HOLDER PROTECTION | PROTECTION PORTE FILET | SCHUETZ NETZHALTER | |
| 2 | F01020432 | VITE M8X1,25X16 U5739 8.8ZN | SCR. M8X1,25X16 U5739 8.8ZN | VIS M8 X1,25X16 U5739 8.8 ZN | SCHRAUBE M8X1,25X16U5739 8.8ZN | TORNILLO M8X1,25X16U5739 8.8ZN |
| 3 | F01410051 | ROS.M8 8,4X 17X1,6 U6592 ZN | WASHER M8 8,4X17X1,6 U6592 ZN | RONDELLE | SCHEIBE | |
| 4 | B00990003 | DADO TIPO C 4808-BM8X1,25 | NUT | ECROU | MUTTER | |
| 5 | B07SP0090 | BRACCIO PORTARETE | NET HOLDER ARM | BRAS PORTE FILET | NETZHALTERARM | |
| 6 | B07S00648 | RULLO FOLLE RETE | IDLE ROLLER | ROULEAU FOU | UMLENKWALZE | |
| 7 | B02301716 | CUSC. 2203 E-2RS1TN9 RIF.SKF | BEARING | ROULEMENT | LAGER 2203 E-2RS1TN9 RIF. SKF | |
| 8 | B035P0008 | PERNO RULLO FOLLE NEW | NEW IDLE ROLLER PIN | TOURILLON ROULEAU FOU NEW | BOLZEN UMLENKWALZE | |
| 9 | F02100079 | SPINA E.P. 5X 20 U6873 C70 BR | PIN EL. 5X 20 U6873 C70 BR | | | |
| 10 | B00441025 | VITE TSPEI M10X 25-10.9 UNI59 | SCREW | VIS | SCHRAUBE VERZINKT TSPEI M10X25 | |
| 11 | B013P0128 | RALLA DI FERMO | STOP FIFTH WHEEL | EXCENTRIQUES | DISTANZSCHEIBE | |
| 12 | B07SP0286 | PINZA RETE | NET CLAMP | ETRIER FILET | NETZZANGE | |
| 13 | B00441020 | VITE TSPEI M10X 20-10.9 UNI 5 | SCREW | VIS | SCHRAUBE TSPEI M10X 20-10.9 | |
| 14 | B01300401 | BUSSOLA FILETTATA | PIN WITHOUT NET | DOUILLE FILETEE | NETZAUFNAHMEZANGENBOLZEN | |
| 15 | B07SP0100 | CORPO RULLO FOLLE LISCIO | SMOOTH IDLE ROLLER BODY | CORPS ROULEAU FOU LISSE | GEHAUSE DER GLATTLOSWALZE | |
| 16 | B02301716 | CUSC. 2203 E-2RS1TN9 RIF.SKF | BEARING | ROULEMENT | LAGER 2203 E-2RS1TN9 RIF. SKF | |
| 17 | B035P0008 | PERNO RULLO FOLLE NEW | NEW IDLE ROLLER PIN | TOURILLON ROULEAU FOU NEW | BOLZEN UMLENKWALZE | |
| 18 | B00441020 | VITE TSPEI M10X 20-10.9 UNI 5 | SCREW | VIS | SCHRAUBE TSPEI M10X 20-10.9 | |
| 19 | B01110612 | SPINA ELAST. 6X 12 SS DIN 1481 | PIN | GOUPILLE | STIFT | |
| 20 | B01800025 | MOLLA 2 13 98T GRUPPO RETE | SPRING | RESSORT | FEDER | |
| 21 | B07VP0001 | BANDELLA DI SOSTEGNO | SUPPORT BAND | BANDE DE SUPPORT | HALTERBANDE | |
| 22 | B0C2P0020 | PREMIGOMMA | RUBBER HOLDER | PRESSE-CAOUTCHOUC | GUMMIDRUCKER | |
| 23 | B00180620 | VITE M6X1X20 U5739 8.8ZN | SCREW | VIS | SCHRAUBE | |
| 24 | B00920106 | DADO M6X1 D985 8ZN | NUT | ECROU | SELBSTSICHERNDE MUTTER M6-5S | |
| 25 | B01300389 | FLANGIA DI CONTEGNO | FLANGE | FLASQUE | DICHTUNGSFLANSCH | |
| 26 | B00400825 | VITE M8X1,25X25 U5931 10.9ZD | SCREW | VIS | SCHRAUBE | |
| 27 | B0C004932 | PIASTRA RITEGNO | PLATE | PLAQUE | PLATTE | |
| 28 | B00400825 | VITE M8X1,25X25 U5931 10.9ZD | SCREW | VIS | SCHRAUBE | |
| 29 | B07S00649 | RULLO CONTARETE | NET COUNTER ROLLER | ROULEAU COMPTE-FILET | NETZZAHLERWALZE | |
| 30 | F01020380 | VITE M5X0,8X20 U5739 8.8ZN | SCR. M5X0,8X20 U5739 8.8ZN | VIS M5X0,8X20 U5739 8.8ZN | SCHRAUBE M5X0,8X20 U5739 8.8ZN | TORNILLO M5X0,8X20 U5739 8.8ZN |
| 31 | F01200220 | DADO M5X0,8 U5588 CL8 ZN | NUT M5X0,8 U5588 6.8ZN | ECROU 5 UNI 5588 6.8 ZN | MUTTER 5 UNI 5588 6.8 ZN | TUERCA 5 UNI 5588 6.8 ZN |
| 32 | B02700044 | SUPP BRAC PORTA RETE E RULLO | NET AND ROLLER ARM SUPPORT | SUPPORT BRAS PORTE-FILET ET RO | LAGER DES NETZTRAGERARMS UND W | |
| 33 | B02042517 | CUSC 6305-2RS CAT.B-ST004 | BEARING | ROULEMENT | LAGER 6305-2RS | |
| 34 | B04200820 | INGRAS HYDR M 8X1,25 DRIT | GREASE NIPPLE | GRAISSEUR HYDRAULIQUE | HYDRAUL. FETTBUECHSER M10X1,2 | |
| 35 | B0E000045 | ATTUATORE RETE | NET ACTUATOR | ACTIONNEUR WARNER D13-05B5-06 | AKTUATOR WARNER D13 05B506111 | |
| 36 | F01020164 | VITE M12X1,75X70 U5737 8.8ZN | SCREW M12X1,75X70 U5737 8.8ZN | VIS M12X1,75X70 U5737 8.8 ZN | SCHR. M12X1,75X70 U5737 8.8 ZN | TORN. M12X1,75X70 U5737 8.8 ZN |
| 37 | F01410076 | ROS.M12 13X 20X2,0 U1749 ZN | WASHER | RONDELLE | SCHEIBE | |
| 38 | F02200164 | COPIGLIA 3X 30 U1336 ZN | SPLIT PIN 3X 30 U1336 ZN | | | |
| 39 | B03500063 | PERNO ECCENTRICO | ECCENTRIC PIN | TOURILLON EXCENTRE | EXZENTERZAPFEN | |
| 40 | B00920516 | DADO M16X 1,5 D985 6S ZN | NUT M16X1,5 D985 6S ZN | ECROU | SELBSTSICHERNDE MUTTER M16-5S | |
| 41 | B0C4P0009 | FERMO | LOCK | ARRET | BLOCK | |
| 42 | F01020517 | VITE M12X1,75X 50 U5739 8.8ZN | SCREW | VIS | SCHRAUBE | |
| 43 | F01200293 | DADO M12X1,75 U5588 CL8 ZN | NUT M12X1,75 U5588 6S ZN | ECROU M12X1,75 U5588 6S ZN | MUTTER M12X1,75 U5588 6S ZN | TUERCA M12X1,75 U5588 6S ZN |
| 44 | B0C005200 | ATTACCO SENSORE RETE | NET SENSOR COUPLING | ATTELAGE CAPTEUR FILET | SENSORANSCHLUSS | |
| 45 | B01000013 | RIVETTO STR. 5X18 U9200A AL | RIVET | RIVET | ABREISSNIETEN 6X18 | |
| 46 | B0E000056 | SENSORE PROSSIMITA BALLA M12 | PROXIMITY SENSOR | CAPTEUR DE PROXIMITE | ABSTANDSMELDER | |
| 47 | B04200820 | INGRAS HYDR M 8X1,25 DRIT | GREASE NIPPLE | GRAISSEUR HYDRAULIQUE | HYDRAUL. FETTBUECHSER M10X1,2 | |
| 48 | B00920412 | DADO M12X1,75 D985 8 ZN | NUT | ECROU | SELBSTSICHERNDE MUTTER M12-5S | |

TAV_245

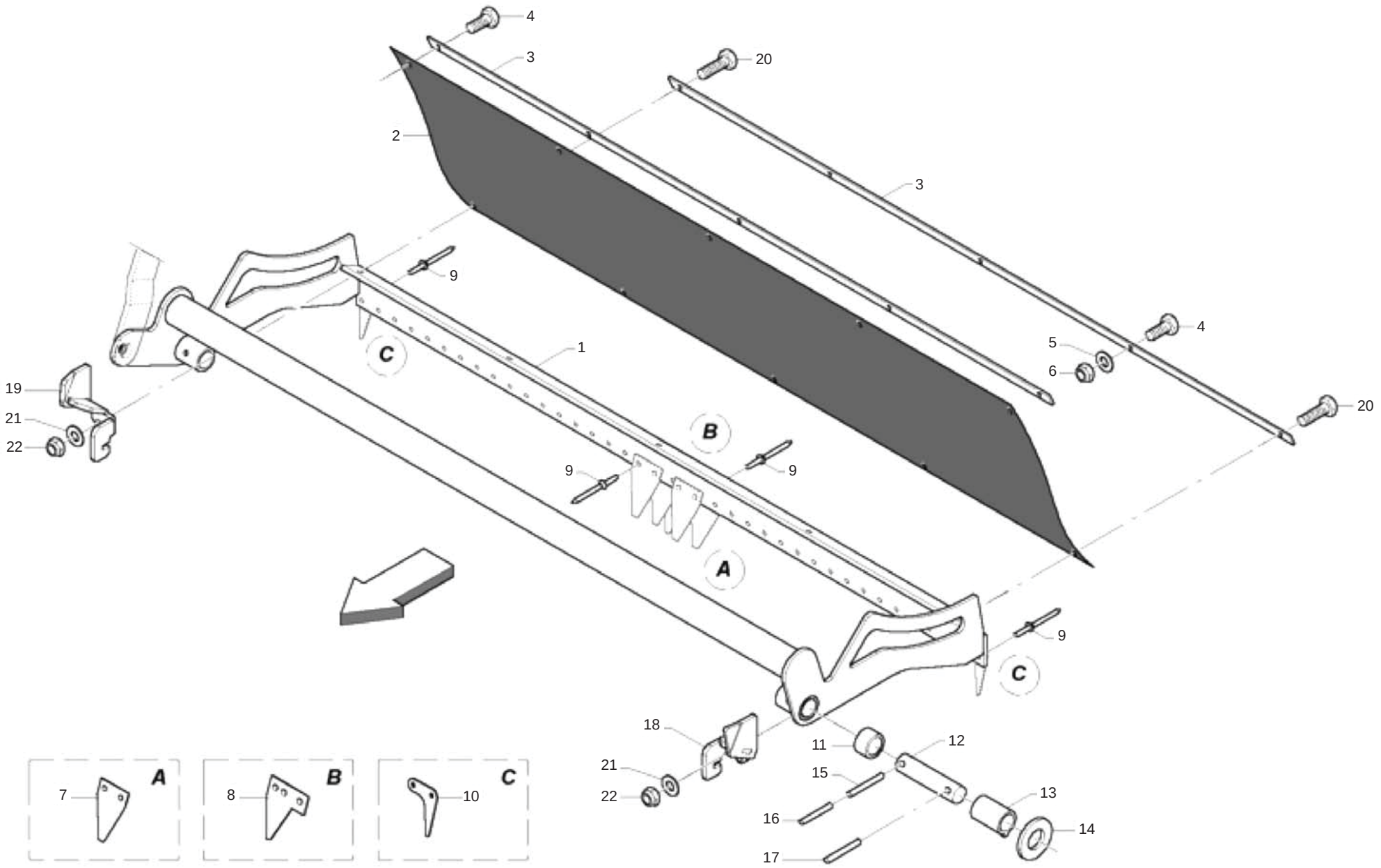
4
3
20
2
3
9
4
5
6
1
C
19
21
22
20
B
9
9
A
9
C
18
11
12
21
15
22
13
16
14
17
A
7
B
8
C
10

# LEGATORE RETE (PARTE 2)
## *NET BINDER (PART 2)*

TAV_245

| Pos. | Cod. | Descrizione | Description | Description | Benennung | Descripcion |
|---|---|---|---|---|---|---|
| 1 | B07SP0279 | BRACCIO LAMA | KNIVE HARM | BRAS COUTEAUX | KLINGEARM | |
| 2 | B07VP0010 | CHIUSURA IN TELA PER LAMA | CLOTH CLOSURE FOR BLADE | FERMETURE EN TOILE POUR LAME | VERSCHLUSS AUS TUCH FUER KLING | |
| 3 | B0C002398 | PREMIGOMMA | RUBBERHOLDER | PRESSE-PNEU | GUMMIHALTERLEISTE | |
| 4 | B00180620 | VITE M6X1X20 U5739 8.8ZN | SCREW | VIS | SCHRAUBE | |
| 5 | F01410037 | ROS.M6 6,4X12,5X1,6 U6592 ZN | WASHER | RONDELLE | BEILAGSCHEIBE 6 | |
| 6 | B00920106 | DADO M6X1 D985 8ZN | NUT | ECROU | SELBSTSICHERNDE MUTTER M6-5S | |
| 7 | B07U00012 | LAMINO RASSPE D200 LISCIA | PLATE RASPE D200 | | | |
| 8 | B0C6P0334 | COMPENSO LAMINI SU BRACCIO LAM | SHIM | EPAISSEUR | DICHTUNG | |
| 9 | B01000013 | RIVETTO STR. 5X18 U9200A AL | RIVET | RIVET | ABREISSNIETEN 6X18 | |
| 10 | B0C6P0532 | TERMINALE LAMA | TERMINALE LAMA. | | | |
| 11 | B013C0012 | DISTANZIALE 25.5X33.7X20 | SPACER | ENTRETOISE | DISTANZSTUECK | |
| 12 | B01300390 | SPINA SX BRACCIO TAGLIA RETE | ARM LEFT PIN | EPINE GAUCHE BRAS COUPE-FILET | LINKER NETZSCHNEIDEVORRICHTUNG | |
| 13 | B02526852 | BUSSOLA NYLON | NYLON BUSH | GALET | BUCHSE | |
| 14 | B01522663 | SPES. 25 45 | SHIM | ENTRETOISE | SCHEIBE | |
| 15 | F02100090 | SPINA E.P. 5X 40 U6873 C70 BR | ELASTIC PIN 5X40 | GOUJON ELASTIQUE 5X40 | SPANNHUELSE 5X40 | ESPINA ELASTICA 5X40 |
| 16 | F02100142 | SPINA E.P. 8X 40 U6873 C70 BR | ELASTIC PIN 8X40 | GOUJON ELASTIQUE 8X40 | SPANNHUELSE 8X40 | ESPINA ELASTICA 8X40 |
| 17 | F02100142 | SPINA E.P. 8X 40 U6873 C70 BR | ELASTIC PIN 8X40 | GOUJON ELASTIQUE 8X40 | SPANNHUELSE 8X40 | ESPINA ELASTICA 8X40 |
| 18 | B07SP0245 | FERMO DESTRO ALZO | RIGH STOP | ARRET DROIT | BLOCK RECHTS | |
| 19 | B07SP0246 | FERMO SINISTRO ALZO | LEFT STOP | ARRET GAUCHE | BLOCK LINKS | |
| 20 | F01020408 | VITE M6X1X30 U5739 8.8ZN | SCR. M6X1X30 U5739 8.8ZN | VIS M 6X1X30 | SCHRAUBE M 6X1X30 | TORNILLO M 6X1X30 |
| 21 | F01410037 | ROS.M6 6,4X12,5X1,6 U6592 ZN | WASHER | RONDELLE | BEILAGSCHEIBE 6 | |
| 22 | B00920106 | DADO M6X1 D985 8ZN | NUT | ECROU | SELBSTSICHERNDE MUTTER M6-5S | |

TAV_250

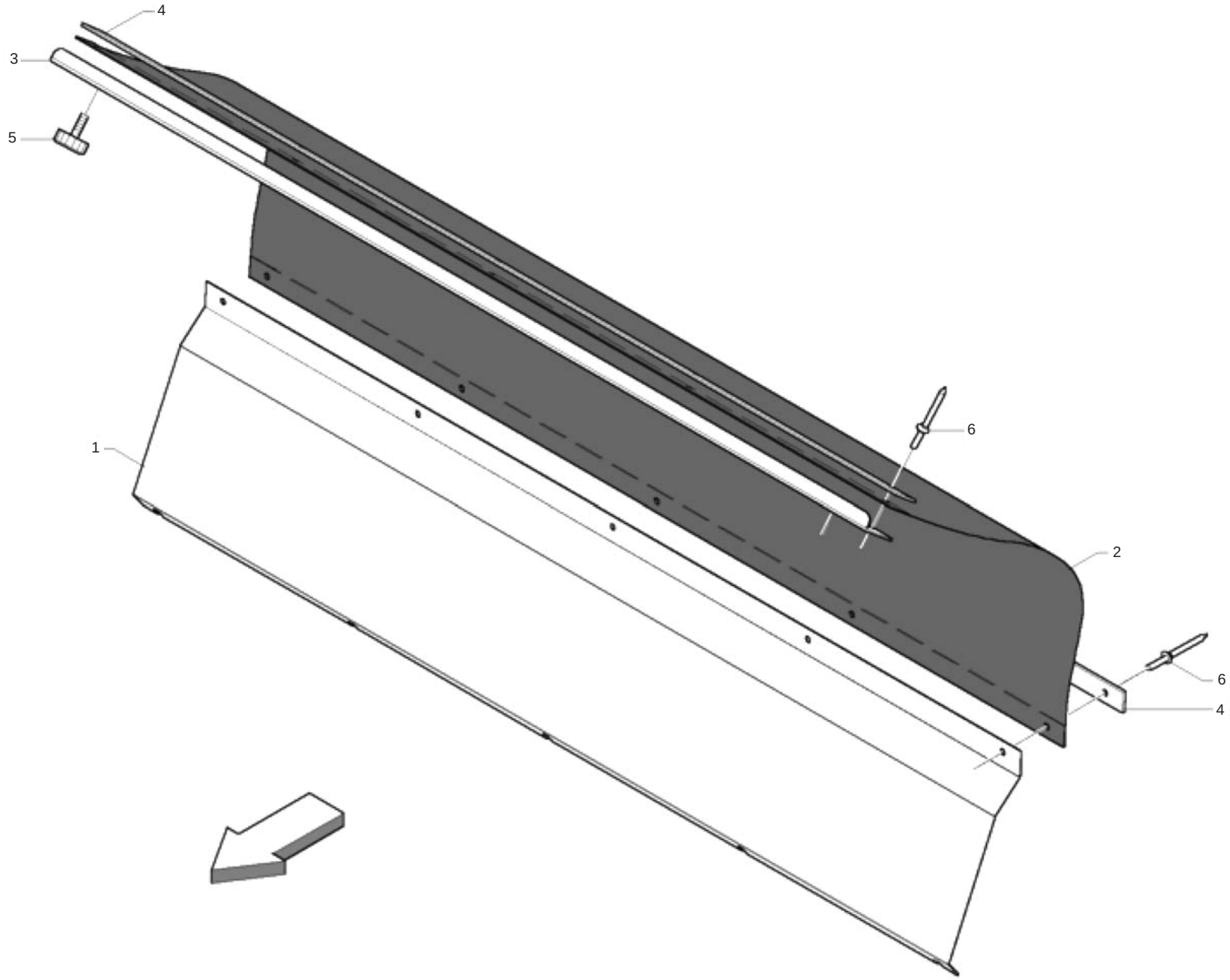

# LEGATORE RETE (PARTE 3)
## *NETE BINDER (PART 3)*

TAV_250

| Pos. | Cod. | Descrizione | Description | Description | Benennung | Descripcion |
|---|---|---|---|---|---|---|
| 1 | B0C2P0030 | PROT. INFERIORE | LOWER PROTECTION | PROTECTION INFERIEURE | SCHUETZ UNTEN | |
| 2 | B07V00062 | CHIUSURA IN GOMMA | RUBBER CLOSING | FERMETURE EN CAOUTCHOUC | GUMMIVERSCHLUSS | |
| 3 | B07MP0017 | SOSTEGNO PROT. | PROTECTION SUPPORT | SUPPORT PROTECTION | SCHTZHALTER | |
| 4 | B0C002398 | PREMIGOMMA | RUBBERHOLDER | PRESSE-PNEU | GUMMIHALTERLEISTE | |
| 5 | B07V00106 | VOLANTINO M8X15 DIAM. 30 | KNOB WHEEL | VOLAN M 8 DIAM. 30X19 | HANDRAD | |
| 6 | B01000010 | RIVETTO STR. 6X12 U9200A AL | RIVET | RIVET | ABREISSNIETEN 6X10 | |

# TAV_255

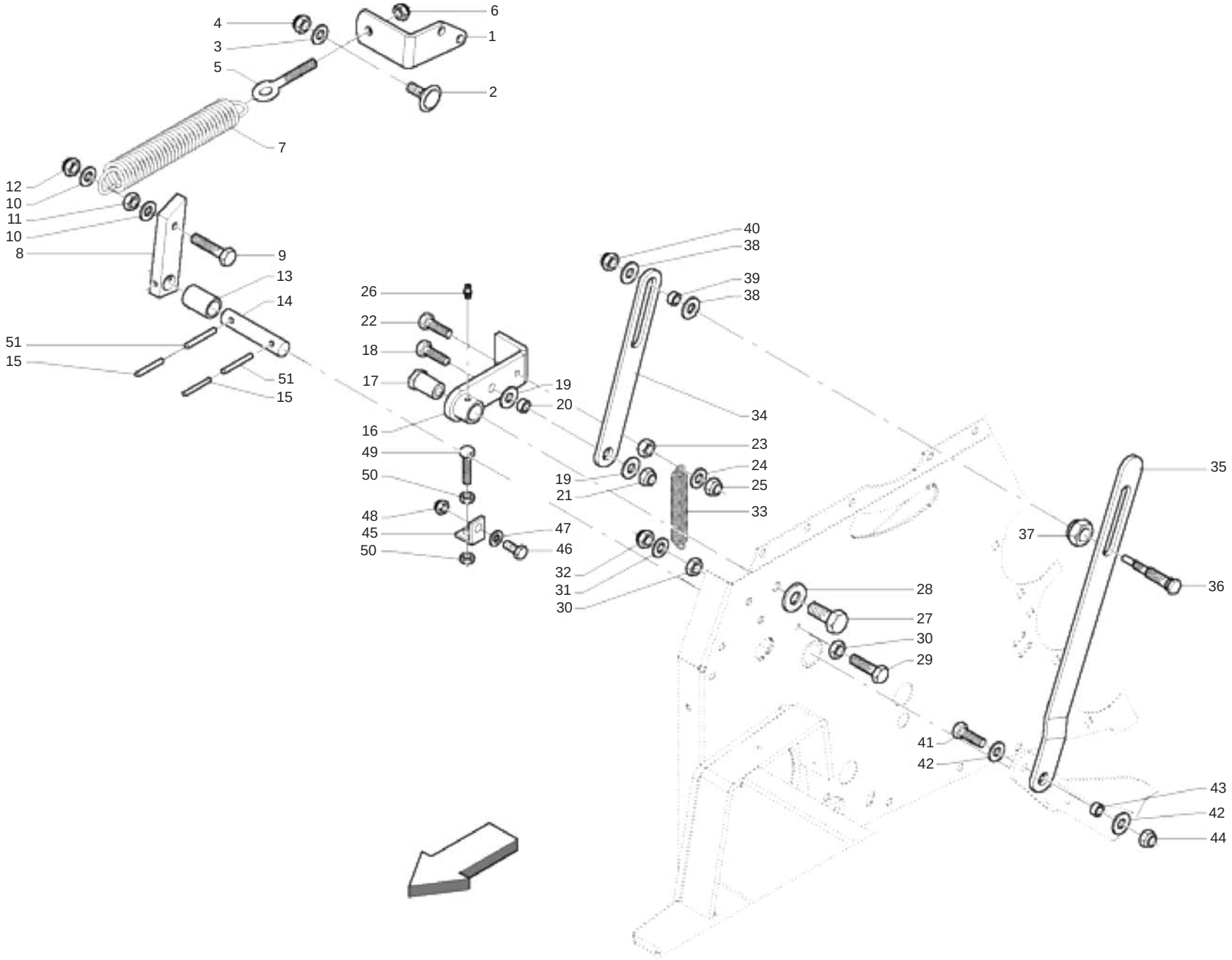




MASCHIO

cod. F07022223

# LEGATORE RETE (PARTE 4)
## *NET BINDER (PART 4)*

TAV_255

| Pos. | Cod. | Descrizione | Description | Description | Benennung | Descripcion |
|---|---|---|---|---|---|---|
| 1 | B0C6P0045 | ATTACCO MOLLA SGANCIO | SPRING ATTACK RELEASE | | | |
| 2 | B005C0003 | VITE TTQST 12X45-8.8 TORNITA | SCREW TTQST 12X45-8.8 | | | |
| 3 | F01410076 | ROS.M12 13X 20X2,0 U1749 ZN | WASHER | RONDELLE | SCHEIBE | |
| 4 | B00920412 | DADO M12X1,75 D985 8 ZN | NUT | ECROU | SELBSTSICHERNDE MUTTER M12-5S | |
| 5 | B00545168 | OCCHIOLO PER TENDITORI M12-DX | EYELET M12 | OEIL M12 | OSE M12 | |
| 6 | B00920412 | DADO M12X1,75 D985 8 ZN | NUT | ECROU | SELBSTSICHERNDE MUTTER M12-5S | |
| 7 | B01822744 | MOLLA 49,5 SPIRE | SPRING 49,5 SPIRAL | RESSORT | FEDER | |
| 8 | B0C002073 | SGANCIO LAMA FFPRO | BLADE UNLOCK | DECROCHET LAME | KLINGENAUSLOSER | |
| 9 | F01020519 | VITE M12X1,75X 60 U5739 8.8ZN | SCREW M12X1,75X 60 U5739 8.8ZN | | | |
| 10 | F01410076 | ROS.M12 13X 20X2,0 U1749 ZN | WASHER | RONDELLE | SCHEIBE | |
| 11 | F01200293 | DADO M12X1,75 U5588 CL8 ZN | NUT M12X1,75 U5588 6S ZN | ECROU M12X1,75 U5588 6S ZN | MUTTER M12X1,75 U5588 6S ZN | TUERCA M12X1,75 U5588 6S ZN |
| 12 | B00920412 | DADO M12X1,75 D985 8 ZN | NUT | ECROU | SELBSTSICHERNDE MUTTER M12-5S | |
| 13 | B02526852 | BUSSOLA NYLON | NYLON BUSH | GALET | BUCHSE | |
| 14 | B01301055 | SPINA TAGLIA RETE LATO COM. | PIN | GOUPILLE | STECKSTIFT | |
| 15 | F02100090 | SPINA E.P. 5X 40 U6873 C70 BR | ELASTIC PIN 5X40 | GOUJON ELASTIQUE 5X40 | SPANNHUELSE 5X40 | ESPINA ELASTICA 5X40 |
| 16 | B07T00026 | SGANCIO | RELEASE | DECROCHAGE | AUSLOESUNG | |
| 17 | B00500093 | PERNO FILETTATO | THREADED PIN | PIVOT FILETE | GEWINDEBOLZEN | |
| 18 | F01020514 | VITE M12X1,75X40 U5739 8.8ZN | SCR. M12X1,75X40 U5739 8.8ZN | VIS M12X1,75X40 U5739 8.8ZN | SCHRA. M12X1,75X40 U5739 8.8ZN | TORN. M12X1,75X40 U5739 8,8ZN |
| 19 | F01420120 | ROS.M12 13X 36X2,5 U6593 ZN | WASHER | RONDELLE | SCHEIBE | |
| 20 | B01300463 | BUSSOLA 12.5X20X10 | BUSH | DOUILLE | KOMPASS | |
| 21 | B00920412 | DADO M12X1,75 D985 8 ZN | NUT | ECROU | SELBSTSICHERNDE MUTTER M12-5S | |
| 22 | F01020445 | VITE M8X1,25X30 U5739 8.8ZN | SCR. M8X1,25X30 U5739 8.8ZN | VIS M 8X1,25X30 U5739 8.8 ZN | SCHRAU, M8X1,25X30 U5739 8.8ZN | TORN. M8X1,25X30 U5739 8.8 ZN |
| 23 | B00710208 | DADO M 8X1,25 U5588 6.8 ZN | NUT | ECROU | MUTTER M8-6S | |
| 24 | F01410051 | ROS.M8 8,4X 17X1,6 U6592 ZN | WASHER M8 8,4X17X1,6 U6592 ZN | RONDELLE | SCHEIBE | |
| 25 | B00920208 | DADO M8X1 D985 8ZN | NUT M8X1 D985 8ZN | ECROU | SELBSTSICHERNDE MUTTER M8-5S | |
| 26 | B04200610 | INGRASS.A SFERE M6X1 LUNGO | GREASE NIPPLE | GRAISSEUR HYDRAULIQUE | GERADER SCHMIERNIPPEL M6X1 | |
| 27 | F01020562 | VITE M16X2X30 U5739 8.8ZN | SCR. M16X2X30 U5739 8.8ZN | VIS M16X2X30 U5739 8.8 ZN | SCHRAUBE M16X2X30 U5739 8.8 ZN | TORNILLO M16X2X30 U5739 8.8 ZN |
| 28 | B01519319 | RALLA 16X38X5 | FIFTH WHEEL | BUTEE | SCREIBE | |
| 29 | F01020440 | VITE M8X1,25X25 U5739 8.8ZN | SCR. M8X1,25X25 U5739 8.8ZN | VIS M8X1,25X25 U5739 8.8 ZN | SCHRAUBE M8X1,25X25U5739 8.8ZN | TORNIL.M8X1,25X25 U5739 8.8 ZN |
| 30 | B00710208 | DADO M 8X1,25 U5588 6.8 ZN | NUT | ECROU | MUTTER M8-6S | |
| 31 | F01410051 | ROS.M8 8,4X 17X1,6 U6592 ZN | WASHER M8 8,4X17X1,6 U6592 ZN | RONDELLE | SCHEIBE | |
| 32 | B00920208 | DADO M8X1 D985 8ZN | NUT M8X1 D985 8ZN | ECROU | SELBSTSICHERNDE MUTTER M8-5S | |
| 33 | B01800025 | MOLLA 2 13 98T GRUPPO RETE | SPRING | RESSORT | FEDER | |
| 34 | B0C002081 | LEVA SGANCIO LAMA | BLADE UNLOCK LEVER | LEVIER DECROCHET LAME | KLINGENAUSLOESERHEBEL | |
| 35 | B0C2P0150 | COLLEGAMENTO LAMA | CONNECTION | CONNEXION | KLINGEKUPPLUNG | |
| 36 | B01301103 | PERNO CARICA LAMA | BLADE PIN | TOURILLON LAME | ZAPFEN | |
| 37 | B00920516 | DADO M16X 1,5 D985 6S ZN | NUT M16X1,5 D985 6S ZN | ECROU | SELBSTSICHERNDE MUTTER M16-5S | |
| 38 | F01420120 | ROS.M12 13X 36X2,5 U6593 ZN | WASHER | RONDELLE | SCHEIBE | |
| 39 | B01300463 | BUSSOLA 12.5X20X10 | BUSH | DOUILLE | KOMPASS | |
| 40 | B00920412 | DADO M12X1,75 D985 8 ZN | NUT | ECROU | SELBSTSICHERNDE MUTTER M12-5S | |
| 41 | F01020512 | VITE M12X1,75X35 U5739 8.8ZN | SCR. M12X1,75X35 U5739 8.8ZN | VIS M12X1,75X35 5739 8.8 ZN | SCHR. M12X1,75X35 5739 8.8 ZN | TORN. M12X1,75X35 5739 8.8 ZN |
| 42 | F01420120 | ROS.M12 13X 36X2,5 U6593 ZN | WASHER | RONDELLE | SCHEIBE | |
| 43 | B01300463 | BUSSOLA 12.5X20X10 | BUSH | DOUILLE | KOMPASS | |
| 44 | B00920412 | DADO M12X1,75 D985 8 ZN | NUT | ECROU | SELBSTSICHERNDE MUTTER M12-5S | |
| 45 | B0C000053 | FERMO COLT. | KNIVES STOP | ARRET COUTEAUX | MESSERANSCHLAG | |
| 46 | F01020510 | VITE M12X1,75X30 U5739 8.8ZN | SCR. M12X1,75X30 U5739 8.8ZN | VIS M12X1,75X30 U5739 8.8ZN | SCHRAU.M12X1,75X30 U5739 8.8ZN | TORN. M12X1,75X30 U5739 8.8ZN |
| 47 | F01410076 | ROS.M12 13X 20X2,0 U1749 ZN | WASHER | RONDELLE | SCHEIBE | |
| 48 | B00920412 | DADO M12X1,75 D985 8 ZN | NUT | ECROU | SELBSTSICHERNDE MUTTER M12-5S | |
| 49 | F01020487 | VITE M10X1,5X60 U5739 8.8ZN | SCR. M10X1,5X60 U5739 8.8ZN | VIS 10X60 5739 8.G ZN | SCHRAUBE 10X60 5739 8.G ZN | TORNILLO 10X60 5739 8.G ZN |
| 50 | B00710310 | DADO M10X1,25 U5588 6S ZN | NUT | ECROU | MUTTER M10-6S | |
| 51 | F02100142 | SPINA E.P. 8X 40 U6873 C70 BR | ELASTIC PIN 8X40 | GOUJON ELASTIQUE 8X40 | SPANNHUELSE 8X40 | ESPINA ELASTICA 8X40 |

# TAV_260

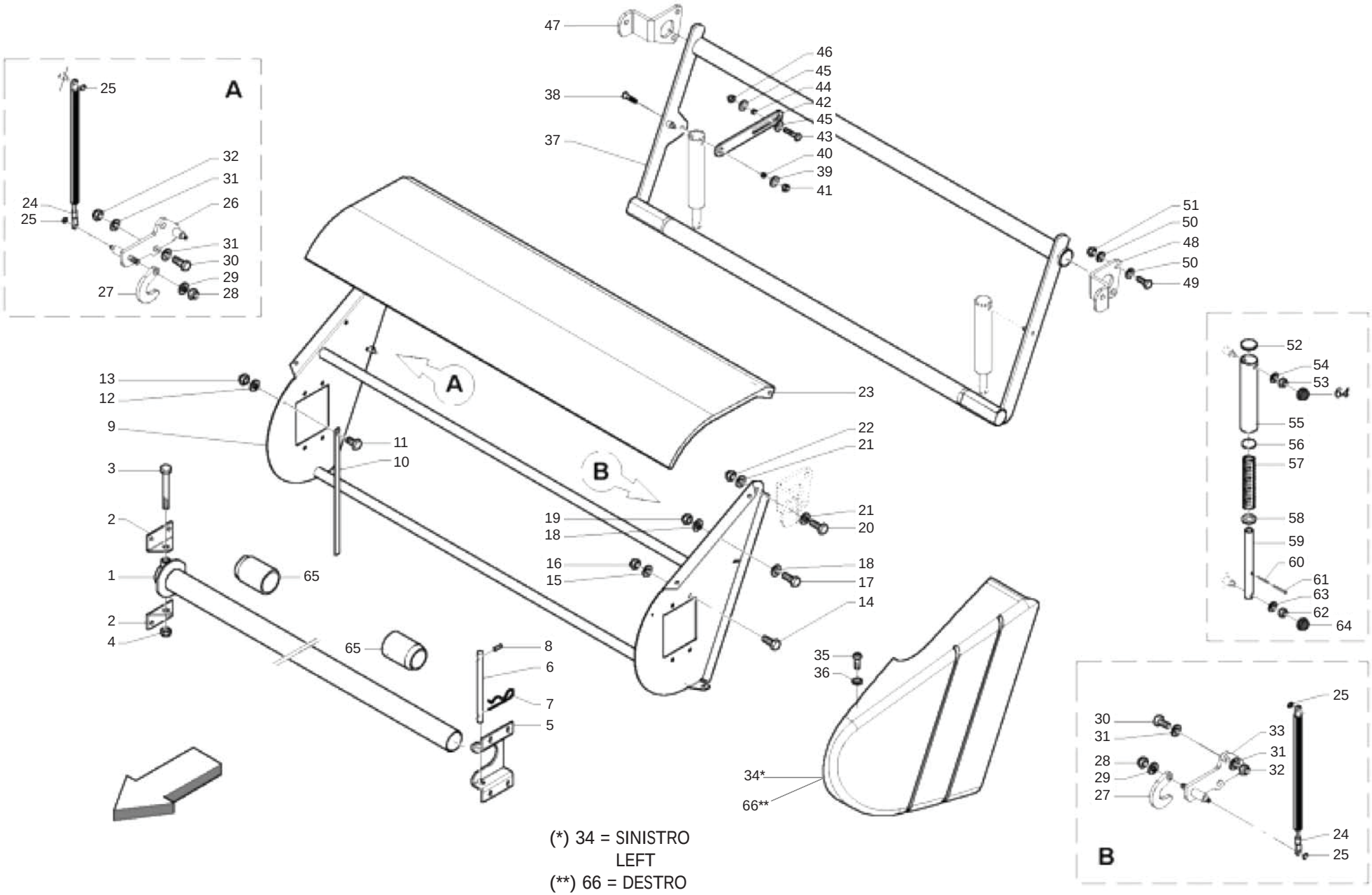


(*) 34 = SINISTRO
LEFT
(**) 66 = DESTRO
RIGHT

# LEGATORE RETE (PARTE 5)
## *NET BINDER (PART 5)*

TAV_260

| Pos. | Cod. | Descrizione | Description | Description | Benennung | Descripcion |
|---|---|---|---|---|---|---|
| 1 | B07SP0240 | TUBO PORTA ROTOLO | ROLL CARRYING TUBE | TUYAU PORTE-ROULEAU | ROHR ROLLEHALTER | |
| 2 | B0C100035 | ATTACCO FULCRO | FULCRUM ATTACHMENT | ATTELAGE POINT D APPUI | SCHWENKPUNKTBEFESTIGUNG | |
| 3 | F01020268 | VITE M16X2X130 U5737 8.8ZN | SCR. M16X2X130 U5737 8.8ZN | VIS M16X2X130 U5737 8.8 ZN | SCHRA. M16X2X130 U5737 8.8 ZN | TORN. M16X2X130 U5737 8.8 ZN |
| 4 | B00920516 | DADO M16X 1,5 D985 6S ZN | NUT M16X1,5 D985 6S ZN | ECROU | SELBSTSICHERNDE MUTTER M16-5S | |
| 5 | B0C100036 | ALLOGGIAMENTO TUBO | TUBE SEAT | LOGEMENT TUBE | ROHRSITZ | |
| 6 | B01300373 | SPINA FERMO TUBO PORTA ROTOLO | PIPE PIN | EPINE ARRET | ARRETIERBOLZEN FUER NETZROLLEN | |
| 7 | B01170377 | SPINA MOLLA 3 OCCH.SEMPL.ZINC. | PIN | GOUPILLE CLIPS | STIFT | |
| 8 | F02100066 | SPINA EL.4 X36 DIN 1481 INOX | PIN | GOUPILLE | STIFT | |
| 9 | B07T00001 | CASSONE RETE | NET STORAGE BOX | RESERVE FILET | NETZROLLENKASTEN | |
| 10 | B0C005257 | SOSTEGNO COPERCHIO | COVER SUPPORT | SUPPORT COUVERCLE | DECKELHALTER | |
| 11 | B00180620 | VITE M6X1X20 U5739 8.8ZN | SCREW | VIS | SCHRAUBE | |
| 12 | F01410037 | ROS.M6 6,4X12,5X1,6 U6592 ZN | WASHER | RONDELLE | BEILAGSCHEIBE 6 | |
| 13 | B00920106 | DADO M6X1 D985 8ZN | NUT | ECROU | SELBSTSICHERNDE MUTTER M6-5S | |
| 14 | F01020472 | VITE M10X1,5X25 U5739 8.8ZN | SCR. M10X1,5X25 U5739 8.8ZN | VIS M10X1,5X25 U5739 8.8 ZN | SCHRAUBE M10X1,5X25 U5739 8.8 | TORNILLO 10X25 U5739 8.8 ZN |
| 15 | F01410062 | ROS.M10 10,5X 18X 2 U6592 ZN | WASHER M10 10,5X 18X 2 U6592 | RONDELLE M10 10,5X18X2 ZN | DICHTUNGSRING M10 10,5X18X2 ZN | RONDANA M10 10,5X18X2 ZN |
| 16 | F01230202 | DADO M10X1,25 D985 8 ZN | SELF-LOCKING NUT | ECROU NYLSTOP | SELBSTSICHERNDE MUTTER M10-5S | |
| 17 | B00181030 | VITE M10X1,5 X 30 U5739 8.8ZN | SCREW | VIS | SCHRAUBE | |
| 18 | F01410062 | ROS.M10 10,5X 18X 2 U6592 ZN | WASHER M10 10,5X 18X 2 U6592 | RONDELLE M10 10,5X18X2 ZN | DICHTUNGSRING M10 10,5X18X2 ZN | RONDANA M10 10,5X18X2 ZN |
| 19 | F01230202 | DADO M10X1,25 D985 8 ZN | SELF-LOCKING NUT | ECROU NYLSTOP | SELBSTSICHERNDE MUTTER M10-5S | |
| 20 | B00181030 | VITE M10X1,5 X 30 U5739 8.8ZN | SCREW | VIS | SCHRAUBE | |
| 21 | F01410062 | ROS.M10 10,5X 18X 2 U6592 ZN | WASHER M10 10,5X 18X 2 U6592 | RONDELLE M10 10,5X18X2 ZN | DICHTUNGSRING M10 10,5X18X2 ZN | RONDANA M10 10,5X18X2 ZN |
| 22 | F01230202 | DADO M10X1,25 D985 8 ZN | SELF-LOCKING NUT | ECROU NYLSTOP | SELBSTSICHERNDE MUTTER M10-5S | |
| 23 | B07T00005 | COPERCHIO | CAP | COUVERCLE | DECKEL | |
| 24 | B0H100001 | MOLLA A GAS PER RETE L500-750N | GAS SPRING FOR NET L=500-750N | RESSORT GAS POUR FILET L=500-6 | GAS GETRIEBENE FEDER L=500-750 | |
| 25 | B01700008 | ANEL. D ARR. ALB. 8-E UNI3653 | SEEGER RING | BAGUE SEEGER | SEEGERRING E 8 | |
| 26 | B07T00011 | ATTACCO FRENO DX | RIGHT BRAKE ATTACHMENT | ATTELAGE FREIN DROIT | RECHTE BREMSHALTERUNG | |
| 27 | B0C004911 | GANCIO | HOOK | | | |
| 28 | F01230202 | DADO M10X1,25 D985 8 ZN | SELF-LOCKING NUT | ECROU NYLSTOP | SELBSTSICHERNDE MUTTER M10-5S | |
| 29 | F01410062 | ROS.M10 10,5X 18X 2 U6592 ZN | WASHER M10 10,5X 18X 2 U6592 | RONDELLE M10 10,5X18X2 ZN | DICHTUNGSRING M10 10,5X18X2 ZN | RONDANA M10 10,5X18X2 ZN |
| 30 | F01020510 | VITE M12X1,75X30 U5739 8.8ZN | SCR. M12X1,75X30 U5739 8.8ZN | VIS M12X1,75X30 U5739 8.8ZN | SCHRAU.M12X1,75X30 U5739 8.8ZN | TORN. M12X1,75X30 U5739 8.8ZN |
| 31 | F01410076 | ROS.M12 13X 20X2,0 U1749 ZN | WASHER | RONDELLE | SCHEIBE | |
| 32 | B00920412 | DADO M12X1,75 D985 8 ZN | NUT | ECROU | SELBSTSICHERNDE MUTTER M12-5S | |
| 33 | B07T00010 | ATTACCO FRENO SX | LEFT BRAKE ATTACHMENT | ATTELAGE FREIN GAUCHE | LINKE BREMSHALTERUNG | |
| 34 | B07V00110 | BOX RETE SX | LEFT NET BOX | BOITE FILET GAUCHE | LINKER NETZKASTEN | |
| 35 | B004N0820 | VITE NERA TTEI M 8X 20-10,9 | SCREW | VIS | SCHRAUBE TTEI M 8X20-10,9 | |
| 36 | B07V00119 | RONDELLA SOTTOVITE HD 8,5X24X2 | WASHER HD 8,5X24X2 | RONDELLE | STIFT | |
| 37 | B07T00012 | BRACCIO FRENA RETE | NET BRAKE ARM | BRAS FREINAGE FILET | NETZBREMSENARM | |
| 38 | F01030111 | VITE M12X1,75X40 U5933 10.9ZD | SCR. M12X1,75X40 U5933 10.9ZD | VIS 12X40 5933 8.8 ZN | SCHRAUBE 12X40 5933 8.8 ZN | TORNILLO 12X40 5933 8.8 ZN |
| 39 | F01420120 | ROS.M12 13X 36X2,5 U6593 ZN | WASHER | RONDELLE | SCHEIBE | |
| 40 | B01300463 | BUSSOLA 12.5X20X10 | BUSH | DOUILLE | KOMPASS | |
| 41 | B00920412 | DADO M12X1,75 D985 8 ZN | NUT | ECROU | SELBSTSICHERNDE MUTTER M12-5S | |
| 42 | B0C100051 | COLLEGAMENTO FRENO | BRAKE CONNECTON | CONNEXION FREIN | BREMSENKUPPLUNG | |
| 43 | F01020519 | VITE M12X1,75X 60 U5739 8.8ZN | SCREW M12X1,75X 60 U5739 8.8ZN | | | |
| 44 | B01300463 | BUSSOLA 12.5X20X10 | BUSH | DOUILLE | KOMPASS | |
| 45 | F01420120 | ROS.M12 13X 36X2,5 U6593 ZN | WASHER | RONDELLE | SCHEIBE | |
| 46 | B00920412 | DADO M12X1,75 D985 8 ZN | NUT | ECROU | SELBSTSICHERNDE MUTTER M12-5S | |
| 47 | B0C100047 | FULCRO FRENO CASSONE DX | BRAKE FULCRUM RIGHT BOX | POINT D APPUI FREIN BOITE DR | BREMSENSCHENKPUNKT RECHTES GEH | |
| 48 | B0C100048 | FULCRO FRENO CASSONE SX | BRAKE FULCRUM LEFT BOX | POINT D APPUI FREIN BOITE GA | BREMSENSCHENKPUNKT LINKES GEHA | |
| 49 | F01020508 | VITE M12X1,75X 25 U5739 8.8ZN | SCREW | VIS | SCHRAUBE | |
| 50 | F01410076 | ROS.M12 13X 20X2,0 U1749 ZN | WASHER | RONDELLE | SCHEIBE | |
| 51 | B00920412 | DADO M12X1,75 D985 8 ZN | NUT | ECROU | SELBSTSICHERNDE MUTTER M12-5S | |
| 52 | B07V00118 | TAPPO COPRITUBO 45 X 1-3 01IL | COVER PIPE | | | |
| 53 | B00920412 | DADO M12X1,75 D985 8 ZN | NUT | ECROU | SELBSTSICHERNDE MUTTER M12-5S | |
| 54 | F01410076 | ROS.M12 13X 20X2,0 U1749 ZN | WASHER | RONDELLE | SCHEIBE | |
| 55 | B01301079 | GUIDA ESTERNA | EXTERNAL GUIDE | GUIDE EXTERIEURE | AEUSSERE FUEHRUNG | |
| 56 | B01301081 | DISCO 36X5 | DISC 36X5 | DISQUE 36X5 | SCHEIBE 36X5 | |
| 57 | B01800046 | MOLLA 6 30 180C | SPRING | RESSORT | FEDER | |

# TAV_260

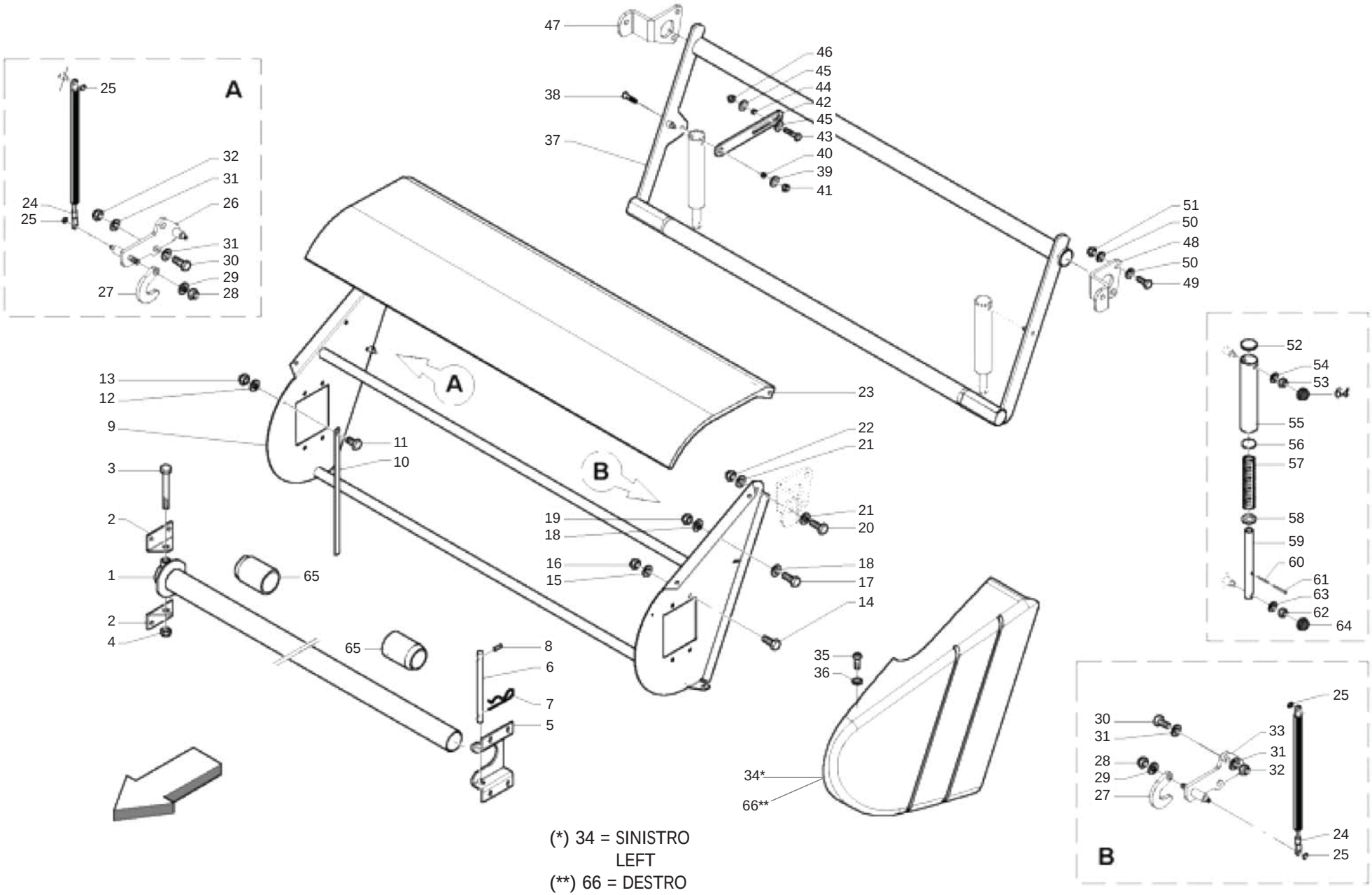


(*) 34 = SINISTRO
LEFT
(**) 66 = DESTRO
RIGHT

# LEGATORE RETE (PARTE 5)
## *NET BINDER (PART 5)*

TAV_260

| Pos. | Cod. | Descrizione | Description | Description | Benennung | Descripcion |
|---|---|---|---|---|---|---|
| 58 | B01301082 | RALLA 22 36 5 | FIFTH WHEEL | BUTEE | DISTANZSCHEIBE 22 36 5 | |
| 59 | B01301078 | GUIDA INFERIORE | LOWER GUIDE | GUIDE INFERIEURE | UNTERE FUEHRUNG | |
| 60 | B01110535 | SPINA ELAST. 5X 36 SS DIN 1481 | PIN | GOUPILLE | STIFT | |
| 61 | B01110835 | SPINA ELAST. 8X 36 SS DIN 1481 | PIN | GOUPILLE | STIFT | |
| 62 | B00920412 | DADO M12X1,75 D985 8 ZN | NUT | ECROU | SELBSTSICHERNDE MUTTER M12-5S | |
| 63 | F01410076 | ROS.M12 13X 20X2,0 U1749 ZN | WASHER | RONDELLE | SCHEIBE | |
| 64 | B07VC0016 | CAP. PROT. DADO M12 | GUARD CAP | CHAPEAU DE PROTECTION | SCHUTZDECKEL | |
| 65 | B025P0011 | TAMPONE ROTOLO RETE | BUSH FOR NET ROLL | BAGUES | SCHLEGEL | |
| 66 | B07V00111 | BOX RETE DX | RIGHT NET BOX | BOITE FILET DROIT | RECHTE NETZROLLENGEHAEUSE | |

# TAV_265

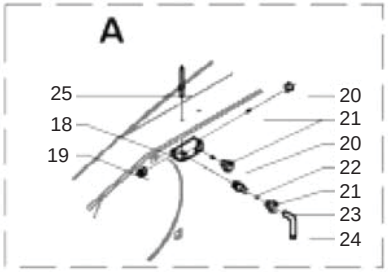
A
25
18
19
20
21
20
22
21
23
24

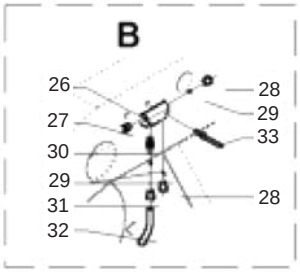
B
26
27
30
29
31
32
28
29
33
28

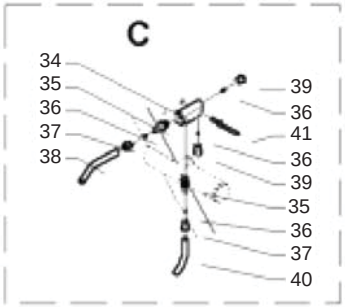
C
34
35
36
37
38
39
36
41
36
39
35
36
37
40

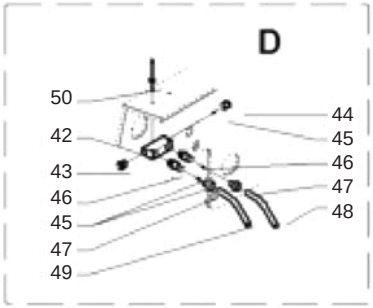
D
50
42
43
46
45
47
49
44
45
46
47
48

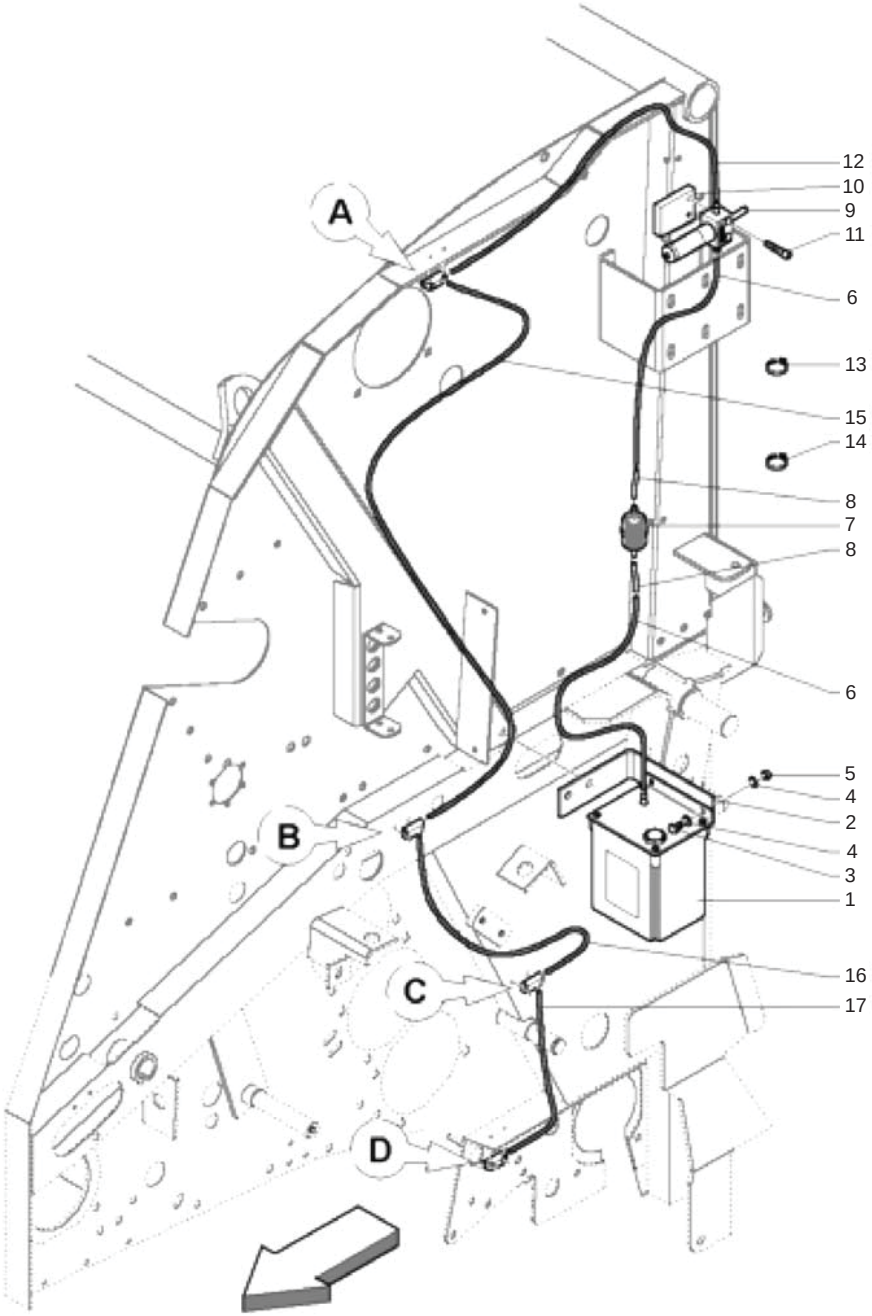
A
B
C
D
12
10
9
11
6
13
15
14
8
7
8
6
5
4
2
4
3
1
16
17

# IMPIANTO OLIATURA AUTOMATICA
## *AUTOMATIC OILING SYSTEM*

TAV_265

| Pos. | Cod. | Descrizione | Description | Description | Benennung | Descripcion |
|---|---|---|---|---|---|---|
| 1 | B04800000 | SERB.NYLON PER POMPA PISTONERI | NYLON TANK PUMP PISTONERI | RESERVOIR | OELBEHAELTER | |
| 2 | B0C004684 | ATTACCO SERBATOIO | TANK ATTACHMENT | ATTELAGE RESERVOIR | OLTANKBEFESTIGUNG | |
| 3 | B00180620 | VITE M6X1X20 U5739 8.8ZN | SCREW | VIS | SCHRAUBE | |
| 4 | F01410037 | ROS.M6 6,4X12,5X1,6 U6592 ZN | WASHER | RONDELLE | BEILAGSCHEIBE 6 | |
| 5 | B00920106 | DADO M6X1 D985 8ZN | NUT | ECROU | SELBSTSICHERNDE MUTTER M6-5S | |
| 6 | B0H000239 | TUBETTO IN NYLON 6 L=500 | NYLON HOSE | TUYAU EN NYLON DIAM 6 L=500 | NYLON ROEHRCHEN | |
| 7 | B0H000022 | FILTRO VASCHETTA OLIO | FILTER MAXIFIS | FILTRE ESSENCE | BENZINFILTER MAXIFIS | |
| 8 | B0H000023 | TUBETTO COLLEGAMENTO FILTRO | CONNECTION PIPE | PETIT TUBE JONCTION FILTRE | VERBINDUNGSSCHLAUCH | |
| 9 | B0H400007 | POMPA PIST PORT.6CCX10MM CORSA | PISTON PUMPT | POMPE PISTON | KOLBENPUMPE | |
| 10 | B0C003928 | ATTACCO OLIATORE | LUBRICATION ATTACHMENT | ATTELAGE GRAISSEUR | SCHMIERVORRICHTUNGSBEFESTIGUNG | |
| 11 | B00400850 | VITE M8X1,25X50 U5931 8.8BR | SCREW | VIS | SCHRAUBE M8X50.8.8 | |
| 12 | B0H000132 | TUBETTO IN NYLON 4 L=750 | NYLON PIPE 4 L=750 | PETIT TUYAU EN NYLON DIAM 4 L= | KLEINE ROEHRE AUS NYLON J4 L=7 | |
| 13 | F05150055 | FASCETTA LUMEFIX 3,6X180 | CLAMP LUMEFIX | BANDE LUMEFIX | MANSCHETTE LUMEFIX | |
| 14 | B0E600026 | FASCETTA 10,4X 10,7 CE09 NORMA | CLAMP 8,8X9,3 HLS A HILLS | BANDE 8,8X9,3 | MANSCHETTE 8,8X9,3 HLS A HILLS | |
| 15 | B0H000240 | TUBETTO IN NYLON 4 L=1200 | NYLON HOSE | TUYAU EN NYLON DIAM 4 L=1200 | NYLON ROEHRCHEN | |
| 16 | B0H000134 | TUBETTO IN NYLON 4 L=650 | NYLON PIPE 4 L=550 | PETIT TUYAU EN NYLON DIAM 4 L= | NYLONROEHRCHEN 4 L=550 | |
| 17 | B0H000133 | TUBETTO IN NYLON 4 L=420 | NYLON PIPE 4 L=420 | PETIT TUYAU EN NYLON DIAM 4 L= | NYLONROEHRCHEN 4 L=420 | |
| 18 | B0H000102 | DISTRIBUTORE UNILAT. 4 VIE | UNILATERAL DISTRIBUTOR | DISTRIBUTEUR UNILATERAL 4 VOIE | EINSEITIGER VERTEILER | |
| 19 | B0H600015 | TAPPORIF.ILC 05.001.0 | PLUG | BOUCHON | STOEPSEL | |
| 20 | B0H600016 | RACC. X TUBO 4RIF.ILC 04.102. | UNION FOR PIPE 4RI | RACCORD POUR TUYAU DIAM 4 | VERBINDUNGSTUECK FUR SCHLAUCH | |
| 21 | B0H600013 | DOPPI CONI PER TUBO 4 | DOUBLE CONE FOR PIPE | DOUBLE CONES POUR TUYAU DIAM 4 | DOPPELTER KEGEL FUER SCHLAUCH | |
| 22 | B0HE00003 | INIETTORE TIPO E | TYPE E INJECTOR | GICLEUR TYPE E | SPRITZDUESE | |
| 23 | B0H600014 | RACCORDO INIETTORE PER TUBO 4 | INJECTOR UNION FOR PIPE | RACCORD INJECTEUR POUR TUYAU D | EINSPRITZDUESENANSCHLUSS | |
| 24 | B0H000128 | TUBETTO IN RAME 4 L=120 | COPPER PIPE 4 L=1 | PETIT TUYAU EN CUIVRE DIAM. 4 | KUPFER ROEHRCHEN 04 L=1 | |
| 25 | B01000012 | RIVETTO STR. 6,4X22 ACCIAIO | RIVET | RIVET | ABREISSNIETEN 6X26 | |
| 26 | B0H000102 | DISTRIBUTORE UNILAT. 4 VIE | UNILATERAL DISTRIBUTOR | DISTRIBUTEUR UNILATERAL 4 VOIE | EINSEITIGER VERTEILER | |
| 27 | B0H600015 | TAPPORIF.ILC 05.001.0 | PLUG | BOUCHON | STOEPSEL | |
| 28 | B0H600016 | RACC. X TUBO 4RIF.ILC 04.102. | UNION FOR PIPE 4RI | RACCORD POUR TUYAU DIAM 4 | VERBINDUNGSTUECK FUR SCHLAUCH | |
| 29 | B0H600013 | DOPPI CONI PER TUBO 4 | DOUBLE CONE FOR PIPE | DOUBLE CONES POUR TUYAU DIAM 4 | DOPPELTER KEGEL FUER SCHLAUCH | |
| 30 | B0HE00003 | INIETTORE TIPO E | TYPE E INJECTOR | GICLEUR TYPE E | SPRITZDUESE | |
| 31 | B0H600014 | RACCORDO INIETTORE PER TUBO 4 | INJECTOR UNION FOR PIPE | RACCORD INJECTEUR POUR TUYAU D | EINSPRITZDUESENANSCHLUSS | |
| 32 | B0H000129 | TUBETTO IN RAME 4 L=90 | COPPER PIPE 4 L=9 | PETIT TUYAU EN CUIVRE DIAM. 4 | KUPFER ROEHRCHEN 4 L=9 | |
| 33 | B01000012 | RIVETTO STR. 6,4X22 ACCIAIO | RIVET | RIVET | ABREISSNIETEN 6X26 | |
| 34 | B0H000102 | DISTRIBUTORE UNILAT. 4 VIE | UNILATERAL DISTRIBUTOR | DISTRIBUTEUR UNILATERAL 4 VOIE | EINSEITIGER VERTEILER | |
| 35 | B0HE00003 | INIETTORE TIPO E | TYPE E INJECTOR | GICLEUR TYPE E | SPRITZDUESE | |
| 36 | B0H600013 | DOPPI CONI PER TUBO 4 | DOUBLE CONE FOR PIPE | DOUBLE CONES POUR TUYAU DIAM 4 | DOPPELTER KEGEL FUER SCHLAUCH | |
| 37 | B0H600014 | RACCORDO INIETTORE PER TUBO 4 | INJECTOR UNION FOR PIPE | RACCORD INJECTEUR POUR TUYAU D | EINSPRITZDUESENANSCHLUSS | |
| 38 | B0H000128 | TUBETTO IN RAME 4 L=120 | COPPER PIPE 4 L=1 | PETIT TUYAU EN CUIVRE DIAM. 4 | KUPFER ROEHRCHEN 04 L=1 | |
| 39 | B0H600016 | RACC. X TUBO 4RIF.ILC 04.102. | UNION FOR PIPE 4RI | RACCORD POUR TUYAU DIAM 4 | VERBINDUNGSTUECK FUR SCHLAUCH | |
| 40 | B0H000129 | TUBETTO IN RAME 4 L=90 | COPPER PIPE 4 L=9 | PETIT TUYAU EN CUIVRE DIAM. 4 | KUPFER ROEHRCHEN 4 L=9 | |
| 41 | B01000012 | RIVETTO STR. 6,4X22 ACCIAIO | RIVET | RIVET | ABREISSNIETEN 6X26 | |
| 42 | B0H000102 | DISTRIBUTORE UNILAT. 4 VIE | UNILATERAL DISTRIBUTOR | DISTRIBUTEUR UNILATERAL 4 VOIE | EINSEITIGER VERTEILER | |
| 43 | B0H600015 | TAPPORIF.ILC 05.001.0 | PLUG | BOUCHON | STOEPSEL | |
| 44 | B0H600016 | RACC. X TUBO 4RIF.ILC 04.102. | UNION FOR PIPE 4RI | RACCORD POUR TUYAU DIAM 4 | VERBINDUNGSTUECK FUR SCHLAUCH | |
| 45 | B0H600013 | DOPPI CONI PER TUBO 4 | DOUBLE CONE FOR PIPE | DOUBLE CONES POUR TUYAU DIAM 4 | DOPPELTER KEGEL FUER SCHLAUCH | |
| 46 | B0HE00003 | INIETTORE TIPO E | TYPE E INJECTOR | GICLEUR TYPE E | SPRITZDUESE | |
| 47 | B0H600014 | RACCORDO INIETTORE PER TUBO 4 | INJECTOR UNION FOR PIPE | RACCORD INJECTEUR POUR TUYAU D | EINSPRITZDUESENANSCHLUSS | |
| 48 | B0H000129 | TUBETTO IN RAME 4 L=90 | COPPER PIPE 4 L=9 | PETIT TUYAU EN CUIVRE DIAM. 4 | KUPFER ROEHRCHEN 4 L=9 | |
| 49 | B0H000131 | TUBETTO IN RAME 4 L=190 | COPPER PIPE 4 L=1 | PETIT TUYAU EN CUIVRE DIAM 4 L | KUPFER ROEHRCHEN 4 L=1 | |
| 50 | B01000012 | RIVETTO STR. 6,4X22 ACCIAIO | RIVET | RIVET | ABREISSNIETEN 6X26 | |

TAV_270

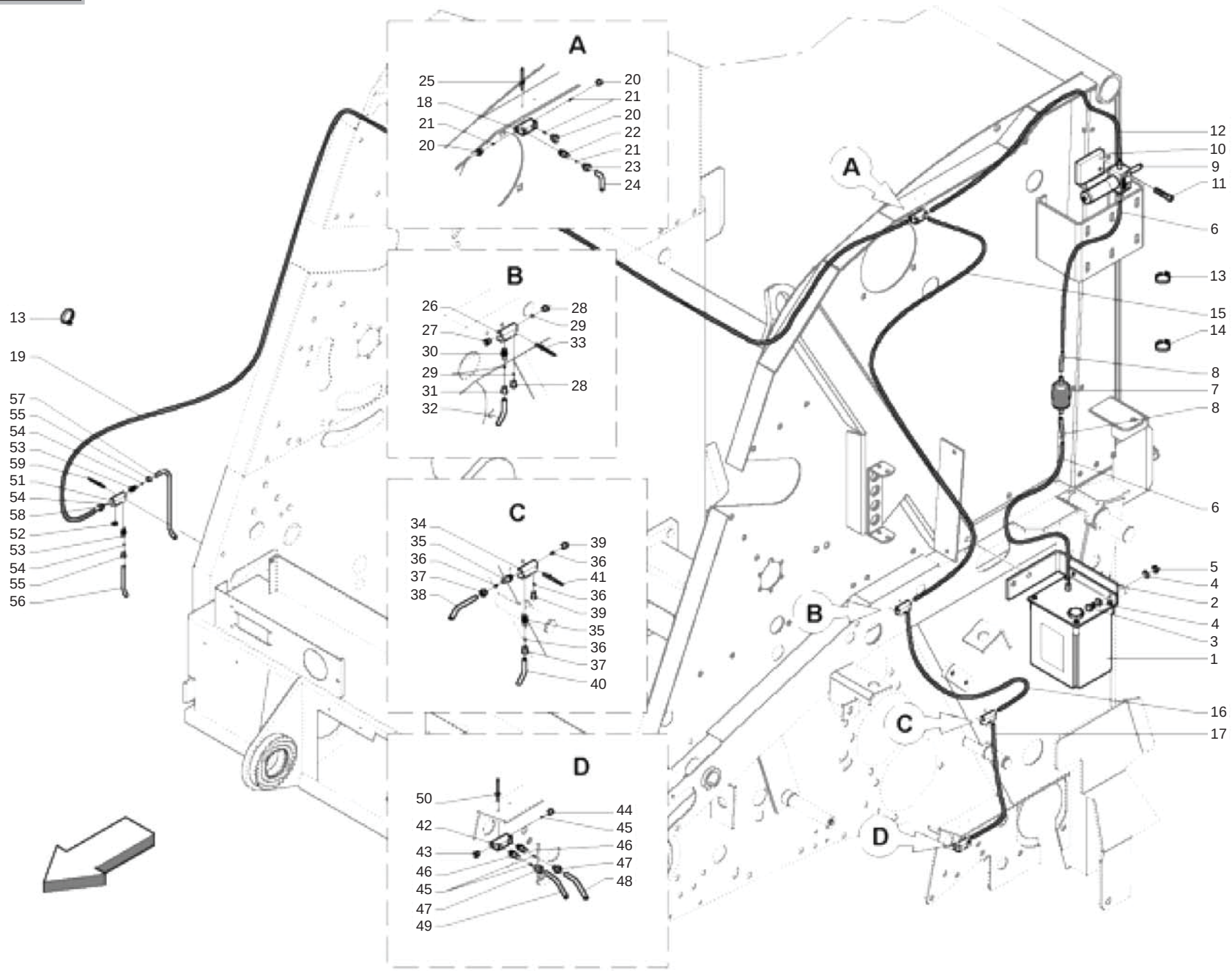
A
25
18
21
20
20
21
20
22
21
23
24
B
26
27
30
29
31
32
28
29
33
28
C
34
35
36
37
38
39
36
41
36
39
35
36
37
40
D
50
42
43
46
45
47
49
44
45
46
47
48
13
19
57
55
54
53
59
51
54
58
52
53
54
55
56
12
10
9
11
6
13
15
14
8
7
8
6
5
4
2
4
3
1
16
17

# IMPIANTO OLIATURA AUTOMATICA CUT
## *AUTOMATIC OILING CUT SYSTEM*

TAV_270

| Pos. | Cod. | Descrizione | Description | Description | Benennung | Descripcion |
|---|---|---|---|---|---|---|
| 1 | B04800000 | SERB.NYLON PER POMPA PISTONERI | NYLON TANK PUMP PISTONERI | RESERVOIR | OELBEHAELTER | |
| 2 | B0C004684 | ATTACCO SERBATOIO | TANK ATTACHMENT | ATTELAGE RESERVOIR | OLTANKBEFESTIGUNG | |
| 3 | B00180620 | VITE M6X1X20 U5739 8.8ZN | SCREW | VIS | SCHRAUBE | |
| 4 | F01410037 | ROS.M6 6,4X12,5X1,6 U6592 ZN | WASHER | RONDELLE | BEILAGSCHEIBE 6 | |
| 5 | B00920106 | DADO M6X1 D985 8ZN | NUT | ECROU | SELBSTSICHERNDE MUTTER M6-5S | |
| 6 | B0H000239 | TUBETTO IN NYLON 6 L=500 | NYLON HOSE | TUYAU EN NYLON DIAM 6 L=500 | NYLON ROEHRCHEN | |
| 7 | B0H000022 | FILTRO VASCHETTA OLIO | FILTER MAXIFIS | FILTRE ESSENCE | BENZINFILTER MAXIFIS | |
| 8 | B0H000023 | TUBETTO COLLEGAMENTO FILTRO | CONNECTION PIPE | PETIT TUBE JONCTION FILTRE | VERBINDUNGSSCHLAUCH | |
| 9 | B0H400007 | POMPA PIST PORT.6CCX10MM CORSA | PISTON PUMPT | POMPE PISTON | KOLBENPUMPE | |
| 10 | B0C003928 | ATTACCO OLIATORE | LUBRICATION ATTACHMENT | ATTELAGE GRAISSEUR | SCHMIERVORRICHTUNGSBEFESTIGUNG | |
| 11 | B00400850 | VITE M8X1,25X50 U5931 8.8BR | SCREW | VIS | SCHRAUBE M8X50.8.8 | |
| 12 | B0H000132 | TUBETTO IN NYLON 4 L=750 | NYLON PIPE 4 L=750 | PETIT TUYAU EN NYLON DIAM 4 L= | KLEINE ROEHRE AUS NYLON J4 L=7 | |
| 13 | F05150055 | FASCETTA LUMEFIX 3,6X180 | CLAMP LUMEFIX | BANDE LUMEFIX | MANSCHETTE LUMEFIX | |
| 14 | B0E600026 | FASCETTA 10,4X 10,7 CE09 NORMA | CLAMP 8,8X9,3 HLS A HILLS | BANDE 8,8X9,3 | MANSCHETTE 8,8X9,3 HLS A HILLS | |
| 15 | B0H000240 | TUBETTO IN NYLON 4 L=1200 | NYLON HOSE | TUYAU EN NYLON DIAM 4 L=1200 | NYLON ROEHRCHEN | |
| 16 | B0H000134 | TUBETTO IN NYLON 4 L=650 | NYLON PIPE 4 L=550 | PETIT TUYAU EN NYLON DIAM 4 L= | NYLONROEHRCHEN 4 L=550 | |
| 17 | B0H000133 | TUBETTO IN NYLON 4 L=420 | NYLON PIPE 4 L=420 | PETIT TUYAU EN NYLON DIAM 4 L= | NYLONROEHRCHEN 4 L=420 | |
| 18 | B0H000102 | DISTRIBUTORE UNILAT. 4 VIE | UNILATERAL DISTRIBUTOR | DISTRIBUTEUR UNILATERAL 4 VOIE | EINSEITIGER VERTEILER | |
| 19 | B0H000241 | TUBETTO IN NYLON 4 L=2500 | NYLON HOSE | TUYAU EN NYLON DIAM 4 L=2500 | NYLON ROEHRCHEN | |
| 20 | B0H600016 | RACC. X TUBO 4RIF.ILC 04.102. | UNION FOR PIPE 4RI | RACCORD POUR TUYAU DIAM 4 | VERBINDUNGSTUECK FUR SCHLAUCH | |
| 21 | B0H600013 | DOPPI CONI PER TUBO 4 | DOUBLE CONE FOR PIPE | DOUBLE CONES POUR TUYAU DIAM 4 | DOPPELTER KEGEL FUER SCHLAUCH | |
| 22 | B0HE00003 | INIETTORE TIPO E | TYPE E INJECTOR | GICLEUR TYPE E | SPRITZDUESE | |
| 23 | B0H600014 | RACCORDO INIETTORE PER TUBO 4 | INJECTOR UNION FOR PIPE | RACCORD INJECTEUR POUR TUYAU D | EINSPRITZDUESENANSCHLUSS | |
| 24 | B0H000128 | TUBETTO IN RAME 4 L=120 | COPPER PIPE 4 L=1 | PETIT TUYAU EN CUIVRE DIAM. 4 | KUPFER ROEHRCHEN 04 L=1 | |
| 25 | B01000012 | RIVETTO STR. 6,4X22 ACCIAIO | RIVET | RIVET | ABREISSNIETEN 6X26 | |
| 26 | B0H000102 | DISTRIBUTORE UNILAT. 4 VIE | UNILATERAL DISTRIBUTOR | DISTRIBUTEUR UNILATERAL 4 VOIE | EINSEITIGER VERTEILER | |
| 27 | B0H600015 | TAPPORIF.ILC 05.001.0 | PLUG | BOUCHON | STOEPSEL | |
| 28 | B0H600016 | RACC. X TUBO 4RIF.ILC 04.102. | UNION FOR PIPE 4RI | RACCORD POUR TUYAU DIAM 4 | VERBINDUNGSTUECK FUR SCHLAUCH | |
| 29 | B0H600013 | DOPPI CONI PER TUBO 4 | DOUBLE CONE FOR PIPE | DOUBLE CONES POUR TUYAU DIAM 4 | DOPPELTER KEGEL FUER SCHLAUCH | |
| 30 | B0HE00003 | INIETTORE TIPO E | TYPE E INJECTOR | GICLEUR TYPE E | SPRITZDUESE | |
| 31 | B0H600014 | RACCORDO INIETTORE PER TUBO 4 | INJECTOR UNION FOR PIPE | RACCORD INJECTEUR POUR TUYAU D | EINSPRITZDUESENANSCHLUSS | |
| 32 | B0H000129 | TUBETTO IN RAME 4 L=90 | COPPER PIPE 4 L=9 | PETIT TUYAU EN CUIVRE DIAM. 4 | KUPFER ROEHRCHEN 4 L=9 | |
| 33 | B01000012 | RIVETTO STR. 6,4X22 ACCIAIO | RIVET | RIVET | ABREISSNIETEN 6X26 | |
| 34 | B0H000102 | DISTRIBUTORE UNILAT. 4 VIE | UNILATERAL DISTRIBUTOR | DISTRIBUTEUR UNILATERAL 4 VOIE | EINSEITIGER VERTEILER | |
| 35 | B0HE00003 | INIETTORE TIPO E | TYPE E INJECTOR | GICLEUR TYPE E | SPRITZDUESE | |
| 36 | B0H600013 | DOPPI CONI PER TUBO 4 | DOUBLE CONE FOR PIPE | DOUBLE CONES POUR TUYAU DIAM 4 | DOPPELTER KEGEL FUER SCHLAUCH | |
| 37 | B0H600014 | RACCORDO INIETTORE PER TUBO 4 | INJECTOR UNION FOR PIPE | RACCORD INJECTEUR POUR TUYAU D | EINSPRITZDUESENANSCHLUSS | |
| 38 | B0H000128 | TUBETTO IN RAME 4 L=120 | COPPER PIPE 4 L=1 | PETIT TUYAU EN CUIVRE DIAM. 4 | KUPFER ROEHRCHEN 04 L=1 | |
| 39 | B0H600016 | RACC. X TUBO 4RIF.ILC 04.102. | UNION FOR PIPE 4RI | RACCORD POUR TUYAU DIAM 4 | VERBINDUNGSTUECK FUR SCHLAUCH | |
| 40 | B0H000129 | TUBETTO IN RAME 4 L=90 | COPPER PIPE 4 L=9 | PETIT TUYAU EN CUIVRE DIAM. 4 | KUPFER ROEHRCHEN 4 L=9 | |
| 41 | B01000012 | RIVETTO STR. 6,4X22 ACCIAIO | RIVET | RIVET | ABREISSNIETEN 6X26 | |
| 42 | B0H000102 | DISTRIBUTORE UNILAT. 4 VIE | UNILATERAL DISTRIBUTOR | DISTRIBUTEUR UNILATERAL 4 VOIE | EINSEITIGER VERTEILER | |
| 43 | B0H600015 | TAPPORIF.ILC 05.001.0 | PLUG | BOUCHON | STOEPSEL | |
| 44 | B0H600016 | RACC. X TUBO 4RIF.ILC 04.102. | UNION FOR PIPE 4RI | RACCORD POUR TUYAU DIAM 4 | VERBINDUNGSTUECK FUR SCHLAUCH | |
| 45 | B0H600013 | DOPPI CONI PER TUBO 4 | DOUBLE CONE FOR PIPE | DOUBLE CONES POUR TUYAU DIAM 4 | DOPPELTER KEGEL FUER SCHLAUCH | |
| 46 | B0HE00003 | INIETTORE TIPO E | TYPE E INJECTOR | GICLEUR TYPE E | SPRITZDUESE | |
| 47 | B0H600014 | RACCORDO INIETTORE PER TUBO 4 | INJECTOR UNION FOR PIPE | RACCORD INJECTEUR POUR TUYAU D | EINSPRITZDUESENANSCHLUSS | |
| 48 | B0H000129 | TUBETTO IN RAME 4 L=90 | COPPER PIPE 4 L=9 | PETIT TUYAU EN CUIVRE DIAM. 4 | KUPFER ROEHRCHEN 4 L=9 | |
| 49 | B0H000131 | TUBETTO IN RAME 4 L=190 | COPPER PIPE 4 L=1 | PETIT TUYAU EN CUIVRE DIAM 4 L | KUPFER ROEHRCHEN 4 L=1 | |
| 50 | B01000012 | RIVETTO STR. 6,4X22 ACCIAIO | RIVET | RIVET | ABREISSNIETEN 6X26 | |
| 51 | B0H000102 | DISTRIBUTORE UNILAT. 4 VIE | UNILATERAL DISTRIBUTOR | DISTRIBUTEUR UNILATERAL 4 VOIE | EINSEITIGER VERTEILER | |
| 52 | B0H600015 | TAPPORIF.ILC 05.001.0 | PLUG | BOUCHON | STOEPSEL | |
| 53 | B0HE00003 | INIETTORE TIPO E | TYPE E INJECTOR | GICLEUR TYPE E | SPRITZDUESE | |
| 54 | B0H600013 | DOPPI CONI PER TUBO 4 | DOUBLE CONE FOR PIPE | DOUBLE CONES POUR TUYAU DIAM 4 | DOPPELTER KEGEL FUER SCHLAUCH | |
| 55 | B0H600014 | RACCORDO INIETTORE PER TUBO 4 | INJECTOR UNION FOR PIPE | RACCORD INJECTEUR POUR TUYAU D | EINSPRITZDUESENANSCHLUSS | |
| 56 | B0H000128 | TUBETTO IN RAME 4 L=120 | COPPER PIPE 4 L=1 | PETIT TUYAU EN CUIVRE DIAM. 4 | KUPFER ROEHRCHEN 04 L=1 | |
| 57 | B0H000130 | TUBETTO IN RAME 4 L=150 | COPPER PIPE 4 L=1 | PETIT TUYAU EN CUIVRE DIAM 4 L | KUPFER ROEHRCHEN 4 L=1 | |

TAV_270

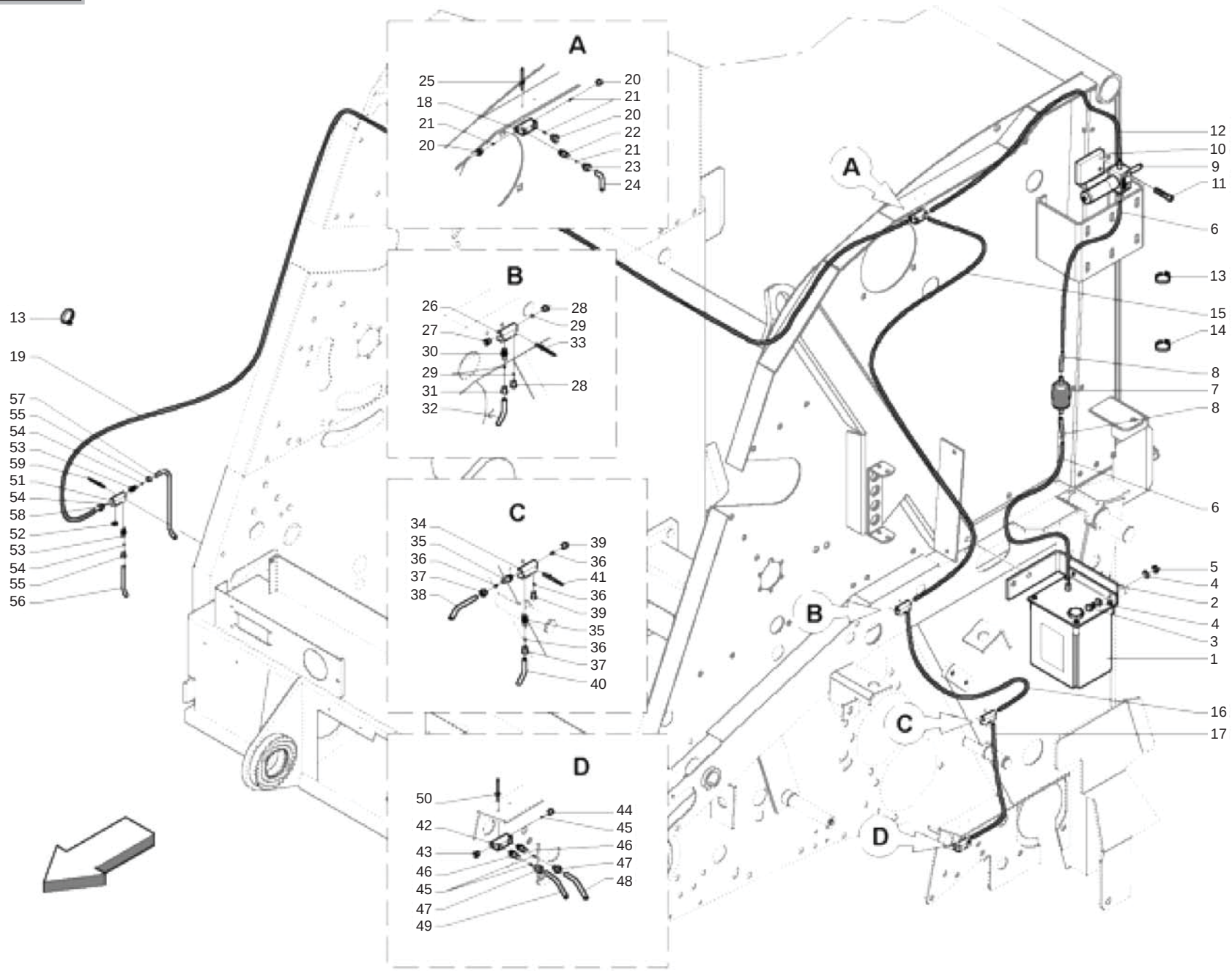




MASCHIO

cod. F07022223

# IMPIANTO OLIATURA AUTOMATICA CUT
## *AUTOMATIC OILING CUT SYSTEM*

| Pos. | Cod. | Descrizione | Description | Description | Benennung | Descripcion |
|---|---|---|---|---|---|---|
| 58 | B0H600016 | RACC. X TUBO 4RIF.ILC 04.102. | UNION FOR PIPE 4RI | RACCORD POUR TUYAU DIAM 4 | VERBINDUNGSTUECK FUR SCHLAUCH | |
| 59 | B01000012 | RIVETTO STR. 6,4X22 ACCIAIO | RIVET | RIVET | ABREISSNIETEN 6X26 | |

# TAV_275

(*) 17, 18 = SINISTRO
LEFT
(**) 51, 52 = DESTRO
RIGHT

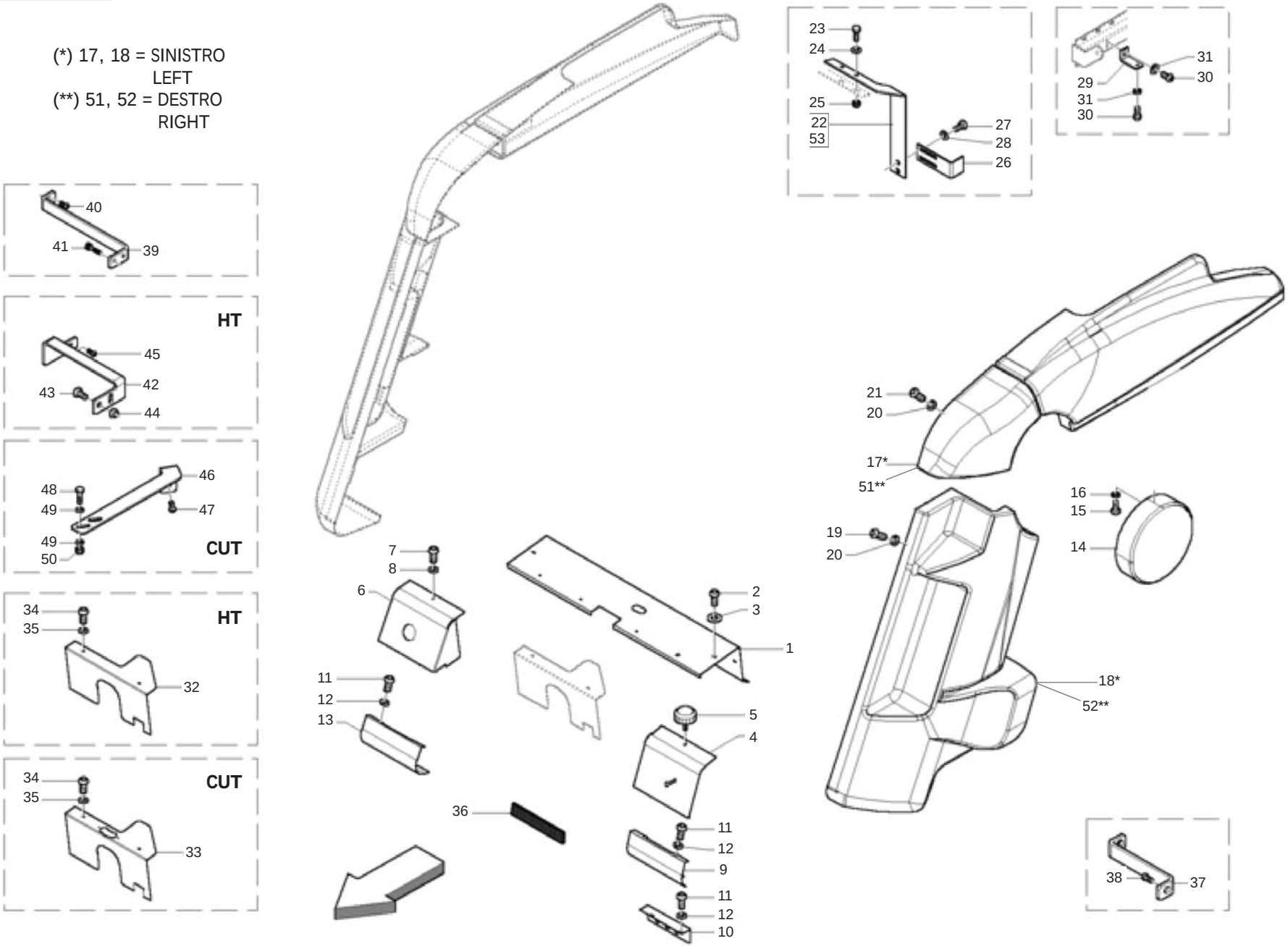




MASCHIO

cod. F07022223

# CARTER ANTERIORI
## *FRONT CARTER*

TAV_275

| Pos. | Cod. | Descrizione | Description | Description | Benennung | Descripcion |
|---|---|---|---|---|---|---|
| 1 | B0C004454 | PROT. SUPERIORE | HIGHER PROTECTION | PROTECTION SUPERIEURE | SCHUETZ OBEN | |
| 2 | B00470820 | VITE TTEI M 8X 20-10,9 UMBRAKO | SCREW | VIS | SCHRAUBE TTEI M 8X 20-10.9 | |
| 3 | F01420048 | ROS.M8 8,4X 24X 2 U6593 ZN | WASHER | RONDELLE | SCHEIBE | |
| 4 | B0C004632 | SPORTELLO | DOOR | GUICHET | TUER | |
| 5 | B07V00106 | VOLANTINO M8X15 DIAM. 30 | KNOB WHEEL | VOLAN M 8 DIAM. 30X19 | HANDRAD | |
| 6 | B0C004958 | SPORTELLO DX | RIGHT DOOR | GUICHET DROIT | FENSTER RECHTS | |
| 7 | B00470815 | VITE TTEI M 8X 15-8.8 UNBRA | SCREW | VIS | SCHRAUBE VERZINKT TTEI M8X15 8 | |
| 8 | F01420048 | ROS.M8 8,4X 24X 2 U6593 ZN | WASHER | RONDELLE | SCHEIBE | |
| 9 | B0C005254 | CHIUSURA INFERIORE SX | LEFT LOWER CLOSURE | FERMETURE INFERIEURE GAUCHE | VERSCHLUSS UNTEN | |
| 10 | B0C004370 | TERMINALE CHIUSURA INF.SX | TERMINALE CHIUSURA INF.SX . | | | |
| 11 | B00470620 | VITE TTEI M 6X 20-8.8 UNBRA | SCREW | VIS | SCHRAUBE TTEI M6X20-10.9 | |
| 12 | F01410037 | ROS.M6 6,4X12,5X1,6 U6592 ZN | WASHER | RONDELLE | BEILAGSCHEIBE 6 | |
| 13 | B0C004622 | CHIUSURA INFERIORE DX | RIGHT LOWER CLOSURE | FERMETURE INFERIEURE DROITE | VERSCHLUSS RECHTS | |
| 14 | B07V00104 | BOTTONE | BUTTON | BOUTON | KNOPF | |
| 15 | F01020380 | VITE M5X0,8X20 U5739 8.8ZN | SCR. M5X0,8X20 U5739 8.8ZN | VIS M5X0,8X20 U5739 8.8ZN | SCHRAUBE M5X0,8X20 U5739 8.8ZN | TORNILLO M5X0,8X20 U5739 8.8ZN |
| 16 | F01420023 | ROS.M5 5,3X 15X1,5 U6593 ZN | WASHER M5 5,3X 15X1,5 U6593 | | | |
| 17 | B07V00101 | CAPPELLO SX 265 | LEFT CAP 265 | CHAPEAU GAUCHE 265 | DECKEL LINKS 265 | |
| 18 | B07V00103 | SPIGOLO ANT. SX | LEFT FRONT EDGE | COIN EN AVANT GAUCHE | VORDERE KANTE LINKS | |
| 19 | B004N0825 | VITE NERA TTEI M 8X 25-10,9 | SCREW | VIS | SCHRAUBE TCEI M 8X25 | |
| 20 | B07V00119 | RONDELLA SOTTOVITE HD 8,5X24X2 | WASHER HD 8,5X24X2 | RONDELLE | STIFT | |
| 21 | B004N0820 | VITE NERA TTEI M 8X 20-10,9 | SCREW | VIS | SCHRAUBE TTEI M 8X20-10,9 | |
| 22 | B0C004424 | SOSTEGNO REGOLATORE SX | LEFT REGULATOR SUPPORT | SUPPORT REGULATEUR GAUCHE | EINSTELLERHALTER LINKS | |
| 23 | F01020063 | VITE M8X1,25X35 U5737 8.8ZN | SCR. M8X1,25X35 U5737 8.8ZN | VIS M8X1,25X35 U5737 8.8ZN | SCHRAU. M8X1,25X35 U5737 8.8ZN | TORN. M8X1,25X35 U5737 8.8ZN |
| 24 | F01420048 | ROS.M8 8,4X 24X 2 U6593 ZN | WASHER | RONDELLE | SCHEIBE | |
| 25 | B00920208 | DADO M8X1 D985 8ZN | NUT M8X1 D985 8ZN | ECROU | SELBSTSICHERNDE MUTTER M8-5S | |
| 26 | B0C004372 | REGOLATORE CARTER LATERALI | SIDE GUARD ADJUSTING DEVICE | REGLEUR CARTERS LATERAUX | EINSTELLER CARTER SEITEN | |
| 27 | F01020445 | VITE M8X1,25X30 U5739 8.8ZN | SCR. M8X1,25X30 U5739 8.8ZN | VIS M 8X1,25X30 U5739 8.8 ZN | SCHRAU, M8X1,25X30 U5739 8.8ZN | TORN. M8X1,25X30 U5739 8.8 ZN |
| 28 | F01420048 | ROS.M8 8,4X 24X 2 U6593 ZN | WASHER | RONDELLE | SCHEIBE | |
| 29 | B0C005196 | SOSTEGNO CARTER SUPERIORI | SUPPORT TOP CARTER | | | |
| 30 | B004N0820 | VITE NERA TTEI M 8X 20-10,9 | SCREW | VIS | SCHRAUBE TTEI M 8X20-10,9 | |
| 31 | F01420048 | ROS.M8 8,4X 24X 2 U6593 ZN | WASHER | RONDELLE | SCHEIBE | |
| 32 | B0C004952 | CARTER CENTRALE | CENTRAL GUARD | CARTER CENTRALE | ZENTRAL ABDECKPLATTE | |
| 33 | B0C004626 | CARTER CENTRALE CUT | CUT CENTRAL GUARD | CARTER CENTRAL CUT | CARTER ZENTRAL CUT | |
| 34 | F01030211 | VITE M8X1,25X25 U7380 10.9ZD | SCR. M8X1,25X25 U7380 10.9ZD | VIS 8X25 U7380 10.9 ZN | SCHRAUBE 8X25 U7380 10.9 ZN | TORNILLO 8X25 U7380 10.9 ZN |
| 35 | F01420048 | ROS.M8 8,4X 24X 2 U6593 ZN | WASHER | RONDELLE | SCHEIBE | |
| 36 | B07VP0011 | PROT. ASOLA | HOLE PROTECTION | PROTECTION FENTE | LOCHSCHUTZ | |
| 37 | B0C005203 | SOSTEGNO LAT. SX CARTER | GUARD LEFT SIDE SUPPORT | SUPPORT LATERAL GAUCHE CARTER | HALTER | |
| 38 | B004N0820 | VITE NERA TTEI M 8X 20-10,9 | SCREW | VIS | SCHRAUBE TTEI M 8X20-10,9 | |
| 39 | B0C005197 | SOSTEGNO LAT. DX CARTER | GUARD RIGHT SIDE SUPPORT | SUPPORT LATERAL DROIT CARTER | SEITENANSCHLUSS | |
| 40 | B004N0820 | VITE NERA TTEI M 8X 20-10,9 | SCREW | VIS | SCHRAUBE TTEI M 8X20-10,9 | |
| 41 | B00370001 | VITE TE M 8X16 A SEZ.TRILOBATA | SCREW TRE M 8X16 SEZ TROUBLED | VIS | SCHRAUBE M 8X15 | |
| 42 | B0C4P0003 | SOSTEGNO SPIGOLO INFERIORE DX | RIGHT LOWER EDGE SUPPORT | SUPPORT COIN INFERIEUR DROIT | KANTEHALTER | |
| 43 | B00181255 | VITE M12X 55-8.8 UNI 5739 | SCREW | VIS | VERZINKTE SCHRAUBE | |
| 44 | B00920412 | DADO M12X1,75 D985 8 ZN | NUT | ECROU | SELBSTSICHERNDE MUTTER M12-5S | |
| 45 | B004N0820 | VITE NERA TTEI M 8X 20-10,9 | SCREW | VIS | SCHRAUBE TTEI M 8X20-10,9 | |
| 46 | B0C4P0004 | SOSTEGNO SPIGOLO INFERIORE DX | CUT RIGHT LOWER EDGE SUPPORT | | | |
| 47 | B004N0820 | VITE NERA TTEI M 8X 20-10,9 | SCREW | VIS | SCHRAUBE TTEI M 8X20-10,9 | |
| 48 | F01020510 | VITE M12X1,75X30 U5739 8.8ZN | SCR. M12X1,75X30 U5739 8.8ZN | VIS M12X1,75X30 U5739 8.8ZN | SCHRAU.M12X1,75X30 U5739 8.8ZN | TORN. M12X1,75X30 U5739 8.8ZN |
| 49 | F01410076 | ROS.M12 13X 20X2,0 U1749 ZN | WASHER | RONDELLE | SCHEIBE | |
| 50 | B00920412 | DADO M12X1,75 D985 8 ZN | NUT | ECROU | SELBSTSICHERNDE MUTTER M12-5S | |
| 51 | B07V00100 | CAPPELLO DX 265 | RIGHT CAP 265 | CHAPEAU DROIT 265 | DECKEL RECHTS 265 | |
| 52 | B07V00102 | SPIGOLO ANT. DX | RIGHT FRONT EDGE | COIN EN AVANT DROIT | VORDERE KANTE RECHTS | |
| 53 | B0C004425 | SOSTEGNO REGOLATORE DX | RIGHT REGULATOR SUPPORT | SUPPORT REGULATEUR DROIT | EINSTELLERHALTER RECHTS | |

# TAV_280

(*) 1, 8, 13, 43, 47, 52, 53, 59 = SINISTRO
LEFT
(**) 61, 62, 63, 64, 65, 66, 67, 68 = DESTRO
RIGHT

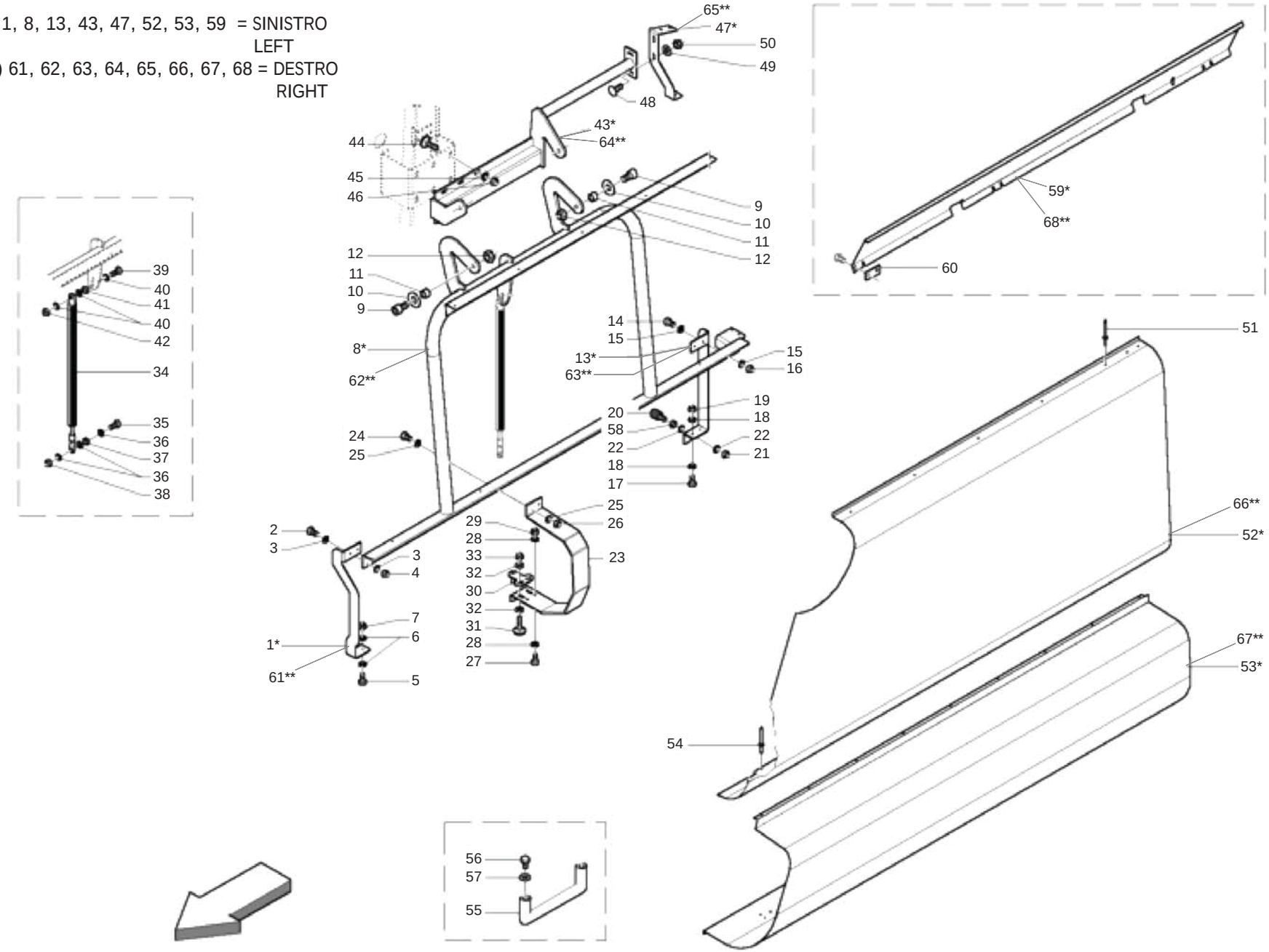

# CARTER LATERALI
## *SIDE CARTER*

TAV_280

| Pos. | Cod. | Descrizione | Description | Description | Benennung | Descripcion |
|---|---|---|---|---|---|---|
| 1 | B0C005009 | SOSTEGNO ANT. SX | LEFT FRONT SUPPORT | SUPPORT EN AVANT GAUCHE | HALTER VORNE LINKS | |
| 2 | B00180625 | VITE M6X1X 25 U5739 8.8ZN | SCREW | VIS | SCHRAUBE | |
| 3 | F01410037 | ROS.M6 6,4X12,5X1,6 U6592 ZN | WASHER | RONDELLE | BEILAGSCHEIBE 6 | |
| 4 | B00920106 | DADO M6X1 D985 8ZN | NUT | ECROU | SELBSTSICHERNDE MUTTER M6-5S | |
| 5 | B00180620 | VITE M6X1X20 U5739 8.8ZN | SCREW | VIS | SCHRAUBE | |
| 6 | F01410037 | ROS.M6 6,4X12,5X1,6 U6592 ZN | WASHER | RONDELLE | BEILAGSCHEIBE 6 | |
| 7 | B00920106 | DADO M6X1 D985 8ZN | NUT | ECROU | SELBSTSICHERNDE MUTTER M6-5S | |
| 8 | B07S01614 | TELAIO CARTER SX HT | HT LEFT GUARD FRAME | CHASSIS CARTER GAUCHE HT | CARTER RAHMEN LINKS HT | |
| 9 | F01040140 | VITE M12X1,75X 40 U5931 8.8ZN | SCREW M12X1,75X 40 U5931 8.8Z | | | |
| 10 | F01420120 | ROS.M12 13X 36X2,5 U6593 ZN | WASHER | RONDELLE | SCHEIBE | |
| 11 | B01300463 | BUSSOLA 12.5X20X10 | BUSH | DOUILLE | KOMPASS | |
| 12 | B00920412 | DADO M12X1,75 D985 8 ZN | NUT | ECROU | SELBSTSICHERNDE MUTTER M12-5S | |
| 13 | B0C004692 | SOSTEGNO SUPERIORE SX | LEFT UPPER SUPPORT | SUPPORT SUPERIEUR GAUCHE | HALTER OBEN LINKS | |
| 14 | B00180625 | VITE M6X1X 25 U5739 8.8ZN | SCREW | VIS | SCHRAUBE | |
| 15 | F01410037 | ROS.M6 6,4X12,5X1,6 U6592 ZN | WASHER | RONDELLE | BEILAGSCHEIBE 6 | |
| 16 | B00920106 | DADO M6X1 D985 8ZN | NUT | ECROU | SELBSTSICHERNDE MUTTER M6-5S | |
| 17 | B00180620 | VITE M6X1X20 U5739 8.8ZN | SCREW | VIS | SCHRAUBE | |
| 18 | F01410037 | ROS.M6 6,4X12,5X1,6 U6592 ZN | WASHER | RONDELLE | BEILAGSCHEIBE 6 | |
| 19 | B00920106 | DADO M6X1 D985 8ZN | NUT | ECROU | SELBSTSICHERNDE MUTTER M6-5S | |
| 20 | B01800082 | SILENT BLOCK 30X30-M8X25 | SILENT BLOCK 30X30-M8X20 | SILENT BLOCK 30X30-M8X20 | SILENTBLOCK 30X30-M8X20 | |
| 21 | B00920208 | DADO M8X1 D985 8ZN | NUT M8X1 D985 8ZN | ECROU | SELBSTSICHERNDE MUTTER M8-5S | |
| 22 | F01410051 | ROS.M8 8,4X 17X1,6 U6592 ZN | WASHER M8 8,4X17X1,6 U6592 ZN | RONDELLE | SCHEIBE | |
| 23 | B0C100002 | SOSTEGNO CENTRALE | CENTRAL SUPPORT | SUPPORT CENTRAL | ANSCHLUSS ZENTRAL | |
| 24 | B00180625 | VITE M6X1X 25 U5739 8.8ZN | SCREW | VIS | SCHRAUBE | |
| 25 | F01410037 | ROS.M6 6,4X12,5X1,6 U6592 ZN | WASHER | RONDELLE | BEILAGSCHEIBE 6 | |
| 26 | B00920106 | DADO M6X1 D985 8ZN | NUT | ECROU | SELBSTSICHERNDE MUTTER M6-5S | |
| 27 | B00180620 | VITE M6X1X20 U5739 8.8ZN | SCREW | VIS | SCHRAUBE | |
| 28 | F01410037 | ROS.M6 6,4X12,5X1,6 U6592 ZN | WASHER | RONDELLE | BEILAGSCHEIBE 6 | |
| 29 | B00920106 | DADO M6X1 D985 8ZN | NUT | ECROU | SELBSTSICHERNDE MUTTER M6-5S | |
| 30 | B07S01850 | ATTACCO CHIUSURA | CLOSURE CONNECTION | ATTELAGE FERMETURE | VERSCHLUSSANSCHLUSS | |
| 31 | F01060202 | VITE M8X1,25X25 U5731 4.6ZN | SCR. M8X1,25X25 U5731 4.6ZN | VIS M8X1,25X25 U5731 4.6 | DUEBEL M8X1,25X25 U5731 4.6 ZN | TORNILLO M8X1,25X25 U5731 4.6 |
| 32 | F01420048 | ROS.M8 8,4X 24X 2 U6593 ZN | WASHER | RONDELLE | SCHEIBE | |
| 33 | B00920208 | DADO M8X1 D985 8ZN | NUT M8X1 D985 8ZN | ECROU | SELBSTSICHERNDE MUTTER M8-5S | |
| 34 | B0H100003 | MOLLA A GAS 1900N | GAS SPRING 1900N | RESSORT GAS 1900 N | GASFEDER FUR NETZ | |
| 35 | F01020114 | VITE M10X1,5X50 U5737 8.8ZN | SCR. M10X1,5X50 U5737 8.8ZN | VIS M10X 1,5X50 U5737 8.8 ZN | SCHRA.M10X 1,5X50 U5737 8.8 ZN | TORN. M10X 1,5X50 U5737 8.8 ZN |
| 36 | F01410062 | ROS.M10 10,5X 18X 2 U6592 ZN | WASHER M10 10,5X 18X 2 U6592 | RONDELLE M10 10,5X18X2 ZN | DICHTUNGSRING M10 10,5X18X2 ZN | RONDANA M10 10,5X18X2 ZN |
| 37 | B00710310 | DADO M10X1,25 U5588 6S ZN | NUT | ECROU | MUTTER M10-6S | |
| 38 | F01230202 | DADO M10X1,25 D985 8 ZN | SELF-LOCKING NUT | ECROU NYLSTOP | SELBSTSICHERNDE MUTTER M10-5S | |
| 39 | F01020114 | VITE M10X1,5X50 U5737 8.8ZN | SCR. M10X1,5X50 U5737 8.8ZN | VIS M10X 1,5X50 U5737 8.8 ZN | SCHRA.M10X 1,5X50 U5737 8.8 ZN | TORN. M10X 1,5X50 U5737 8.8 ZN |
| 40 | F01410062 | ROS.M10 10,5X 18X 2 U6592 ZN | WASHER M10 10,5X 18X 2 U6592 | RONDELLE M10 10,5X18X2 ZN | DICHTUNGSRING M10 10,5X18X2 ZN | RONDANA M10 10,5X18X2 ZN |
| 41 | B00710310 | DADO M10X1,25 U5588 6S ZN | NUT | ECROU | MUTTER M10-6S | |
| 42 | F01230202 | DADO M10X1,25 D985 8 ZN | SELF-LOCKING NUT | ECROU NYLSTOP | SELBSTSICHERNDE MUTTER M10-5S | |
| 43 | B07S01613 | ATTACCO CERNIERA CARTER SX | LEFT GUARD HINGE CONNECTION | ATTELAGE CHARNIERE CARTER GAUC | ANSCHLUSS CARTER LINKS | |
| 44 | B00523421 | VITE SPECIALE TTQST M12X35-8.8 | SPECIAL SCREW | VIS SPCIALE | SCHRAUBE TTQST M12X 35-8.8 | |
| 45 | F01410076 | ROS.M12 13X 20X2,0 U1749 ZN | WASHER | RONDELLE | SCHEIBE | |
| 46 | B00920412 | DADO M12X1,75 D985 8 ZN | NUT | ECROU | SELBSTSICHERNDE MUTTER M12-5S | |
| 47 | B0C005039 | SOSTEGNO SX CAPPELLO | CAP LEFT SUPPORT | SUPPORT GAUCHE CHAPEAU | HALTER LINKS DECKEL | |
| 48 | F01060202 | VITE M8X1,25X25 U5731 4.6ZN | SCR. M8X1,25X25 U5731 4.6ZN | VIS M8X1,25X25 U5731 4.6 | DUEBEL M8X1,25X25 U5731 4.6 ZN | TORNILLO M8X1,25X25 U5731 4.6 |
| 49 | F01420048 | ROS.M8 8,4X 24X 2 U6593 ZN | WASHER | RONDELLE | SCHEIBE | |
| 50 | B00920208 | DADO M8X1 D985 8ZN | NUT M8X1 D985 8ZN | ECROU | SELBSTSICHERNDE MUTTER M8-5S | |
| 51 | B01000010 | RIVETTO STR. 6X12 U9200A AL | RIVET | RIVET | ABREISSNIETEN 6X10 | |
| 52 | B0C004649 | CORPO CARTER SX 265 | LEFT CARDER BODY 265 | CORPS CARTER GAUCHE 265 | KOERPER CARTER LINKS 265 | |
| 53 | B0C004694 | CASSONE ROTOLO SX 265 | LEFT ROLLER BOX 265 | RESERVE ROULEAU GAUCHE 265 | ROLLEHALTER LINKS 265 | |
| 54 | B01000011 | RIVETTO STR. 6X12 U9200A AL | RIVET 6X12 U9200A AL | RIVET | ABREISSNIETEN 6X15 | |
| 55 | B07V00117 | MANIGL.01M20120D DITTA THENAR | HANDLE 01M20120D FROM THENAR | POIGNEE 01M20120D | GRIFF | |
| 56 | F01020431 | VITE M8X1,25X15 U5739 8.8ZN | SCR. M8X1,25X15 U5739 8.8ZN | VIS M 8X15 | SCHRAUBE M 8X15 | TORNILLO M 8X15 |
| 57 | F01410051 | ROS.M8 8,4X 17X1,6 U6592 ZN | WASHER M8 8,4X17X1,6 U6592 ZN | RONDELLE | SCHEIBE | |

# TAV_280

(*) 1, 8, 13, 43, 47, 52, 53, 59 = SINISTRO
LEFT
(**) 61, 62, 63, 64, 65, 66, 67, 68 = DESTRO
RIGHT

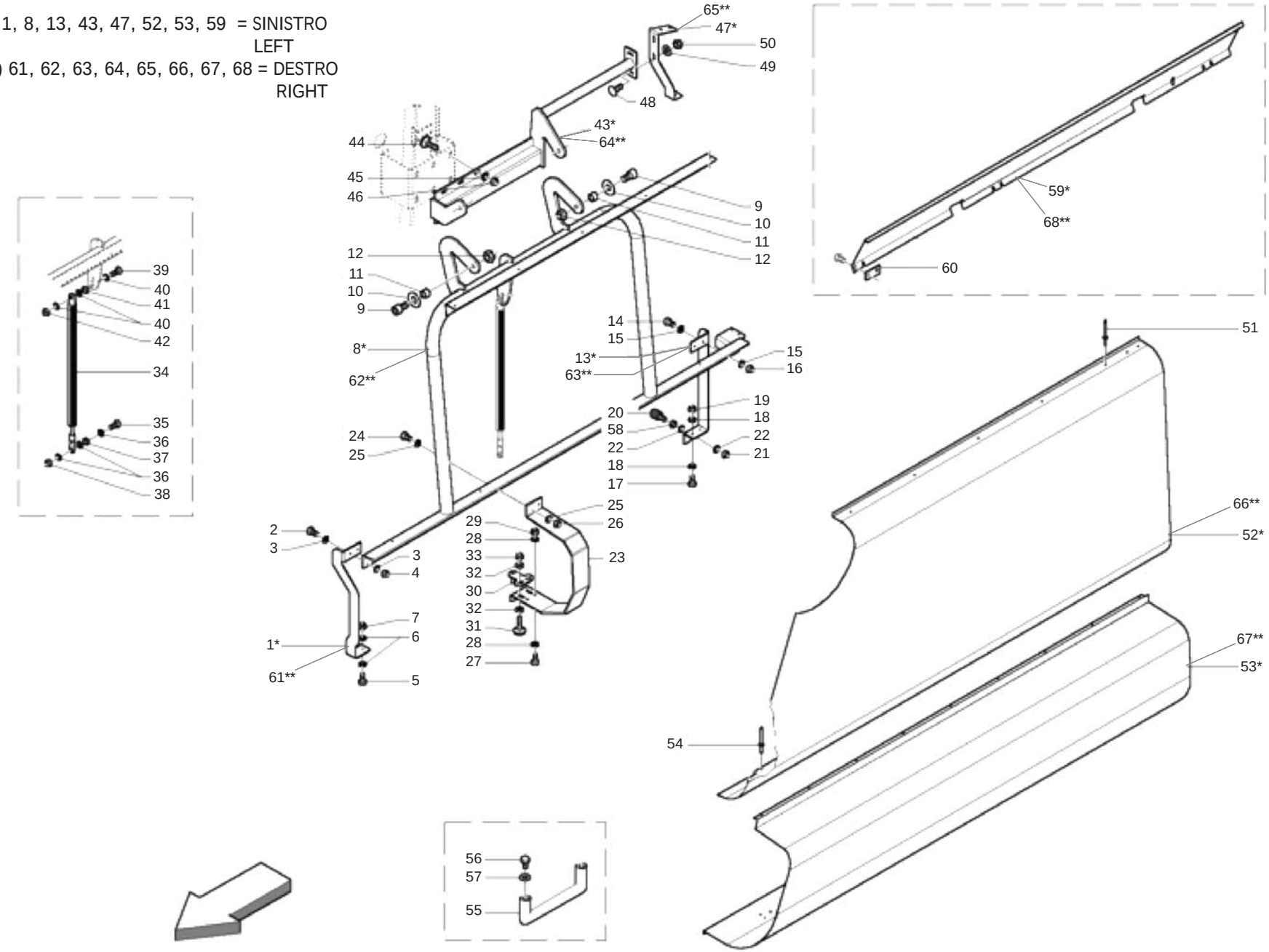

# CARTER LATERALI
## *SIDE CARTER*

TAV_280

| Pos. | Cod. | Descrizione | Description | Description | Benennung | Descripcion |
|---|---|---|---|---|---|---|
| 58 | B00710208 | DADO M 8X1,25 U5588 6.8 ZN | NUT | ECROU | MUTTER M8-6S | |
| 59 | B0C3P0042 | PROT.INT.SX CARTER LAT.265-280 | GUARD LEFT INNER PROTECTION | PROTECTION INT. GAUCHE CARTER | SCHUETZ LINKS CARTER | |
| 60 | B0C6P0112 | SOSTEGNO PROT. INTERNA | INNER PROTECTION SUPPORT | SUPPORT PROTECTION INTERIEURE | SCHUETZHALTER | |
| 61 | B0C005010 | SOSTEGNO ANT. DX | RIGHT FRONT SUPPORT | SUPPORT EN AVANT DROIT | HALTER VORNE RECHTS | |
| 62 | B07S01615 | TELAIO CARTER DX HT | HT RIGHT GUARD FRAME | CHASSIS CARTER DROIT HT | CARTER RAHMEN RECHTS HT | |
| 63 | B0C004693 | SOSTEGNO SUPERIORE DX | RIGHT UPPER SUPPORT | SUPPORT SUPERIEUR DROIT | HALTER OBEN RECHTS | |
| 64 | B07S01767 | ATTACCO CERNIERA CARTER DX | RIGHT GUARD HINGE COUPLING | ATTELAGE CHARNIERE CARTER DROI | SCHARNIER ANSCHLUSS | |
| 65 | B0C005040 | SOSTEGNO DX CAPPELLO | RIGHT CAP SUPPORT | SUPPORT DROIT CHAPEAU | HALTER RECHTS DECKEL | |
| 66 | B0C004650 | CORPO CARTER DX 265 | RIGHT CARTER BODY 265 | CORPS CARTER DROIT 265 | KOERPER CARTER RECHTS 265 | |
| 67 | B0C004695 | CASSONE ROTOLO DX 265 | RIGHT ROLLER BOX 265 | RESERVE ROULEAU DROIT 265 | ROLLEHALTER RECHTS 265 | |
| 68 | B0C3P0043 | PROT.INT.DX CARTER LAT.265-280 | SIDE GUARD 265-280 RIGHT INNER | PROT. INTERIEUR DROITE CARTER | SCHUETZ RECHTS CARTER | |

TAV_285

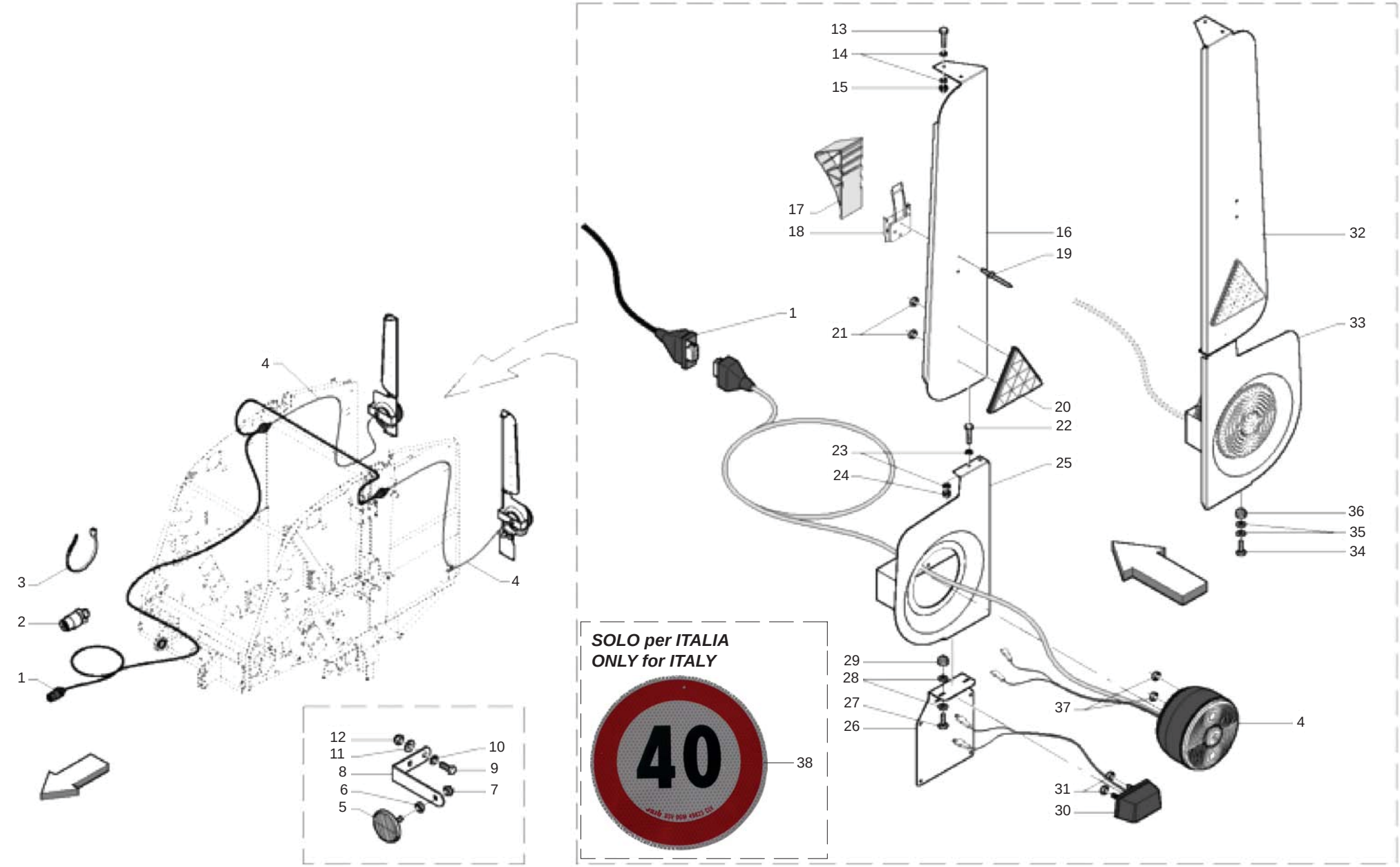
13
14
15
17
18
16
19
32
1
21
33
4
20
22
23
24
25
36
35
34
3
4
2
1
SOLO per ITALIA
ONLY for ITALY
40
38
29
28
27
26
37
4
31
30
12
11
8
6
5
10
9
7

# IMPIANTO LUCI + CUNEI
## *LIGHTS PLANT + CHOCKS*

TAV_285

| Pos. | Cod. | Descrizione | Description | Description | Benennung | Descripcion |
|---|---|---|---|---|---|---|
| 1 | B0E000137 | SPINA 7 POLI E CABLAGGIO EXTRE | 7-POLES PLUG AND WIRING HARNES | | | |
| 2 | B0E000011 | SPINA 7 POL.12V VST_018 REMPA | 7 POLE PLUG 12 V | GOUPILLE A 7 POLES 12V | 7 POL-STECKER 12 V | |
| 3 | F05150055 | FASCETTA LUMEFIX 3,6X180 | CLAMP LUMEFIX | BANDE LUMEFIX | MANSCHETTE LUMEFIX | |
| 4 | B0E000136 | FANALE POST. EXTREME | EXTREME BACK LAMP | FEU EN ARRIERE EXTREME | BELEUCHTUNG HINTEN EXTREME | |
| 5 | B0E000026 | CATADIOTRO ROTONDO BIANCO | WHITE ROUND RETROREFLECTOR | CATADIOPTRE ROND BLANC | RUNDER WEISSER RUECKSTRAHLER | |
| 6 | F01200220 | DADO M5X0,8 U5588 CL8 ZN | NUT M5X0,8 U5588 6.8ZN | ECROU 5 UNI 5588 6.8 ZN | MUTTER 5 UNI 5588 6.8 ZN | TUERCA 5 UNI 5588 6.8 ZN |
| 7 | B00920005 | DADO AUTOB.BASSO M 5-5S DIN985 | NUT | ECROU | SELBSTSICHERNDE MUTTER M5-5S | |
| 8 | B0C6P0034 | SOSTEGNO CATARIFRANGENTE | REFLEX REFLECTO SUPPORT | SUPPORT CATADIOPTRE | HALTER RUECKSTRAHLER | |
| 9 | B00180620 | VITE M6X1X20 U5739 8.8ZN | SCREW | VIS | SCHRAUBE | |
| 10 | F01410037 | ROS.M6 6,4X12,5X1,6 U6592 ZN | WASHER | RONDELLE | BEILAGSCHEIBE 6 | |
| 11 | F01420035 | ROS.M6 6,4X 18X1,6 U6593 ZN | WASHER | RONDELLE | SCHEIBE | |
| 12 | B00920106 | DADO M6X1 D985 8ZN | NUT | ECROU | SELBSTSICHERNDE MUTTER M6-5S | |
| 13 | B00180620 | VITE M6X1X20 U5739 8.8ZN | SCREW | VIS | SCHRAUBE | |
| 14 | F01410037 | ROS.M6 6,4X12,5X1,6 U6592 ZN | WASHER | RONDELLE | BEILAGSCHEIBE 6 | |
| 15 | B00920106 | DADO M6X1 D985 8ZN | NUT | ECROU | SELBSTSICHERNDE MUTTER M6-5S | |
| 16 | B0C004999 | CHIUSURA SUPERIORE SX | LEFT UPPER LOCK | FERMETURE SUPERIEURE GAUCHE | LINKER OBERER VERSCHLUSS | |
| 17 | B07V00070 | CUNEO D ARRESTO TIPO UK20K | WHEEL CHOCK | COIN D ARRET UK20K | UNTERLEGEKEIL | |
| 18 | B07V00071 | SOSTEGNO CUNEO TIPO HA20K | CHOCK SUPPORT TYPE HA20K | SUPPORT COIN HA20K | KEILHALTERUNG HA20K | |
| 19 | B01000011 | RIVETTO STR. 6X12 U9200A AL | RIVET 6X12 U9200A AL | RIVET | ABREISSNIETEN 6X15 | |
| 20 | B0E000025 | CATADIOTRO TRIANGOLARE ROSSO | RED TRIANGULAR RETROREFLECTOR | CATADIOPTRE TRIANGULAIRE ROUGE | DREIECKIGER ROTER RUECKSTRAHLE | |
| 21 | B00920106 | DADO M6X1 D985 8ZN | NUT | ECROU | SELBSTSICHERNDE MUTTER M6-5S | |
| 22 | B00180625 | VITE M6X1X 25 U5739 8.8ZN | SCREW | VIS | SCHRAUBE | |
| 23 | F01410037 | ROS.M6 6,4X12,5X1,6 U6592 ZN | WASHER | RONDELLE | BEILAGSCHEIBE 6 | |
| 24 | B00920106 | DADO M6X1 D985 8ZN | NUT | ECROU | SELBSTSICHERNDE MUTTER M6-5S | |
| 25 | B07S01635 | ATTACCO FANALE SX | LEFT LIGHT ATTACHMENT | ATTELAGE FANAL GAUCHE | LINKER LICHTANSCHLUSS | |
| 26 | B0C005037 | PORTA TARGA | PLATE HOLDER | PORTE-PLAQUE | SCHILDTRAEGER | |
| 27 | B00180620 | VITE M6X1X20 U5739 8.8ZN | SCREW | VIS | SCHRAUBE | |
| 28 | F01410037 | ROS.M6 6,4X12,5X1,6 U6592 ZN | WASHER | RONDELLE | BEILAGSCHEIBE 6 | |
| 29 | B00920106 | DADO M6X1 D985 8ZN | NUT | ECROU | SELBSTSICHERNDE MUTTER M6-5S | |
| 30 | B0E000138 | LUCE TARGA POST. EXTREME | EXTREME REAR PLATE LIGHT | LUMI RE PLAQUE EN ARRIERE | PLATTE BELEUCHTUNG EXTREME | |
| 31 | B00920005 | DADO AUTOB.BASSO M 5-5S DIN985 | NUT | ECROU | SELBSTSICHERNDE MUTTER M5-5S | |
| 32 | B0C005019 | CHIUSURA SUPERIORE DX | RIGHT UPPER LOCK | FERMETURE SUPERIEURE DROITE | RECHTER OBERER VERSCHLUSS | |
| 33 | B07S01634 | ATTACCO FANALE DX | RIGHT LIGHT ATTACHMENT | ATTELAGE FANAL DROIT | RECHTER LICHTANSCHLUSS | |
| 34 | B00180620 | VITE M6X1X20 U5739 8.8ZN | SCREW | VIS | SCHRAUBE | |
| 35 | F01410037 | ROS.M6 6,4X12,5X1,6 U6592 ZN | WASHER | RONDELLE | BEILAGSCHEIBE 6 | |
| 36 | B00920106 | DADO M6X1 D985 8ZN | NUT | ECROU | SELBSTSICHERNDE MUTTER M6-5S | |
| 37 | B00920005 | DADO AUTOB.BASSO M 5-5S DIN985 | NUT | ECROU | SELBSTSICHERNDE MUTTER M5-5S | |
| 38 | F20030261 | ETICH. LIMITE VELOCITA 40 | SPEED LIMIT 40 LABEL | | | |

**B0ZKPP0001 = B0ZK1P0001 + B0ZK1P0002**

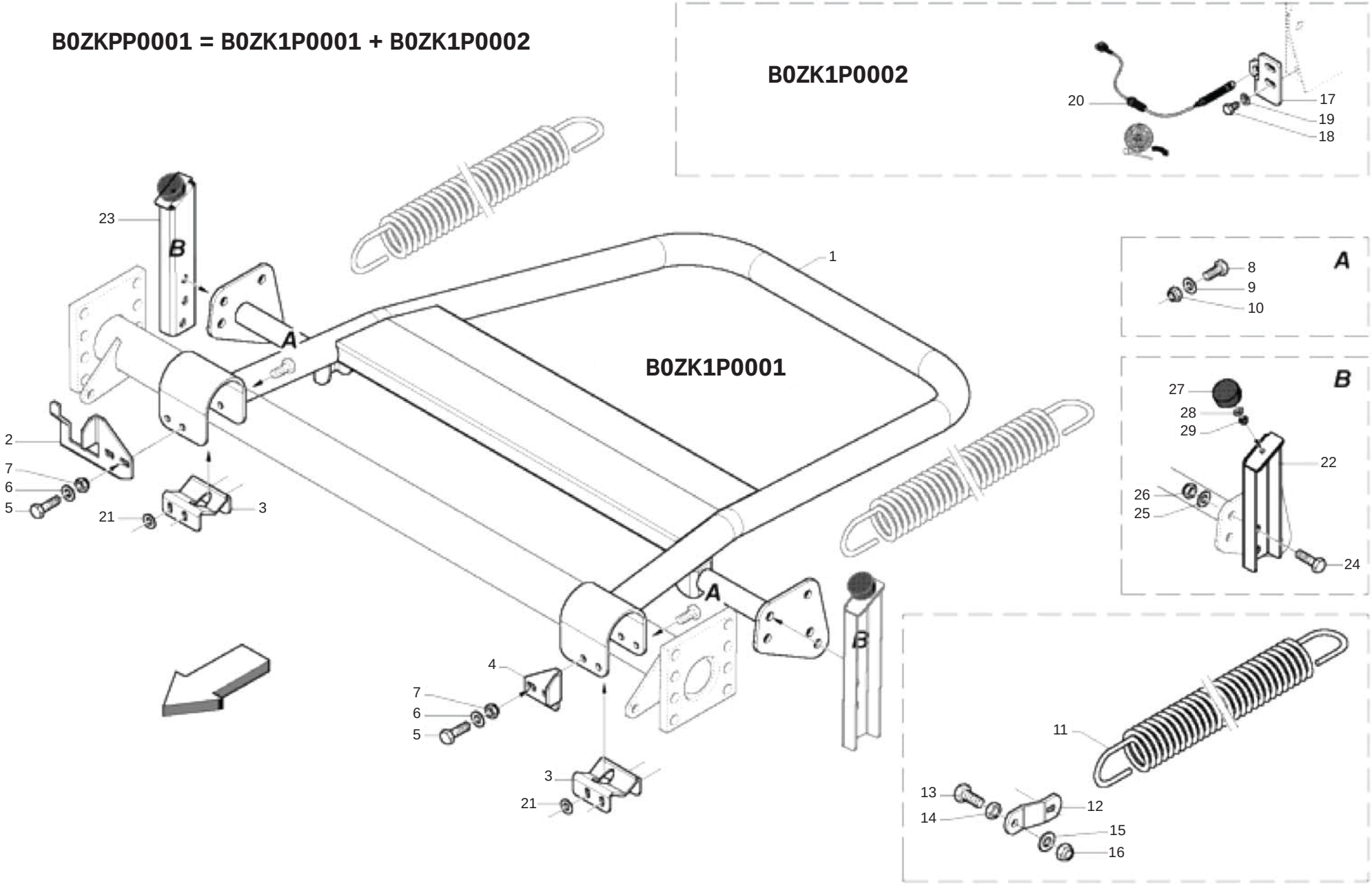

# ESPULSORE
## *EJECTOR*

TAV_290

| Pos. | Cod. | Descrizione | Description | Description | Benennung | Descripcion |
|---|---|---|---|---|---|---|
| 1 | B07S01806 | ESPULSORE | EJECTOR | EJECTEUR | BALLENAUSWERFER | |
| 2 | B0C6P0005 | CONTROSENSORE | COUNTER SENSOR | CONTRE-CAPTEUR | GEGENSENSOR | |
| 3 | B0C6P0226 | CAVALLOTTO | U BOLT | BOULON | U-BUEGEL | |
| 4 | B0C6P0006 | REGOLATORE | REGULATOR | REGULATEUR | EINSTELLER | |
| 5 | F01020516 | VITE M12X1,75X45 U5739 8.8ZN | SCR. M12X1,75X45 U5739 8.8ZN | VIS M12X1,75X45 U5739 8.8 ZN | SCHARAUBE M12X1,75X45 U5739 ZN | TORNIL.M12X1,75X45 U5739 8.8ZN |
| 6 | F01410076 | ROS.M12 13X 20X2,0 U1749 ZN | WASHER | RONDELLE | SCHEIBE | |
| 7 | B00920412 | DADO M12X1,75 D985 8 ZN | NUT | ECROU | SELBSTSICHERNDE MUTTER M12-5S | |
| 8 | F01020514 | VITE M12X1,75X40 U5739 8.8ZN | SCR. M12X1,75X40 U5739 8.8ZN | VIS M12X1,75X40 U5739 8.8ZN | SCHRA. M12X1,75X40 U5739 8.8ZN | TORN. M12X1,75X40 U5739 8,8ZN |
| 9 | F01410076 | ROS.M12 13X 20X2,0 U1749 ZN | WASHER | RONDELLE | SCHEIBE | |
| 10 | B00920412 | DADO M12X1,75 D985 8 ZN | NUT | ECROU | SELBSTSICHERNDE MUTTER M12-5S | |
| 11 | B01800090 | MOLLA TRAZ. 8 M=35 L=596 | SPRING | RESSORT | FEDER | |
| 12 | B0C6P0374 | ATTACCO MOLLA | SPRING ATTACHEMENT | ATTELAGE RESSORT | FEDERASCHLUSS | |
| 13 | F01020571 | VITE M16X2X50 U5739 8.8ZN | SCR. M16X2X50 U5739 8.8ZN | VIS M16X2X50 U5739 8.8 ZN | SCHRAUBE M16 X2X50 U5739 8.8ZN | TORNIL.M16 X2X50 U5739 8.8 ZN |
| 14 | B00710516 | DADO M16X 2 U5588 6.8 ZN | NUT M16X2 U5588 6.8 ZN | ECROU | MUTTER M16-6S | |
| 15 | F01410100 | ROS.M16 17X 30X 3 U6592 ZN | WASHER | RONDELLE | SCHEIBE | |
| 16 | B00920516 | DADO M16X 1,5 D985 6S ZN | NUT M16X1,5 D985 6S ZN | ECROU | SELBSTSICHERNDE MUTTER M16-5S | |
| 17 | B0C6P0004 | ATTACCO SENSORE ESPULSORE | EJECTOR SENSOR COUPLING | ATTELAGE CAPTEUR EJECTEUR | ANSCHLUSS AUSFERWERSENSOR | |
| 18 | F01020436 | VITE M8X1,25X20 U5739 8.8ZN | SCR. M8X1,25X20 U5739 8.8ZN | VIS M8X1,25X 20 U5739 8.8 ZN | SCHRAUBE M8X1,25X20U5739 8.8ZN | TORN. M8X1,25X20 U5739 8.8 ZN |
| 19 | F01410051 | ROS.M8 8,4X 17X1,6 U6592 ZN | WASHER M8 8,4X17X1,6 U6592 ZN | RONDELLE | SCHEIBE | |
| 20 | B0E0P0026 | SENSORE ESPULSORE | EJECTING SENSOR F_BUS | CAPTEUR JECTEUR F_BUS | SENSOR AUSWERFER LT | |
| 21 | F01420120 | ROS.M12 13X 36X2,5 U6593 ZN | WASHER | RONDELLE | SCHEIBE | |
| 22 | B0C4P0185 | APPOGGIO SX ESPULSORE | APPOGGIO SX ESPULSORE. | | | |
| 23 | B0C4P0186 | APPOGGIO DX ESPULSORE | APPOGGIO DX ESPULSORE. | | | |
| 24 | F01020564 | VITE M16X2X35 U5739 8.8ZN | SCR. M16X2X35 U5739 8.8ZN | VIS M 16X35 | SCHRAUBE M 16X35 | TORNILLO M 16X35 |
| 25 | F01410100 | ROS.M16 17X 30X 3 U6592 ZN | WASHER | RONDELLE | SCHEIBE | |
| 26 | B00920516 | DADO M16X 1,5 D985 6S ZN | NUT M16X1,5 D985 6S ZN | ECROU | SELBSTSICHERNDE MUTTER M16-5S | |
| 27 | B07049749 | TAMPONE 50X21 M10 | BUMPER 50X21 M10 | TAMPON 50X21 M10 | PUFFER 50X21 M10 | |
| 28 | F01410062 | ROS.M10 10,5X 18X 2 U6592 ZN | WASHER M10 10,5X 18X 2 U6592 | RONDELLE M10 10,5X18X2 ZN | DICHTUNGSRING M10 10,5X18X2 ZN | RONDANA M10 10,5X18X2 ZN |
| 29 | F01230202 | DADO M10X1,25 D985 8 ZN | SELF-LOCKING NUT | ECROU NYLSTOP | SELBSTSICHERNDE MUTTER M10-5S | |

TAV_295

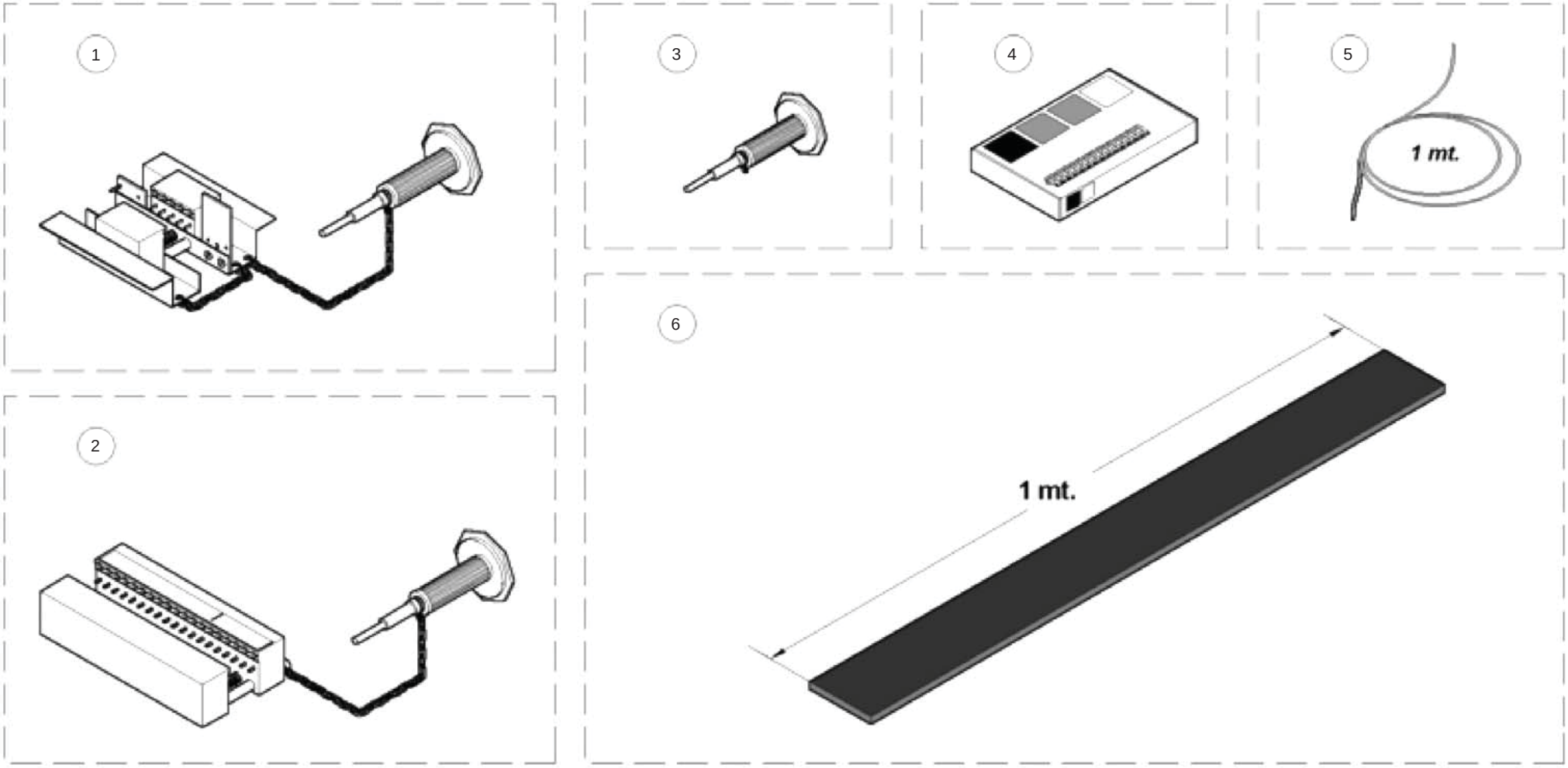

# GRAFFATURA
## *STAPLING DEVICE*

TAV_295

| Pos. | Cod. | Descrizione | Description | Description | Benennung | Descripcion |
|---|---|---|---|---|---|---|
| 1 | B0ZAP0025 | GRAFFATRICE MATO PROFI 5 | GRAFFATRICE MATO PROFI 5 . | | | |
| 2 | B0ZAP0026 | GRAFFATRICE MATO PROFI 19 | STAPLER MATO PROFI 19 . | | STAPLER MATO PROFI 19 | |
| 3 | B07U00049 | SEPAR.PUNCH H X VICE LACERS | PUNCH | POINCON | PUNZEN | |
| 4 | B09940018 | SCATOLA GRAFFE MATO HT-HTC | MATO LACINGS BOX | BOITE AGRAFFES MATO | SCHACHTEL MIT KLAMMERN MATO | |
| 5 | B09962005 | CAVETTO GIUNZIONE MT.1 | WIRE 2,5 PLAST.L.1MT | CABLE | KABEL 49 SCHNUREN | |
| 6 | B07600073 | SPEZZONE CINGHIA MT 01 | BELT PIECE L=1000 | PIECE DE COURROIE | GURT TEILSTUCK L=1000 | |

TAV_300

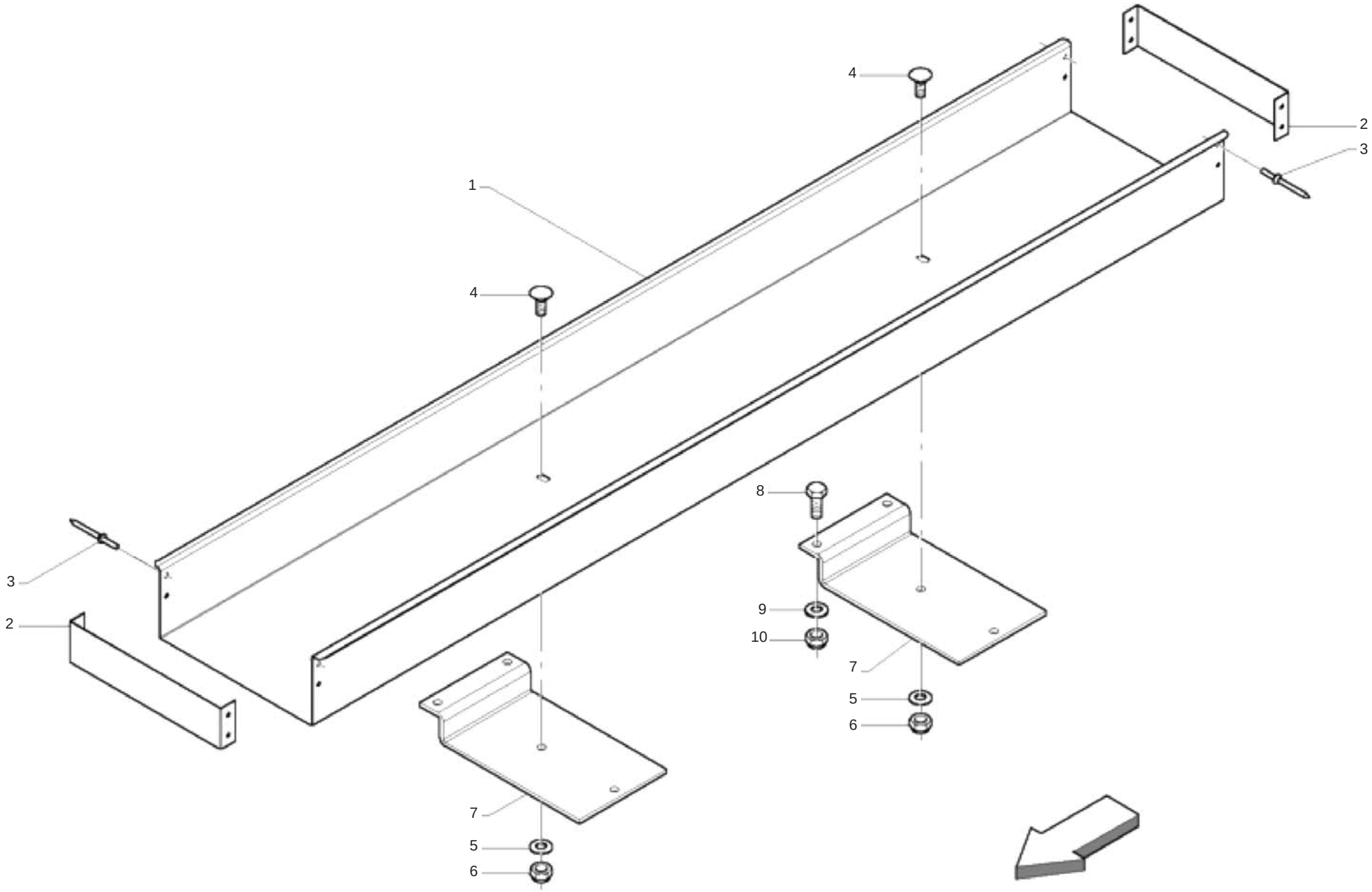




MASCHIO

cod. F07022223

# KIT CASSONETTO SUPPLEMENTARE PER BOBINE FILO
## *ADDITIONAL TWINE BOX KIT*

TAV_300

| Pos. | Cod. | Descrizione | Description | Description | Benennung | Descripcion |
|---|---|---|---|---|---|---|
| 1 | B0C005015 | CORPO CASSONE SUPP. 265-280 | ADDITIONAL BOX | CORPS BOITE SUPPLEMENTAIRE | ZUSATZKASTEN | |
| 2 | B0C005014 | FERMO TERMINALE | TERMINAL LOCK | ARRET | ENDANSCHLAG | |
| 3 | B01000010 | RIVETTO STR. 6X12 U9200A AL | RIVET | RIVET | ABREISSNIETEN 6X10 | |
| 4 | B00321020 | VITE M10X1,5 X 30 U5731 4.6ZN | SCREW | VIS | SCHRAUBE VERZINKT TTQST M10X20 | |
| 5 | F01410062 | ROS.M10 10,5X 18X 2 U6592 ZN | WASHER M10 10,5X 18X 2 U6592 | RONDELLE M10 10,5X18X2 ZN | DICHTUNGSRING M10 10,5X18X2 ZN | RONDANA M10 10,5X18X2 ZN |
| 6 | F01230202 | DADO M10X1,25 D985 8 ZN | SELF-LOCKING NUT | ECROU NYLSTOP | SELBSTSICHERNDE MUTTER M10-5S | |
| 7 | B0C004685 | SOSTEGNO CASSONE SPAGO | TWINE BOX HOLDER | SUPPORT RESERVOIR FICELLE | SCHNURKASTENHALTERUNG | |
| 8 | B00181030 | VITE M10X1,5 X 30 U5739 8.8ZN | SCREW | VIS | SCHRAUBE | |
| 9 | F01410062 | ROS.M10 10,5X 18X 2 U6592 ZN | WASHER M10 10,5X 18X 2 U6592 | RONDELLE M10 10,5X18X2 ZN | DICHTUNGSRING M10 10,5X18X2 ZN | RONDANA M10 10,5X18X2 ZN |
| 10 | F01230202 | DADO M10X1,25 D985 8 ZN | SELF-LOCKING NUT | ECROU NYLSTOP | SELBSTSICHERNDE MUTTER M10-5S | |

TAV_305

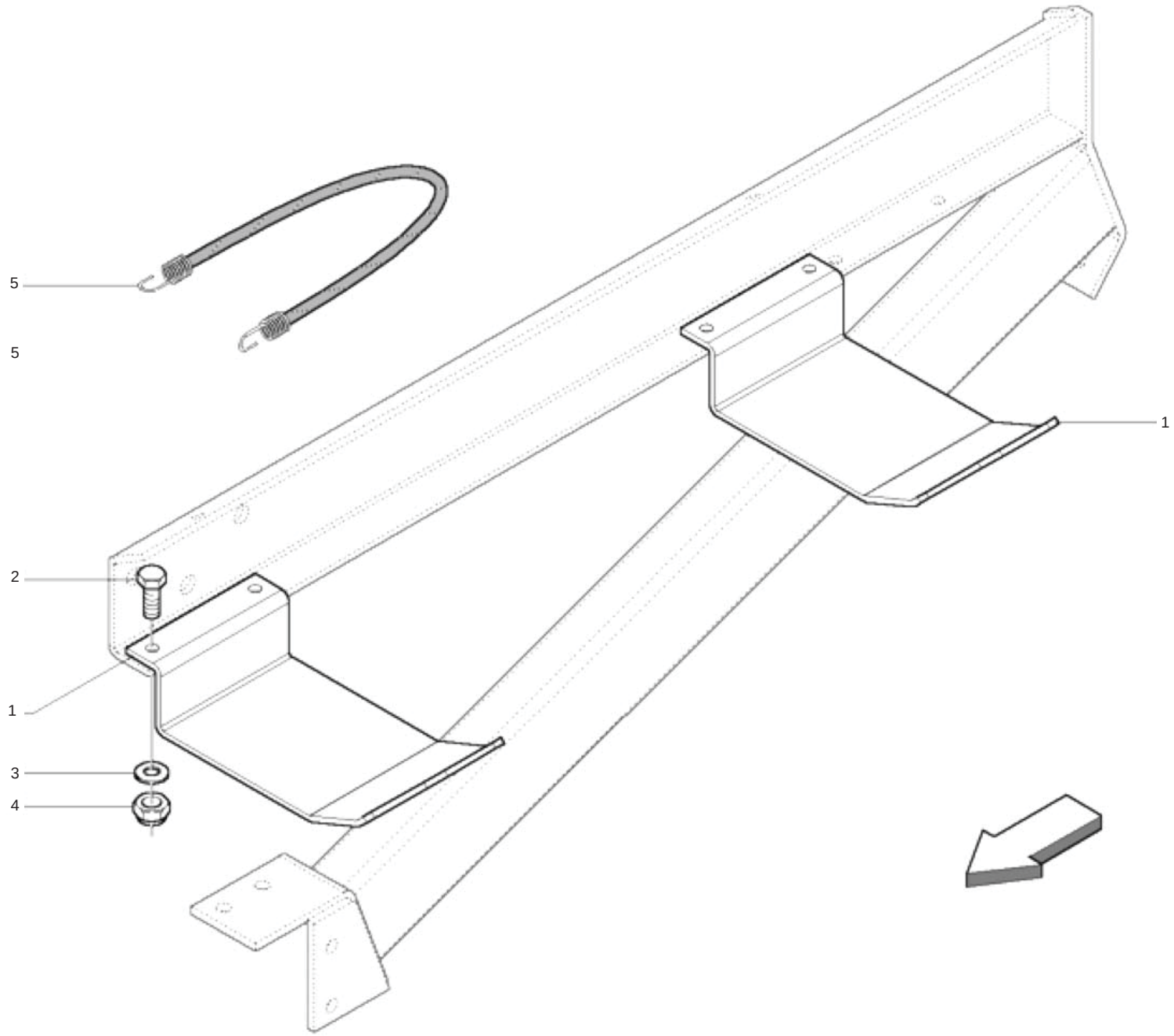

# KIT STAFFE SUPPLEMENTARI PER ROTOLO RETE
## *ADDITIONAL NET SUPPORT KIT*

TAV_305

| Pos. | Cod. | Descrizione | Description | Description | Benennung | Descripcion |
|---|---|---|---|---|---|---|
| 1 | B0C100013 | SOSTEGNO RETE | NET SUPPORT | SUPPORT FILET | NETZHALTER | |
| 2 | B00181030 | VITE M10X1,5 X 30 U5739 8.8ZN | SCREW | VIS | SCHRAUBE | |
| 3 | F01410062 | ROS.M10 10,5X 18X 2 U6592 ZN | WASHER M10 10,5X 18X 2 U6592 | RONDELLE M10 10,5X18X2 ZN | DICHTUNGSRING M10 10,5X18X2 ZN | RONDANA M10 10,5X18X2 ZN |
| 4 | F01230202 | DADO M10X1,25 D985 8 ZN | SELF-LOCKING NUT | ECROU NYLSTOP | SELBSTSICHERNDE MUTTER M10-5S | |
| 5 | B07V00107 | FUNE ELASTICA CON GANCI | ELASTIC CABLE WITH HOOKS | CABLE ELASTIQUE AVEC CROCHETS | ELASTISCHES SEIL MIT HAKEN | |

TAV_310

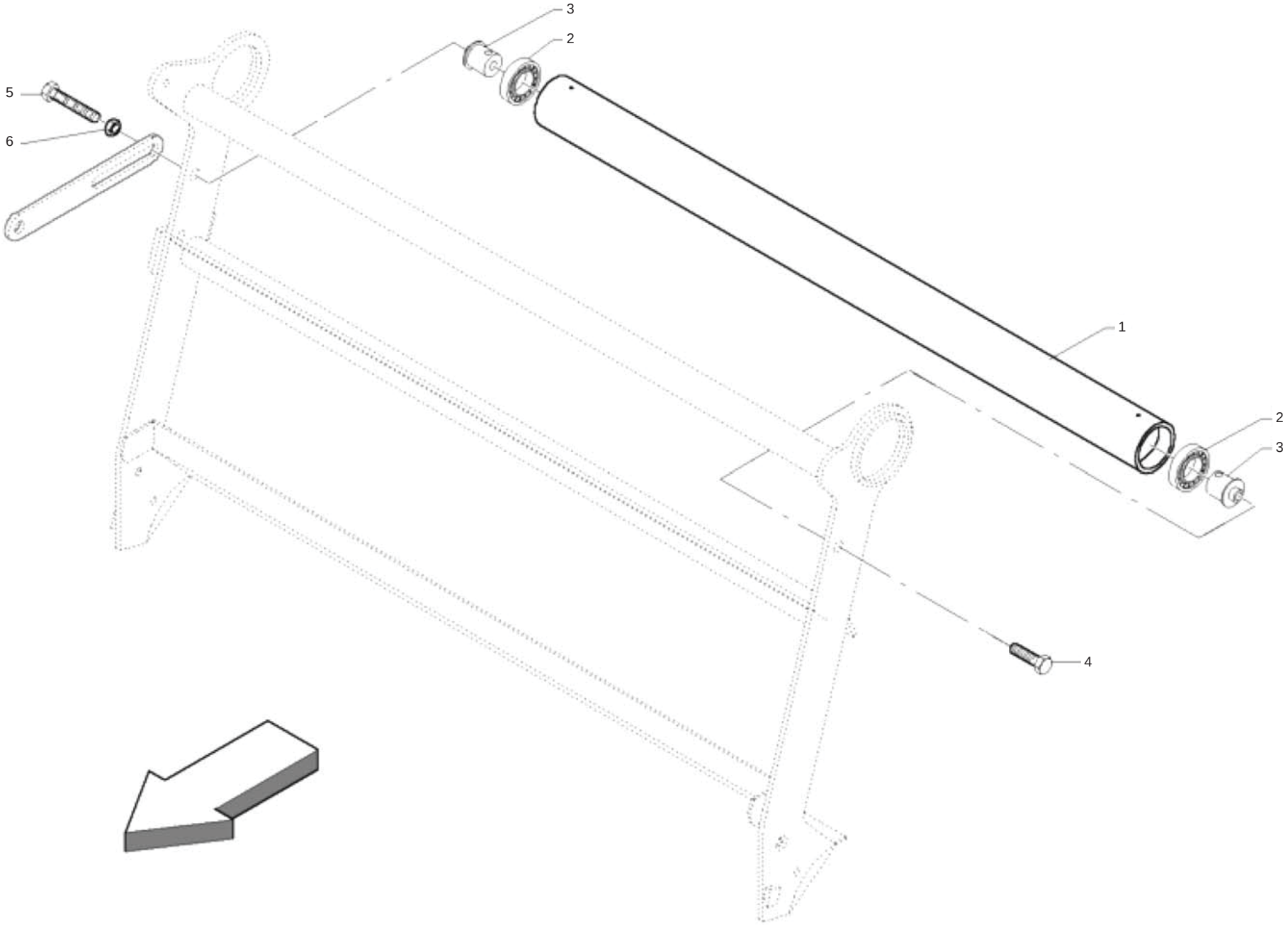

# KIT FILM PLASTICO
## *PLASTIC FILM KIT*

TAV_310

| Pos. | Cod. | Descrizione | Description | Description | Benennung | Descripcion |
|---|---|---|---|---|---|---|
| 1 | B03500048 | RULLO FOLLE | IDLE ROLLER | ROULEAU FOU | UMLENKWALZE | |
| 2 | B02040002 | CUSCINETTO 6307-2RS CAT.KST004 | BEARING | ROULEMENT | LAGER 6307-2RS | |
| 3 | B03500047 | PERNO RULLO FOLLE | IDLE ROLLER GUDGEON | TOURILLON ROULEAU FOU | STIFT UMLENKWALZE | |
| 4 | F01020512 | VITE M12X1,75X35 U5739 8.8ZN | SCR. M12X1,75X35 U5739 8.8ZN | VIS M12X1,75X35 5739 8.8 ZN | SCHR. M12X1,75X35 5739 8.8 ZN | TORN. M12X1,75X35 5739 8.8 ZN |
| 5 | F01020524 | VITE M12X1,75X90 U5739 8.8ZN | SCR. M12X1,75X90 U5739 8.8ZN | | | |
| 6 | F01200293 | DADO M12X1,75 U5588 CL8 ZN | NUT M12X1,75 U5588 6S ZN | ECROU M12X1,75 U5588 6S ZN | MUTTER M12X1,75 U5588 6S ZN | TUERCA M12X1,75 U5588 6S ZN |

# TAV_355

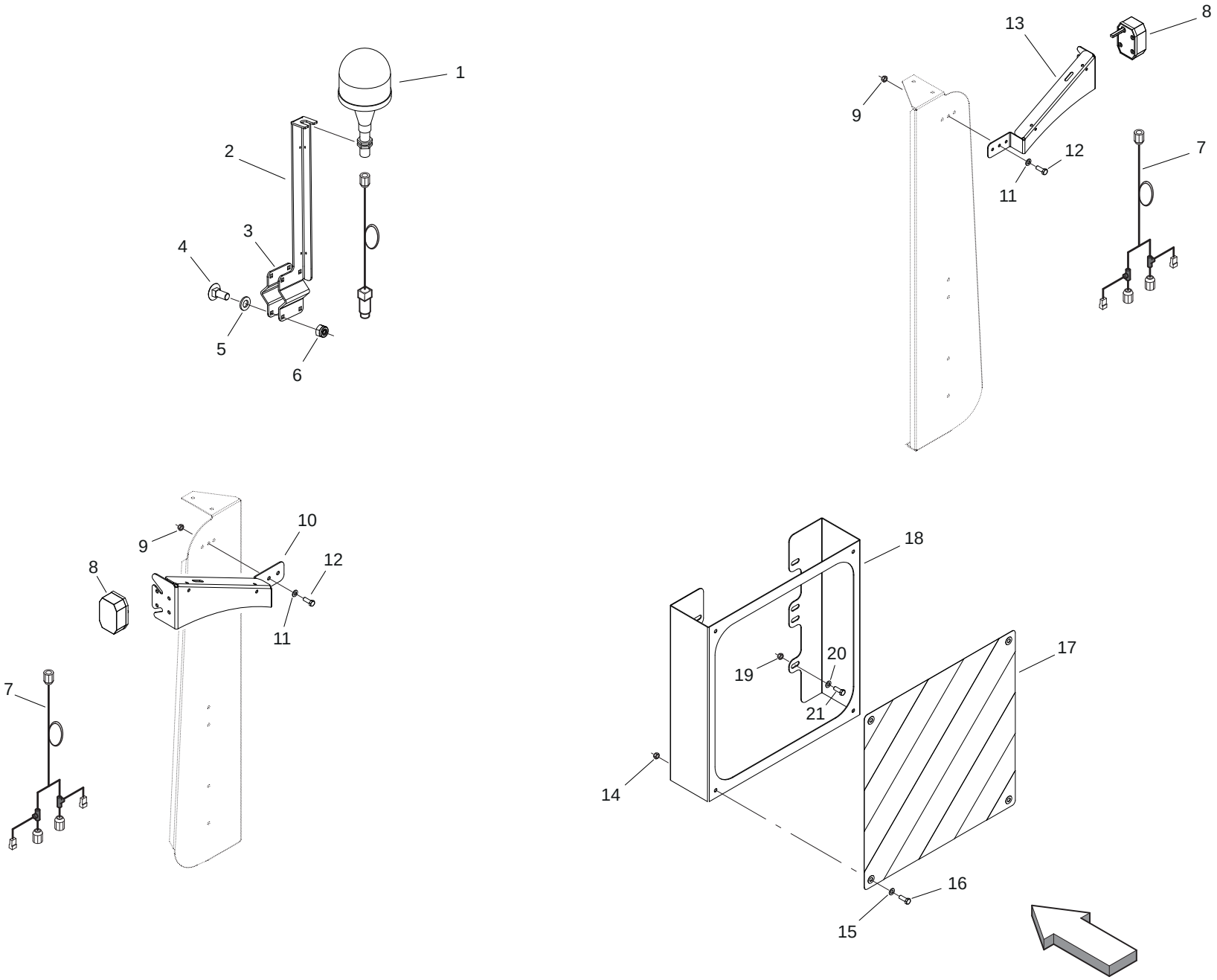

# KIT LAMPEGGIANTE + ECCEZIONALE
## *FLASHING + EXCEPTIONAL KIT*

TAV_355

| Pos. | Cod. | Descrizione | Description | Description | Benennung | Descripcion |
|---|---|---|---|---|---|---|
| 1 | B0E0P0153 | LAMPEGGIANTE | FLASHING | | | |
| 2 | B0C1P1671 | PIASTRA SUPP.LAMPEGGIANTE 265 | PLATE SUPPORT BLINKING 265 | | | |
| 3 | B0C1P1672 | PIASTRA DI CHIUSURA | CLOSING PLATE | | | |
| 4 | F01060101 | VITE M12X1,75X30 U5731 8.8ZN | NUT M12X1,75X 30 U5732 4.6 ZN | | | |
| 5 | F01410076 | ROS.M12 13X 20X2,0 U1749 ZN | WASHER | RONDELLE | SCHEIBE | |
| 6 | F01230059 | DADO M12X1,75 D982 8ZN | LOCK-NUT M12X1,75 D982 8ZN | ECR.AUTO-FREI.M12X1,75 ZN | SICHERUNGMUT.M12X1,75 D982 8ZN | TUER.DE SEGUR.M12X1,75 D982 ZN |
| 7 | F05200818 | CABL LUCE INGOMBRO PER 265 | WIRING LIGHT OBSTRUCT.FOR 265 | | | |
| 8 | F05011803 | LUCE INGOMBRO FLEXILED | LIGHT OBSTRUCTION FLEXILED | | | |
| 9 | F01230184 | DADO M6X1 D985 8ZN | NUT M6X1 D985 8ZN | | | |
| 10 | B0C1P1617 | STAFFA LUCI INGOMBRO SX | BRACKET LIGHTS OBSTRUCT.LEFT | | | |
| 11 | F01410037 | ROS.M6 6,4X12,5X1,6 U6592 ZN | WASHER | RONDELLE | BEILAGSCHEIBE 6 | |
| 12 | F01020404 | VITE M6X1X20 U5739 8.8ZN | SCREW M6X1X20 U5739 8.8ZN | VIS M6X1X20 U5739 8.8ZN | SCHRAUBE M6X1X20 U5739 8.8ZN | TORNILLO M6X1X20 U5739 8.8ZN |
| 13 | B0C1P1618 | STAFFA LUCI INGOMBRO DX | BRACKET LIGHTS OBSTRUCT.RIGHT | | | |
| 14 | F01200244 | DADO M8X1,25 U5588 CL8 ZN | NUT M8X1,25 U5588 6.8ZN | ECROU M8 X1,25 U5588 6.8 ZN | MUTTER M8 X1,25 U5588 6.8 ZN | TUERCA M8 X1,25 U5588 6.8 ZN |
| 15 | F01410051 | ROS.M8 8,4X 17X1,6 U6592 ZN | WASHER M8 8,4X17X1,6 U6592 ZN | RONDELLE | SCHEIBE | |
| 16 | F01020432 | VITE M8X1,25X16 U5739 8.8ZN | SCR. M8X1,25X16 U5739 8.8ZN | VIS M8 X1,25X16 U5739 8.8 ZN | SCHRAUBE M8X1,25X16U5739 8.8ZN | TORNILLO M8X1,25X16U5739 8.8ZN |
| 17 | B0E0P0204 | PANNELLO POST RB 50X50 | REAR PANEL RB 50X50 | | | |
| 18 | B0C1P1615 | SUPPORTO SEGNALE INGOMBRO 265 | SUPPORT SIGNAL OBSTRUCTION 265 | | | |
| 19 | F01230045 | DADO M10X1,5 D982 6ZN | NUT M10X1,5 D982 6ZN | ECROU AUTO-FREINES M10X1,5D982 | SICHERUNGSMUTT.M10X1,5 D982 ZN | TUERCA DE SEGUR.M10X1,5 D982Z |
| 20 | F01410062 | ROS.M10 10,5X 18X 2 U6592 ZN | WASHER M10 10,5X 18X 2 U6592 | RONDELLE M10 10,5X18X2 ZN | DICHTUNGSRING M10 10,5X18X2 ZN | RONDANA M10 10,5X18X2 ZN |
| 21 | F01020472 | VITE M10X1,5X25 U5739 8.8ZN | SCR. M10X1,5X25 U5739 8.8ZN | VIS M10X1,5X25 U5739 8.8 ZN | SCHRAUBE M10X1,5X25 U5739 8.8 | TORNILLO 10X25 U5739 8.8 ZN |

# TAV_315

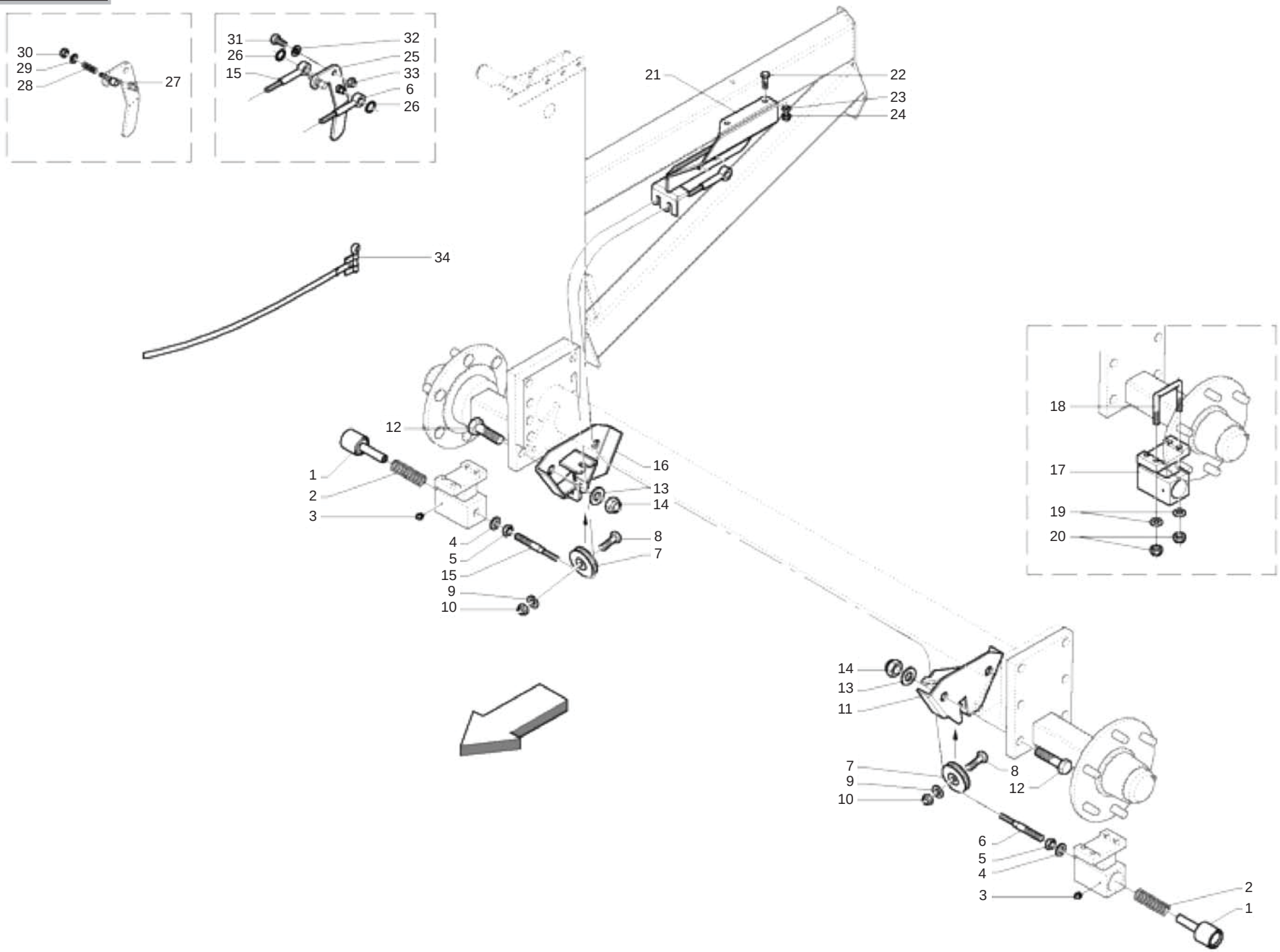




MASCHIO

cod. F07022223

# DISPOSITIVO DI STAZIONAMENT MECCANICO
## *MECHANICAL PARKING DEVICE*

TAV_315

| Pos. | Cod. | Descrizione | Description | Description | Benennung | Descripcion |
|---|---|---|---|---|---|---|
| 1 | B013P0003 | PERNO | PIN | TOURILLON | ZAPFEN | |
| 2 | B01830231 | MOLLA | SPRING | RESSORT | FEDER | |
| 3 | B04200610 | INGRASS.A SFERE M6X1 LUNGO | GREASE NIPPLE | GRAISSEUR HYDRAULIQUE | GERADER SCHMIERNIPPEL M6X1 | |
| 4 | F01420060 | ROS.M10 10,5X 30X2,5 U6593 ZN | WASHER | RONDELLE | SCHEIBE | |
| 5 | B00710310 | DADO M10X1,25 U5588 6S ZN | NUT | ECROU | MUTTER M10-6S | |
| 6 | B07J00011 | CAVO DI COM. 4 | CONTROL CABLE DIAM. 4 | CABLE DE COMMANDE DIAM. 4 | STEUERUNGSKABEL | |
| 7 | B038P0001 | CARRUCOLA PER FUNE | PULLEY FOR ROPE | POULIE | LAUFROLLE | |
| 8 | F01020114 | VITE M10X1,5X50 U5737 8.8ZN | SCR. M10X1,5X50 U5737 8.8ZN | VIS M10X 1,5X50 U5737 8.8 ZN | SCHRA.M10X 1,5X50 U5737 8.8 ZN | TORN. M10X 1,5X50 U5737 8.8 ZN |
| 9 | F01410062 | ROS.M10 10,5X 18X 2 U6592 ZN | WASHER M10 10,5X 18X 2 U6592 | RONDELLE M10 10,5X18X2 ZN | DICHTUNGSRING M10 10,5X18X2 ZN | RONDANA M10 10,5X18X2 ZN |
| 10 | F01230202 | DADO M10X1,25 D985 8 ZN | SELF-LOCKING NUT | ECROU NYLSTOP | SELBSTSICHERNDE MUTTER M10-5S | |
| 11 | B07SP0006 | ATTACCO CARRUCOLA SX | LEFT PULLEY ATTACHMENT | ATTELAGE POULIE GAUCHE | ANSCHLUSS LAUFROLLE LINKS | |
| 12 | F01020986 | VITE M20X2,5X60 U5737 8.8 ZN | SCREW M20X2,5X60 U5737 8.8 ZN | HELI. M20X2,5X60 U5737 8.8 ZN | SCHRA. M20X2,5X60 U5737 8.8 ZN | TORN. M20X2,5X60 U5737 8.8 ZN |
| 13 | F01410124 | ROS.M20 21X 37X 3 U6592 ZN | WASHER M20 21X 37X 3 U6592 ZN | RONDEL.M20 21X 37X 3 U6592 ZN | MUTTER M20 21X 37X 3 U6592 ZN | ARANDELA M20 21X37X3 U6592 ZN |
| 14 | F01230259 | DADO AUTOB.BASSO M20 8 D985 ZN | NUT | ECROU | SELBSTSICHERNDE MUTTER M20-5S | |
| 15 | B07J00010 | CAVO D1 COM. 4 | CONTROL CABLE DIAM. 4 | CABLE DE COMMANDE DIAM.4 | STEUERUNGSKABEL | |
| 16 | B07SP0005 | ATTACCO CARRUCOLA DX | RIGHT PULLEY ATTACHMENT | ATTELAGE POULIE DROIT | ANSCHLUSS LAUFROLLE RECHTS | |
| 17 | B07SP0004 | SOSTEGNO CORSOIO | SLIDER SUPPORT | SUPPORT COULISSE | HALTER | |
| 18 | B00500081 | CAVALLOTTO 60X60 M12 ZINCATO | U-BOLT 60X60 M12 | BOULON 60X60 M12 | BUEGELBOLZEN 60X60 M12 | |
| 19 | F01410076 | ROS.M12 13X 20X2,0 U1749 ZN | WASHER | RONDELLE | SCHEIBE | |
| 20 | B00920412 | DADO M12X1,75 D985 8 ZN | NUT | ECROU | SELBSTSICHERNDE MUTTER M12-5S | |
| 21 | B07SP0008 | ATTACCO MANIGLIA | HANDLE ATTACHMENT | | | |
| 22 | B00191040 | VITE M10X1,5 X 40 U5737 8.8ZN | SCREW | VIS | SCHRAUBE | |
| 23 | F01410062 | ROS.M10 10,5X 18X 2 U6592 ZN | WASHER M10 10,5X 18X 2 U6592 | RONDELLE M10 10,5X18X2 ZN | DICHTUNGSRING M10 10,5X18X2 ZN | RONDANA M10 10,5X18X2 ZN |
| 24 | F01230202 | DADO M10X1,25 D985 8 ZN | SELF-LOCKING NUT | ECROU NYLSTOP | SELBSTSICHERNDE MUTTER M10-5S | |
| 25 | B07SP0007 | MANIGLIA CON SPINA | HANDLE WITH PIN | | | |
| 26 | F02050651 | ANELLO E. DE 10X 1 U7435 C70 | SEEGER RING ARR.10 U7435-75 | SEEGER ARR. 10 UNI 7435-75 | SEEGERING ARR.10 UNI 7435-75 | ANILLO ARR.10 UNI 7435-75 |
| 27 | B005P0001 | SPINA DI SICUREZZA | SAFETY PIN | EPINE DE SURETE | SICHERHEITSSTIFT | |
| 28 | B01821993 | MOLLA | SPRING | RESSORT | FEDER | |
| 29 | F01420048 | ROS.M8 8,4X 24X 2 U6593 ZN | WASHER | RONDELLE | SCHEIBE | |
| 30 | B00920208 | DADO M8X1 D985 8ZN | NUT M8X1 D985 8ZN | ECROU | SELBSTSICHERNDE MUTTER M8-5S | |
| 31 | F01020152 | VITE M12X1,75X40 U5737 8.8ZN | SCR. M12X1,75X40 U5737 8.8ZN | VIS M12X1,75X40 U5737 8.8 ZN | SCHRAUBE M12X1,75X40U57378.8ZN | TORNIL.M12X1,75X40 U5737 8.8ZN |
| 32 | F01410076 | ROS.M12 13X 20X2,0 U1749 ZN | WASHER | RONDELLE | SCHEIBE | |
| 33 | B00920412 | DADO M12X1,75 D985 8 ZN | NUT | ECROU | SELBSTSICHERNDE MUTTER M12-5S | |
| 34 | B0E000061 | FASCETTA A COPPIGLIA | STEEL HOSE CLAMP | | | |

TAV_320

**SOLO ITALIA**
**ONLY ITALY**

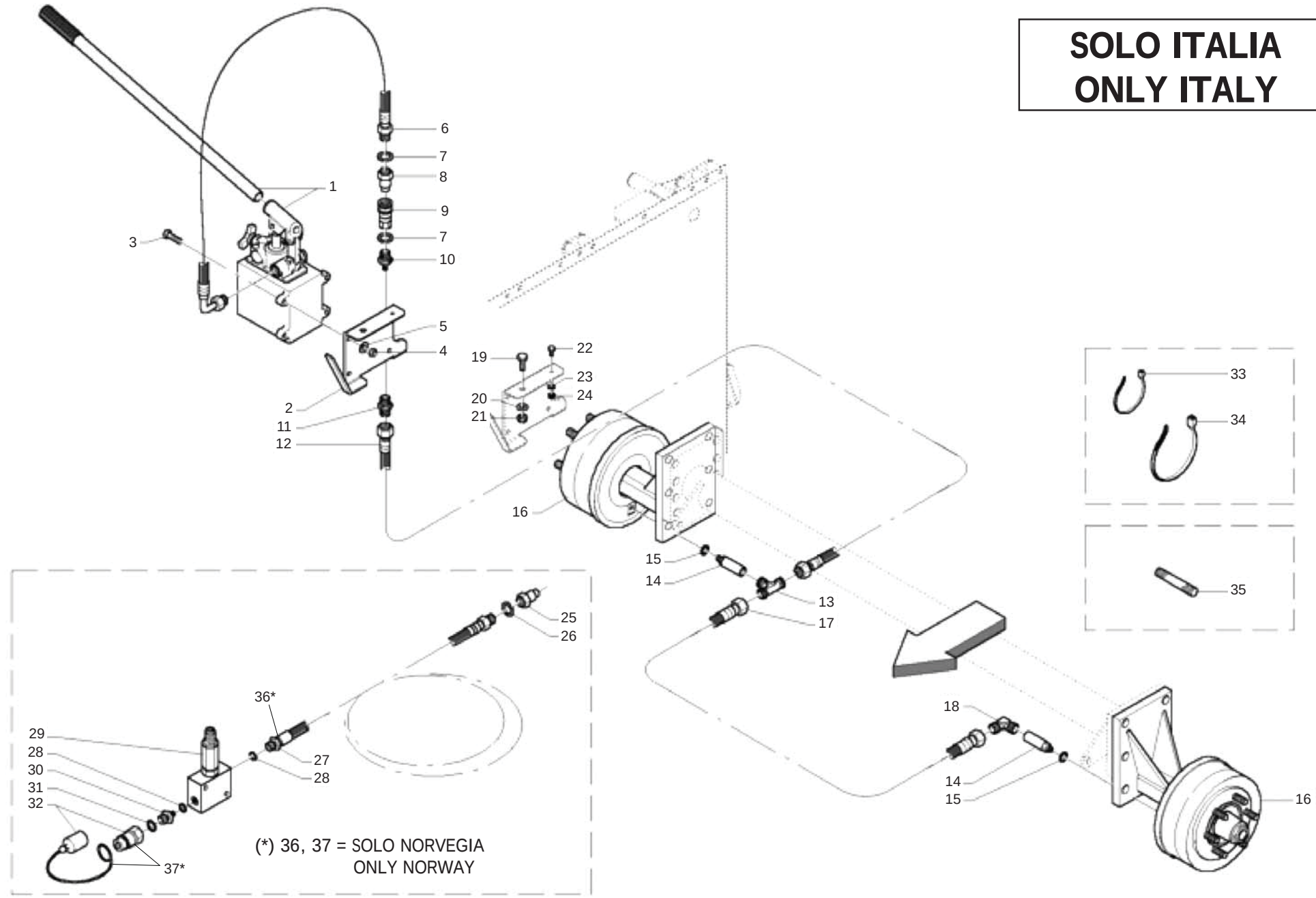




MASCHIO

cod. F07022223

# DISPOSITIVO STAZIONAMENTO IDRAULCO (CUT)
## *HYDRAULIC PARKING DEVICE (CUT)*

TAV_320

| Pos. | Cod. | Descrizione | Description | Description | Benennung | Descripcion |
|---|---|---|---|---|---|---|
| 1 | B0H400107 | POM.MANO HPT 12 CAPACITA SERBA | HAND PUMP HPT12C | POMPE A MAIN HPT | HANDPUMPE HPT12C | |
| 2 | B0C4P0002 | SOSTEGNO POMPA A MANO | MANUAL PUMP SUPPORT | SUPPORT POMPE A MAIN | EISENWINKEL | |
| 3 | F01020065 | VITE M 8X1,25X 30 U5737 8.8ZN | SCREW M 8X1,25X 30 U5737 8.8Z | | | |
| 4 | F01410051 | ROS.M8 8,4X 17X1,6 U6592 ZN | WASHER M8 8,4X17X1,6 U6592 ZN | RONDELLE | SCHEIBE | |
| 5 | B00920208 | DADO M8X1 D985 8ZN | NUT M8X1 D985 8ZN | ECROU | SELBSTSICHERNDE MUTTER M8-5S | |
| 6 | B0H000206 | TUBO R16 1 4 STRONGER 1 L410 | HYDR HOSE WITH FITTING L=410 | TUYAU HYDRAULIQUE AVEC RACCORD | HYDRHES ROHR L=410 | |
| 7 | F01440094 | RONDELLA ALLUMINIO D10 | WASHER D10 ALUMINIUM | RONDELLE D10 AL | SCHIEBE D10 ALUMIN ARANDELA D10 AL | |
| 8 | B0H000207 | INNESTO RAPIDO 1 4 MASCHIO | FAST CLUTCH 1 4 MALE | EMBRAYAGE RAPIDE 1 4 MALE | KUPPLUNG 1 4 | |
| 9 | B0H000208 | INNESTO RAPIDO 1 4 FEMMINA | FAST CLUTCH 1 4 FEMALE | EMBRAYAGE RAPIDE 1 4 FEMELLE | KUPPLUNG 1 4 | |
| 10 | B0H000284 | RAC. I 10 TN126GG-10LR | I FITTING TN 126GG-10LR | RACCORD I 10 | KUPPLUNG I 10 HARKEN | |
| 11 | B0H000153 | RACC. I 10 SOLO CORPO RASTELLI | CONNECTION | RACCORD I 10 SEULEMENT CORPS | ANSCHLUSS I 10 | |
| 12 | B0H000033 | TUBO IDRAUL. L=1000 | HYDR. TUBE | TUYAU HYDRAULIQUE L=1000 | HYDR.SCHLAUCH L=1000 | |
| 13 | B0H000144 | RACCORDO T 10 TN96-10LR | UNION TEE 10 | RACCORD T | KUPPLUNG HARKE | |
| 14 | B0H000162 | MANICOTTO DI RACCORDO | FITTING SLEEVE | MANCHON DE RACCORD | ANSCHLUSS | |
| 15 | B01441415 | RONDELLA IN RAME 1 4 | WASHER | RONDELLE | BEILAGSCHEIBE 1 4 13X19X1,5 | |
| 16 | B07100031 | MOZZO CON FRENO SPRINTER NEW | HUB WITH BRAKE | MOYEU AVEC FREIN NOUVELLE SPR | RADACHSE MIT BREMSE SPRINTER | |
| 17 | B0H000091 | TUBO FLEX SAE 100 R1AT1 4L2050 | FLEXIBLE TUBE SAE 100 R1AT | TUYAU FLEXIBLE SAE 100 R1AT 1 | ROEHRE FLEX SAE 100 R1AT 1 4 | |
| 18 | B0H000086 | RACCORDO L 10 TN94-10LR | UNION L 10 | RACCORD L 10 | ANSCHLUSSSTUECK L 10 | |
| 19 | F01020472 | VITE M10X1,5X25 U5739 8.8ZN | SCR. M10X1,5X25 U5739 8.8ZN | VIS M10X1,5X25 U5739 8.8 ZN | SCHRAUBE M10X1,5X25 U5739 8.8 | TORNILLO 10X25 U5739 8.8 ZN |
| 20 | F01410062 | ROS.M10 10,5X 18X 2 U6592 ZN | WASHER M10 10,5X 18X 2 U6592 | RONDELLE M10 10,5X18X2 ZN | DICHTUNGSRING M10 10,5X18X2 ZN | RONDANA M10 10,5X18X2 ZN |
| 21 | F01230202 | DADO M10X1,25 D985 8 ZN | SELF-LOCKING NUT | ECROU NYLSTOP | SELBSTSICHERNDE MUTTER M10-5S | |
| 22 | B00180625 | VITE M6X1X 25 U5739 8.8ZN | SCREW | VIS | SCHRAUBE | |
| 23 | F01410037 | ROS.M6 6,4X12,5X1,6 U6592 ZN | WASHER | RONDELLE | BEILAGSCHEIBE 6 | |
| 24 | B00920106 | DADO M6X1 D985 8ZN | NUT | ECROU | SELBSTSICHERNDE MUTTER M6-5S | |
| 25 | B0H000207 | INNESTO RAPIDO 1 4 MASCHIO | FAST CLUTCH 1 4 MALE | EMBRAYAGE RAPIDE 1 4 MALE | KUPPLUNG 1 4 | |
| 26 | F01440094 | RONDELLA ALLUMINIO D10 | WASHER D10 ALUMINIUM | RONDELLE D10 AL | SCHIEBE D10 ALUMIN ARANDELA D10 AL | |
| 27 | B0H0P0001 | TUBO IDRAUL. L=5500 | HYDRAULIC HOSE L=5500 | TUYAU HYDRAULIQUE L=5500 | HYDRAULISCHES ROHR L=5500 | |
| 28 | B01441815 | ROS. 17 X23X1,5 RAME -3 8 | WASHER | RONDELLE | SCHEIBE | |
| 29 | B0H000143 | VALV. DI RID. VRPRL2B38TS.SR | REDUCTION VALVE | VALVE DE REDUCTION VRPRL2B38TS | VENTIL | |
| 30 | B0H6000AB | NIPPLO RIDUZ.1 2 -3 8 RASTEL | NIPPLE | NIPPLE REDUCTION 1 2 - 3 8 | | |
| 31 | B01442015 | ROS. 21 X27X1,5 RAME -1 2 | WASHER | RONDELLE | BEILAGSCHEIBE 1 2 | |
| 32 | B0H6000A0 | INNESTO RAP.NV 12GAS-M | QUICK CLUTCH | EMBRAYAGE | SCHNELLKUPPLUNG | |
| 33 | F05150055 | FASCETTA LUMEFIX 3,6X180 | CLAMP LUMEFIX | BANDE LUMEFIX | MANSCHETTE LUMEFIX | |
| 34 | B0E600022 | FASCETTA LUMEFIX 4,8X340 | CLAMP LUMEFIX 4,8X340 | | | |
| 35 | B005P0005 | PRIGIONIERO M20 108 | STUD BOLT | PRISONNIER | STIFTSCHRAUBE | |
| 36 | B0H000097 | TUBO R1T 1 4 L. 5500 | FLEXIBLE TUBE SAE 100 R1AT | TUYAU FLEXIBLE SAE 100 R1AT 1 | ROEHRE FLEX SAE 100 R1AT 1 4 | |
| 37 | B0H000223 | INNESTO RAP FEM VF0 12 GAS | INNESTO RAP FEM VF0 12 GAS . | EMBRAYAGE RAPIDE FEMELLE | | |

TAV_325

(*) 18 = SOLO NORVEGIA
ONLY NORWAY

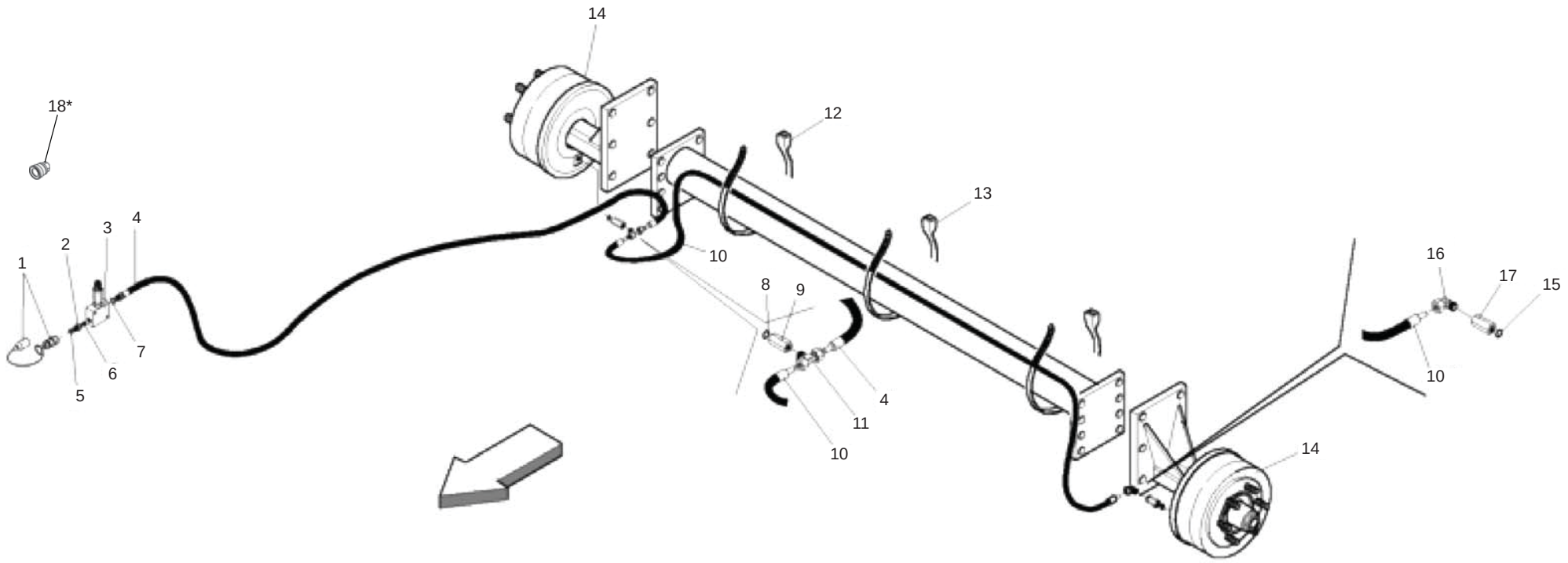

# FRENO IDRAULICO (NO OMOLOGAZIONE ITALIA)
## *HYDRAULIC BRAKE (NO ITALY APPROVAL)*

TAV_325

| Pos. | Cod. | Descrizione | Description | Description | Benennung | Descripcion |
|---|---|---|---|---|---|---|
| 1 | B0H6000A0 | INNESTO RAP.NV 12GAS-M | QUICK CLUTCH | EMBRAYAGE | SCHNELLKUPPLUNG | |
| 2 | B0H6000AB | NIPPLO RIDUZ.1 2 -3 8 RASTEL | NIPPLE | NIPPLE REDUCTION 1 2 - 3 8 | | |
| 3 | B0H000143 | VALV. DI RID. VRPRL2B38TS.SR | REDUCTION VALVE | VALVE DE REDUCTION VRPRL2B38TS | VENTIL | |
| 4 | B0H000097 | TUBO R1T 1 4 L. 5500 | FLEXIBLE TUBE SAE 100 R1AT | TUYAU FLEXIBLE SAE 100 R1AT 1 | ROEHRE FLEX SAE 100 R1AT 1 4 | |
| 5 | B01442015 | ROS. 21 X27X1,5 RAME -1 2 | WASHER | RONDELLE | BEILAGSCHEIBE 1 2 | |
| 6 | B01441815 | ROS. 17 X23X1,5 RAME -3 8 | WASHER | RONDELLE | SCHEIBE | |
| 7 | B01441815 | ROS. 17 X23X1,5 RAME -3 8 | WASHER | RONDELLE | SCHEIBE | |
| 8 | B01441415 | RONDELLA IN RAME 1 4 | WASHER | RONDELLE | BEILAGSCHEIBE 1 4 13X19X1,5 | |
| 9 | B0H000162 | MANICOTTO DI RACCORDO | FITTING SLEEVE | MANCHON DE RACCORD | ANSCHLUSS | |
| 10 | B0H000091 | TUBO FLEX SAE 100 R1AT1 4L2050 | FLEXIBLE TUBE SAE 100 R1AT | TUYAU FLEXIBLE SAE 100 R1AT 1 | ROEHRE FLEX SAE 100 R1AT 1 4 | |
| 11 | B0H000098 | RACCORDO T 10 TN 127-10LR | UNION T 10 | RACCORD T 10 | T.VERSCHRAUBUNG | |
| 12 | F05150055 | FASCETTA LUMEFIX 3,6X180 | CLAMP LUMEFIX | BANDE LUMEFIX | MANSCHETTE LUMEFIX | |
| 13 | B0E600022 | FASCETTA LUMEFIX 4,8X340 | CLAMP LUMEFIX 4,8X340 | | | |
| 14 | B07100031 | MOZZO CON FRENO SPRINTER NEW | HUB WITH BRAKE | MOYEU AVEC FREIN NOUVELLE SPR | RADACHSE MIT BREMSE SPRINTER | |
| 15 | B01441415 | RONDELLA IN RAME 1 4 | WASHER | RONDELLE | BEILAGSCHEIBE 1 4 13X19X1,5 | |
| 16 | B0H000086 | RACCORDO L 10 TN94-10LR | UNION L 10 | RACCORD L 10 | ANSCHLUSSSTUECK L 10 | |
| 17 | B0H000162 | MANICOTTO DI RACCORDO | FITTING SLEEVE | MANCHON DE RACCORD | ANSCHLUSS | |
| 18 | B0H000223 | INNESTO RAP FEM VF0 12 GAS | INNESTO RAP FEM VF0 12 GAS . | EMBRAYAGE RAPIDE FEMELLE | | |

TAV_360

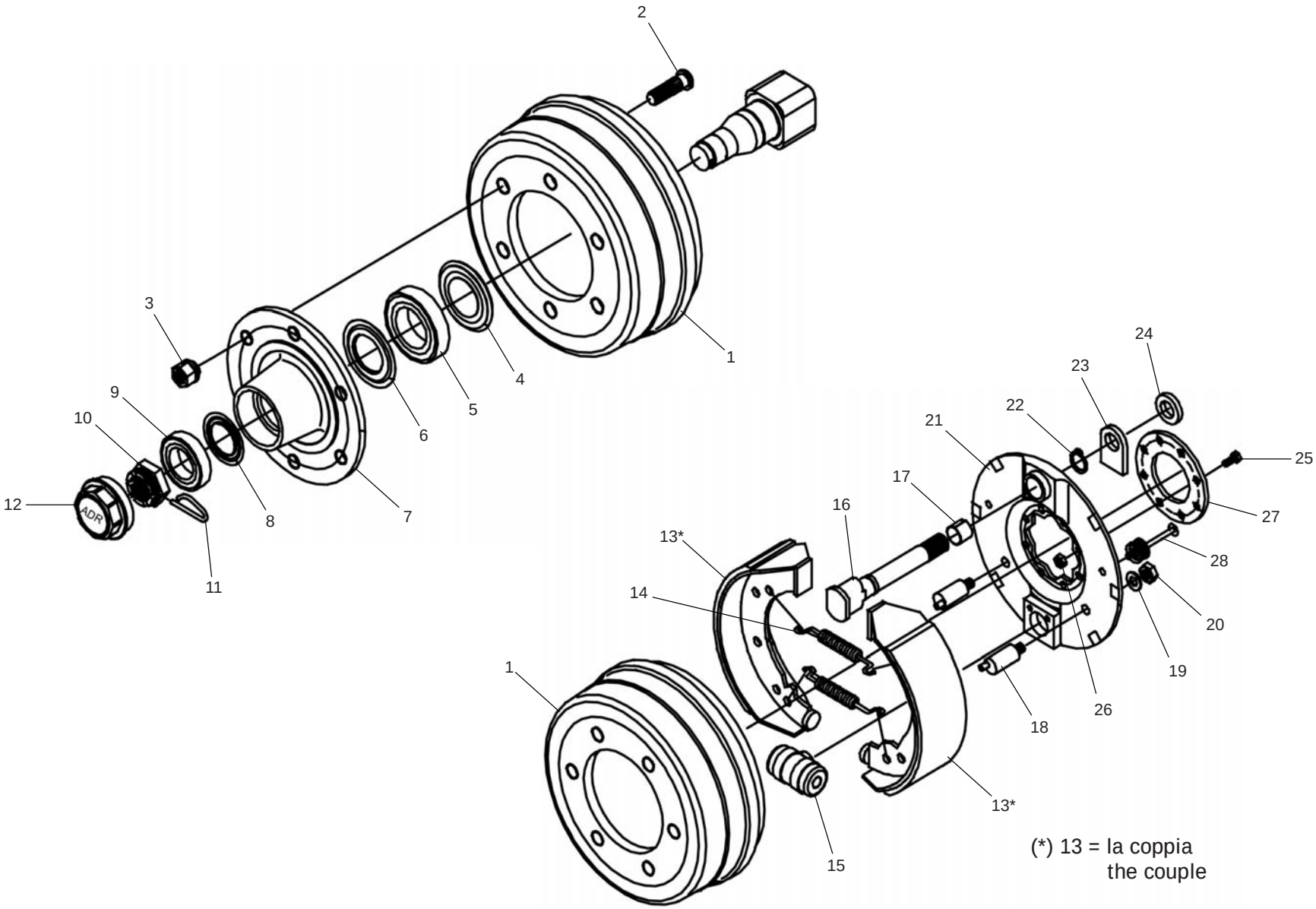
2
3
1
4
5
6
9
10
12
ADR
8
7
11
24
23
22
21
25
17
27
16
13*
28
14
20
1
19
26
18
13*
15
(*) 13 = la coppia
the couple

# ESPLOSO MOZZO CON FRENO
## *HUB WITH BRAKE PARTS*

TAV_360

| Pos. | Cod. | Descrizione | Description | Description | Benennung | Descripcion |
|---|---|---|---|---|---|---|
| 1 | B0R001136 | TAMBURO | DRUM | | | |
| 2 | B0R001137 | COLONNETTA | WHEELSTUD | | | |
| 3 | B0R001138 | DADO COLONNETTA | WHEEL NUT | | | |
| 4 | B0R001139 | ANELLO DI TENUTA | RETAINING RING | | | |
| 5 | B0R001140 | CUSCINETTO | BEARING | | | |
| 6 | B0R001141 | ANELLO PARAGRASSO | GREASE RING | | | |
| 7 | B0R001142 | MOZZO | HUB | | | |
| 8 | B0R001143 | ANELLO PARAGRASSO | GREASE RING | | | |
| 9 | B0R001144 | CUSCINETTO | BEARING | | | |
| 10 | B0R001145 | DADO INTAGLI | CROWN NUT | | | |
| 11 | B0R001146 | SPINA ELASTICA | SPRING PIN | | | |
| 12 | B0R001147 | CALOTTA | CAP | | | |
| 13 | B0R001148 | MASSA FRENO COMPLETA | BRAKESHOES ASSEMBLED | | | |
| 14 | B0R001149 | MOLLA | SPRING | | | |
| 15 | B0R001150 | CILINDRO | CYLINDER | | | |
| 16 | B0R001151 | ALBERO CAMMA | CAM SHAFT | | | |
| 17 | B0R001152 | BOCCOLA | BUSHING | | | |
| 18 | B0R001153 | PERNO | PIN | | | |
| 19 | B0R001154 | RONDELLA | WASHER | | | |
| 20 | B0R001155 | DADO | NUT | | | |
| 21 | B0R001156 | PIASTRA DI PROTEZIONE | PROTECTION PLATE | | | |
| 22 | B0R001157 | ANELLO SEEGER | SEEGER RING | | | |
| 23 | B0R001158 | SUPPORTO | SUPPORT | | | |
| 24 | B0R001159 | RALLA | FIFTH WHEEL | | | |
| 25 | B0R001160 | VITE | SCREW | | | |
| 26 | B0R001161 | DADO | NUT | | | |
| 27 | B0R001162 | FLANGIA | FLANGE | | | |
| 28 | B0R001163 | PERNO MOLLA | SPRING PIN | | | |

TAV_330

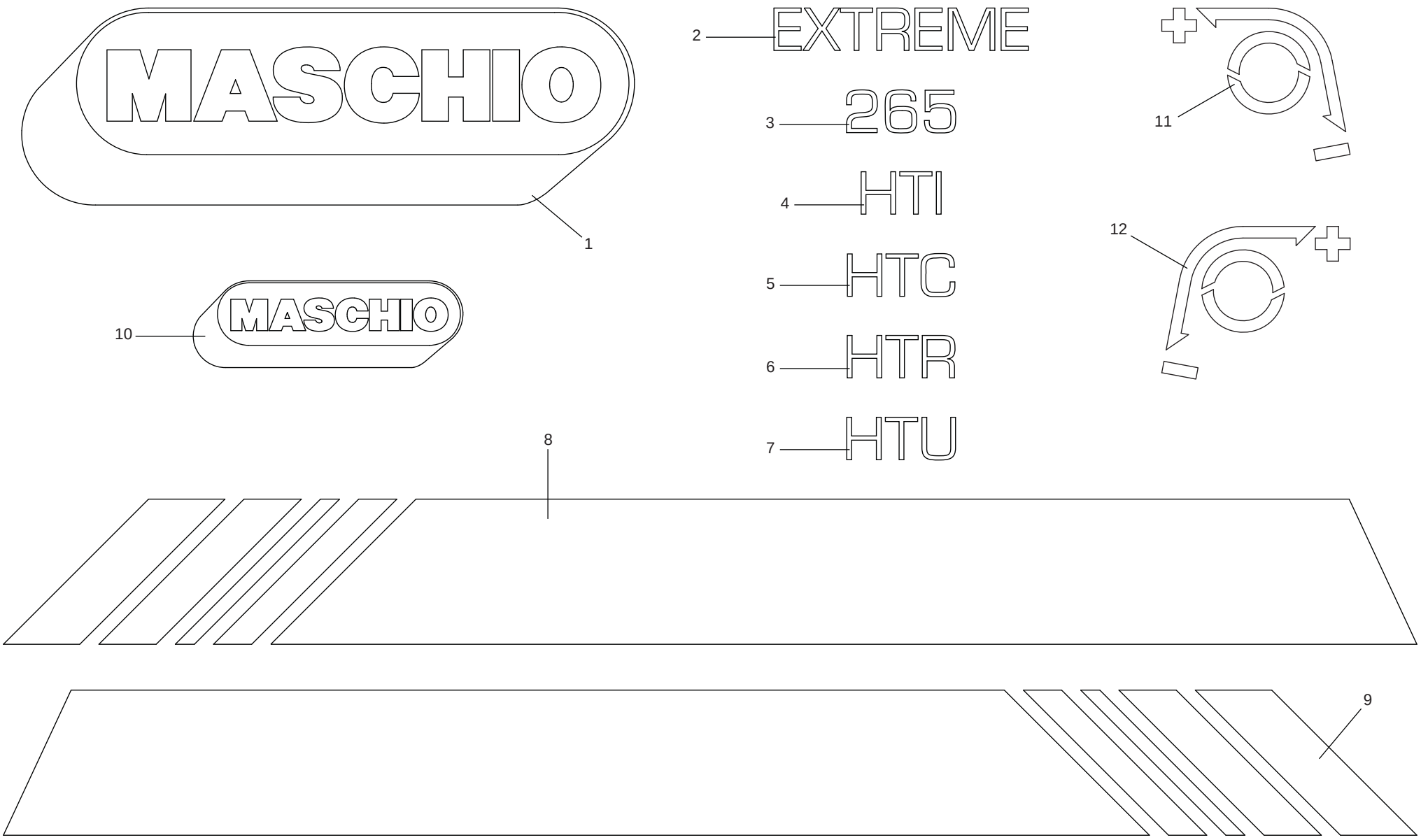
MASCHIO
1
2
EXTREME
3
265
4
HTI
5
HTC
6
HTR
7
HTU
8
9
10
MASCHIO
11
12

# DECAL "LOGO"
## *DECAL "LOGO"*

TAV_330

| Pos. | Cod. | Descrizione | Description | Description | Benennung | Descripcion |
|---|---|---|---|---|---|---|
| 1 | F20010506 | ETICH.ID.MASCHIO802X267 BIANCO | ID LABEL MASCHIO 802X267 WHITE | DECAL MASCHIO 802X267 BLANC | AUFKLEBER MASCHIO 802X267 WEI | |
| 2 | F20020560 | ETICHETTA EXTREME | DECAL EXTREME | DECAL EXTREME | AUFKLEBER EXTREME | |
| 3 | F20020592 | ETICHETTA 265 | DECAL. 265 | | | |
| 4 | F20020595 | DECAL. HTI | DECAL. HTI | | | |
| 5 | F20020596 | ETICHETTA HTC | DECAL. HTC | DECAL. HTC | AUFKLEBER HTC | |
| 6 | F20020598 | ETICHETTA HTR | DECAL. HTR | DECAL. HTR | AUFKLEBER HTR | |
| 7 | F20020597 | ETICHETTA HTU | DECAL. HTU | DECAL. HTU | AUFKLEBER HTU | |
| 8 | F20020579 | DECAL. FASCIA DX 265 | DECAL RIGHT STRIP 265 | | | |
| 9 | F20020580 | DECAL. FASCIA SX 265 | DECAL LEFT STRIP 265 | | | |
| 10 | F20010503 | ETICH.ID.MASCHIO353X118 BIANCO | ID LABEL MASCHIO 353X118 WHITE | | | |
| 11 | B07500746 | ET CARTER PU - LATO DX | DECAL CARTER PU - | DECAL CARTER PU - DROIT | AUFKLEBER CARTER PU - RECHTS | |
| 12 | B07500747 | ET CARTER PU - LATO SX | DECAL CARTER PU - | DECAL CARTER PU - GAUCHE | AUFKLEBER CARTER PU - LINKS | |

TAV_345

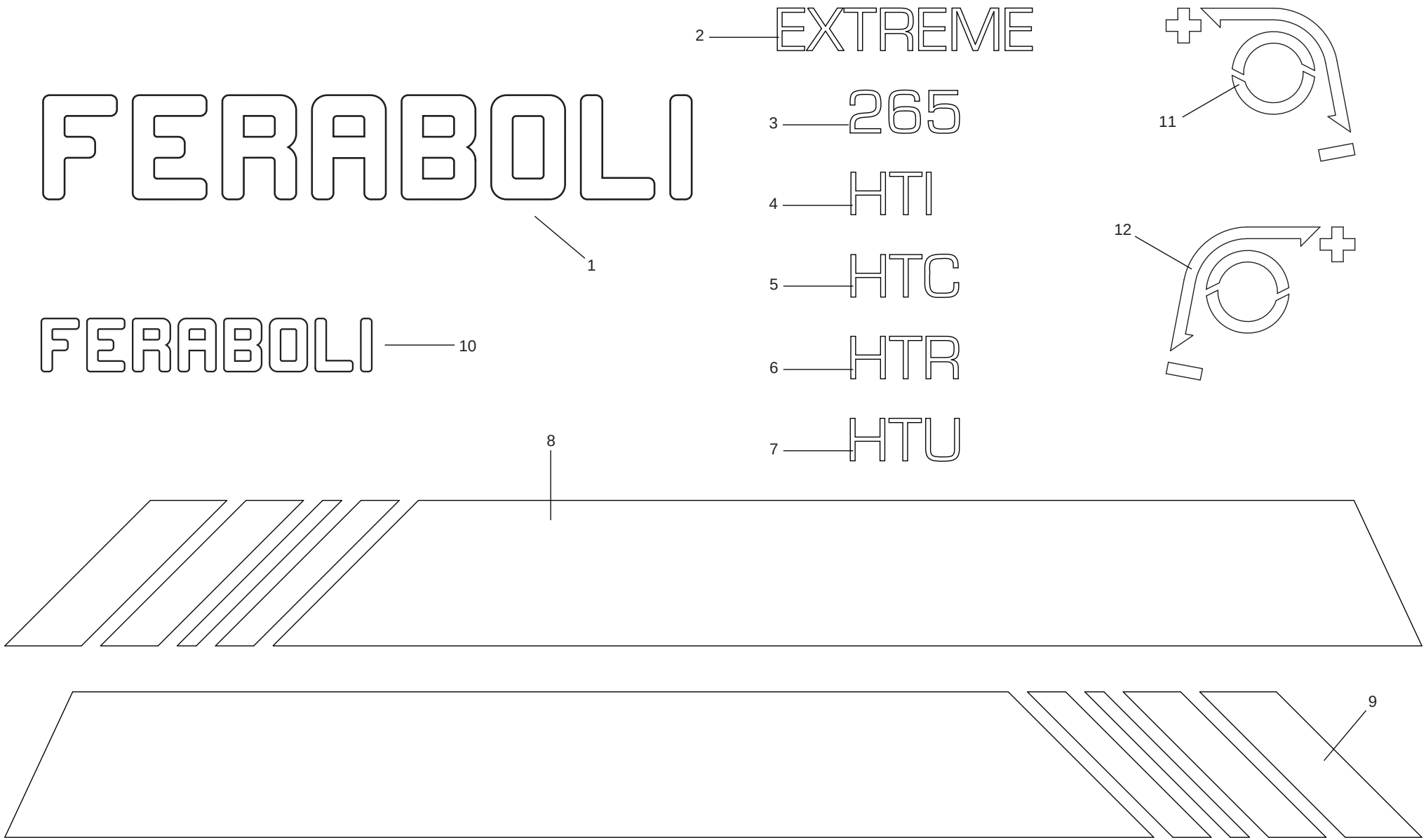
FERABOLI
1
FERABOLI
10
2
EXTREME
3
265
4
HTI
5
HTC
6
HTR
7
HTU
8
9
11
12

# DECAL "LOGO" GIAPPONE
## *DECAL "LOGO" JAPAN*

TAV_345

| Pos. | Cod. | Descrizione | Description | Description | Benennung | Descripcion |
|---|---|---|---|---|---|---|
| 1 | B075C0055 | ETICHETTA FERABOLI 1000X160 | DECAL FERABOLI L=1000 X 160 | | | |
| 2 | F20020560 | ETICHETTA EXTREME | DECAL EXTREME | DECAL EXTREME | AUFKLEBER EXTREME | |
| 3 | F20020592 | ETICHETTA 265 | DECAL. 265 | | | |
| 4 | F20020595 | DECAL. HTI | DECAL. HTI | | | |
| 5 | F20020596 | ETICHETTA HTC | DECAL. HTC | DECAL. HTC | AUFKLEBER HTC | |
| 6 | F20020598 | ETICHETTA HTR | DECAL. HTR | DECAL. HTR | AUFKLEBER HTR | |
| 7 | F20020597 | ETICHETTA HTU | DECAL. HTU | DECAL. HTU | AUFKLEBER HTU | |
| 8 | F20020579 | DECAL. FASCIA DX 265 | DECAL RIGHT STRIP 265 | | | |
| 9 | F20020580 | DECAL. FASCIA SX 265 | DECAL LEFT STRIP 265 | | | |
| 10 | B075C0054 | DECAL FERABOLI L=298 X 48 | DECAL. FERABOLI L=298 X 48 | | | |
| 11 | B07500746 | ET CARTER PU - LATO DX | DECAL CARTER PU - | DECAL CARTER PU - DROIT | AUFKLEBER CARTER PU - RECHTS | |
| 12 | B07500747 | ET CARTER PU - LATO SX | DECAL CARTER PU - | DECAL CARTER PU - GAUCHE | AUFKLEBER CARTER PU - LINKS | |

TAV_335

1

2

3

4

5

6

7

8

9

10

11

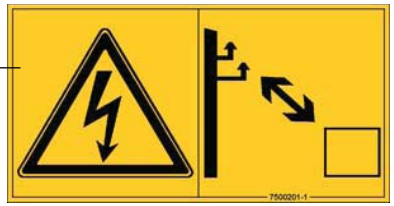


12

15

16

14

13

# DECAL "CE"
## *DECAL "CE"*

TAV_335

| Pos. | Cod. | Descrizione | Description | Description | Benennung | Descripcion |
|---|---|---|---|---|---|---|
| 1 | B07500185 | ET CONSULT IL LIBRETTO OP. | DECAL SEE OPERATOR S MANUAL | DECAL LIRE LE LIVRE OPERATEU | AUFKLEBE BUCH ANSCHLAGEN | |
| 2 | B07500186 | ET TOGLIERE LA CHIAVE... | DECAL TAKE THE WRENCH AWAY | DECAL CHASSER LA CLEF | AUFKLEBE SCHLUSSEL ZIEHEN | |
| 3 | B07500208 | ET MANO-OLIO SOTTO PRESSIONE | DECAL OIL UNDER PRESSURE HAND | DECAL MAIN-HUILE SOUS PRESSIO | AUFKLEBE HAND-OEL | |
| 4 | B07500187 | ET 540 GIRI - RICC SX NORMA | DECAL 540RPM - LEFT BURR | DECAL 540 T H-SENS DE ROTATIO | AUFKLEBE 540 RPM | |
| 5 | B07500199 | ET PERSONA SCHIACC.-ZONA | DECAL SQUEEZED PERSON | DEECAL PERSONNE ECRASEE -ZONE | AUFKLEBE GEQUETSCHER MANN | |
| 6 | B07500203 | ET TAGLIO MANO-STOP NORMA CEE | DECAL HAND CUT _ STOP | DECAL COUPE MAINE - STOP | AUFKLEBE HANDSCHNITT - HALT | |
| 7 | B07500221 | ET PIEDE TAGLI-STARE DISTANTE | WARNING CUT FEET DECAL | DECAL PIED COUPE | AUFKLEBE GESCHNITTER FUSS | |
| 8 | B07500207 | ET PERSONA INTRAPP. PICK-UP | TRAPPED MAN DECAL | DECAL PERSONNE PIEGEE-PICK-UP | AUFKLEBE GEFANGTENER MANN | |
| 9 | B07500198 | ET PERSONA SCHIAC-SOTTO PORTE | SQUEEZED MAN DECAL | DECAL PERSONNE ECRASE -SOUS | AUFKLEBE GEQUETSCHER MANN | |
| 10 | B07500726 | DECAL TAGLIO MANO-LAMA SPAGO | LABEL CUTTING BLADE HAND-TWINE | | | |
| 11 | B07500201 | ET SCOSSA ELETTR NORMA CEE | ELECTRIC SHOCK DECAL | DECAL SECOUSSE ELECTRIQUE | AUFKLEBER STROMSTOSS | |
| 12 | B07500212 | ET PERSONA SCHIACC-BALLA NORM | SQUEEZED MAN-BALE DECAL | DECAL PERSONNE ECRASEE -BALLE | AUFKLEBER GEQUERSCHTER MANN | |
| 13 | B07500197 | ET PERSONA SCHIACC-PRES MURO | SQUEEZED MAN DECAL | DECAL PERSONNE RCRASE - PRES | AUFKLEBER GEQUETSCHER MANN | |
| 14 | B07500781 | ET PERICOLO CARDANO | DANGER PTO SHAFT DECAL | DECAL DANGER CARDAN | ABZIEHBILD GEFAHR GELENKWELLE | |
| 15 | B07500724 | ET PERS SCHIACC.-BLOCC.PORTE | DECAL | DECAL PERSONNE-ECRASEE - BLOC | AUFKLEBER GEDRUCKTE PERSON | |
| 16 | B07500210 | ET MANO SCHIACC-ORGANI SCH | DECAL SQUEEZED HAND _ ORGANS | DECAL MAIN ECRASEE | AUFKLEBE GEQUERSCHTE HAND | |

# TAV_340

1

2

3

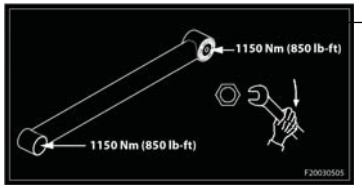

4

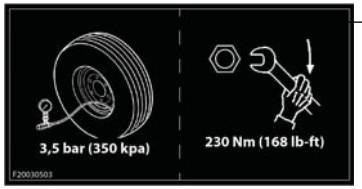

5

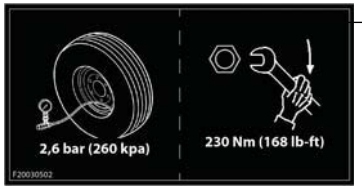

13

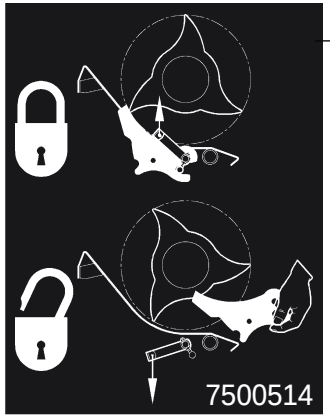

6*

14*

15*

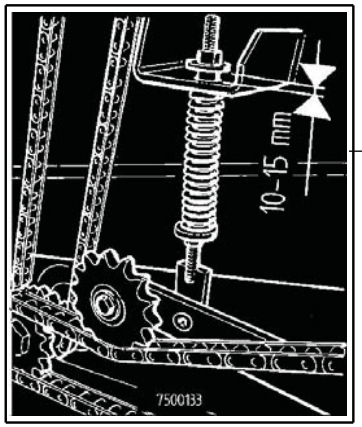

8

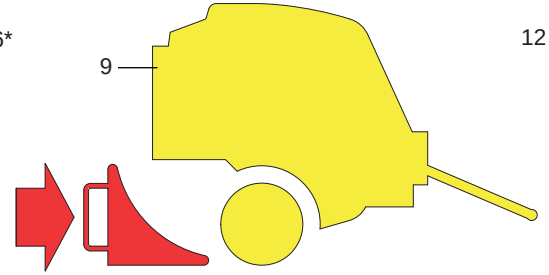
9

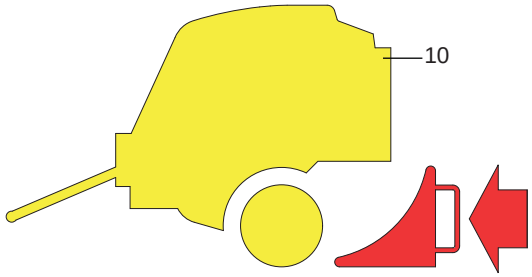
10

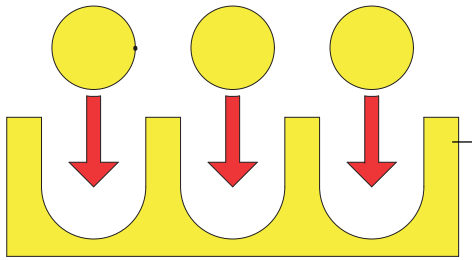
7

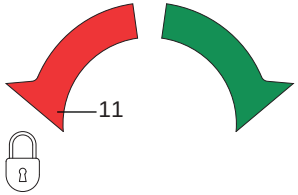
11

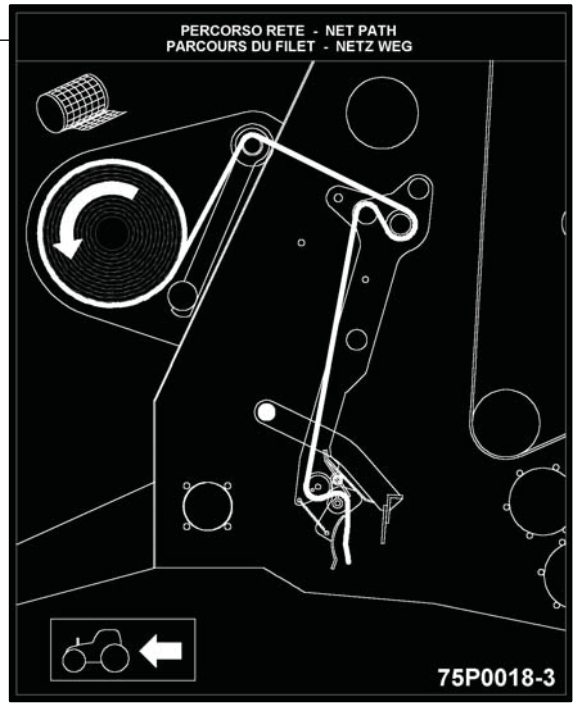

12

(*) 6; 14; 15 = SOLO CUT
ONLY CUT



MASCHIO

# DECAL "INSTRUZIONE"
## *DECAL "INSTRUCTION"*

TAV_340

| Pos. | Cod. | Descrizione | Description | Description | Benennung | Descripcion |
|---|---|---|---|---|---|---|
| 1 | B07500217 | ET NON USARE GETTI.. | DECAL DO NOT USE SPOUTS | DECAL NE PAS USER JETS | AUFKLEBE KEINE STRAHL BENUTZE | |
| 2 | B07500214 | ET POMPETTA GRASSO | DECAL GREASE SQUIRT | DECAL PETITE POMPE GRAISSE | AUFKLEBE OELKAENNCHEN | |
| 3 | B07500216 | ET GANCIO | DECAL HOOK | DECAL CROC | AUFKLEBE HACKEN | |
| 4 | F20030505 | DECAL COPPIA SERRAG.TIM.EXT 2 | TIGHTENING TORQUE LABEL EXT 2 | | | |
| 5 | F20030503 | DECAL PNEUMATICI 3,5 BAR 230NM | DECAL TIRE 3,5 BAR 230NM | | | |
| 6 | B07500514 | ET COLT. BLOCC. SBLOCC. | DECAL KNIVES LOCK. UNBLOCK. | DECAL COUTEAUX BLOC. DEBLOC. | DECAL MESSERN | |
| 7 | B07500749 | ET AGGANCI IDRAULICI | HYDRAULIC LINKAGE DECAL | DECAL ATTELAGE HYDRAULIQUE | AUFKLEBER HYDR. KUPPLUNG | |
| 8 | B07500133 | ET TENDITORE AUTOMATICO | DECAL AUTOMATIC TIGHTNER | AUTOCOLLANT TENDEUR AUTOMATI | AUFKLEBER AUTOMATISCHER SPANN | |
| 9 | B07500733 | ET BLOCCO RUOTA DX | DECAL BLOCK WHEEL | DECAL BLOC ROUE DROIT | AUFKLEBER BLOCKIERUNG RAD RECH | |
| 10 | B07500750 | ET BLOCCO RUOTA SX | DECAL BLOCK WHEEL | DECAL BLOC ROUE GAUCHE | AUFKLEBER BLOCKERUNG RAD LINKS | |
| 11 | B07500748 | ET MANOPOLA APERTO CHIUSO | DECAL KNOB OPEN CLOSE | DECAL BOUTON OUVERT FERME | AUFKLEBER HANDGRIFF OEFF. SCHL | |
| 12 | B075P0018 | ET LEG.RETE CON 2 RULLI | DECAL NET WITH 2 ROLLER | DECAL LIAGE FILET AVEC 2 ROUL | AUFKL. NETZBIND. MIT 2 WALZEN | |
| 13 | F20030502 | DECAL PNEUMATICI 2,6BAR 230NM | TIRES LABEL 2,6BAR 230NM | | | |
| 14 | B07500513 | ET ROT. FOLLE | DECAL IDLE ROTOR | DECAL ROTOR FOU | DECAL LEER ROTOR | |
| 15 | B07500512 | ET MARCIA ROT. | DECAL ROTOR GEARSHIFT | DECAL ALLURE ROTOR | DECAL ROTOR GANGGETRIEBE | |

# USATE SEMPRE RICAMBI ORIGINALI
# *ALWAYS USE ORIGINAL SPARE PARTS*
# IMMER DIE ORIGINAL-ERSATZTEILE VERWENDEN
# *EMPLOYEZ TOUJOURS LES PIECES DE RECHANGE ORI*GINALES
# UTILIZAR SIEMPRE REPUESTOS ORIGINALES

MASCHIO

***Servizio Assistenza Tecnica - After Sales Service***
***Servizio Ricambi - Spare Parts Service***

maschio.com

DEALER:

F 0 7 0 2 2 2 2 3


MASCHIO

**MASCHIO Fienagione S.p.A.**
Sede legale Cremona
Via Bredina, 6 - 26100 Cremona (Italy)
Tel. +39 0372 564610
Fax +39 0372 564625
info@maschio.com

**ООО МАСКИО-ГАСПАРДО РУССИЯ**
404130, ВОЛЖСКИЙ,
ВОЛГОГРАДСКАЯ обл.,
УЛ. ПУШКИНА, 117 Б., РОССИЯ
TEL. +7 8443 203100
FAX +7 8443 203101
info@maschio.ru

**MASCHIO GASPARDO Poland sp z.o.o.**
Ul. Wapienna 6/8 - 87 – 100 Torun Poland
Tel. +48 56 6506051
Fax +48 56 6506053
www.gaspardo.pl

**MASCHIO FRANCE Sarl**
1, Rue de Mérignan ZA
F - 45240 La Ferte St. Aubin
France
Tel. +33 (0) 2.38.64.12.12
Fax +33 (0) 2.38.64.66.79
info@maschio.fr

**MASCHIO-GASPARDO ROMANIA S.R.L.**
Strada Înfrátirii, F.N.
315100 Chisineu-Cris (Arad) - România
Tel. +40 257 307030
Fax +40 257 307040
info@maschio.ro

**MASCHIO GASPARDO NORTH AMERICA, Inc.**
112 3rd Avenue East
Dewitt IA 52742 - USA
Tel. +1 563 6596400
Fax +1 563 6596405
info@maschio.us

**MASCHIO IBERICA S.L.**
**MASCHIO DEUTSCHLAND GMBH**
**MASCHIO-GASPARDO UCRAINA**
**GASPARDO-MASCHIO TURCHIA**
**MASCHIO-GASPARDO CINA**
**MASCHIO-GASPARDO INDIA**



Research & Development MASCHIO Fienagione S.p.A.