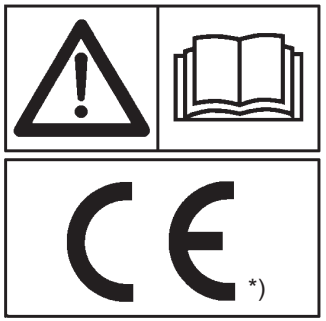

MASCHIO Fienagione S.p.A.

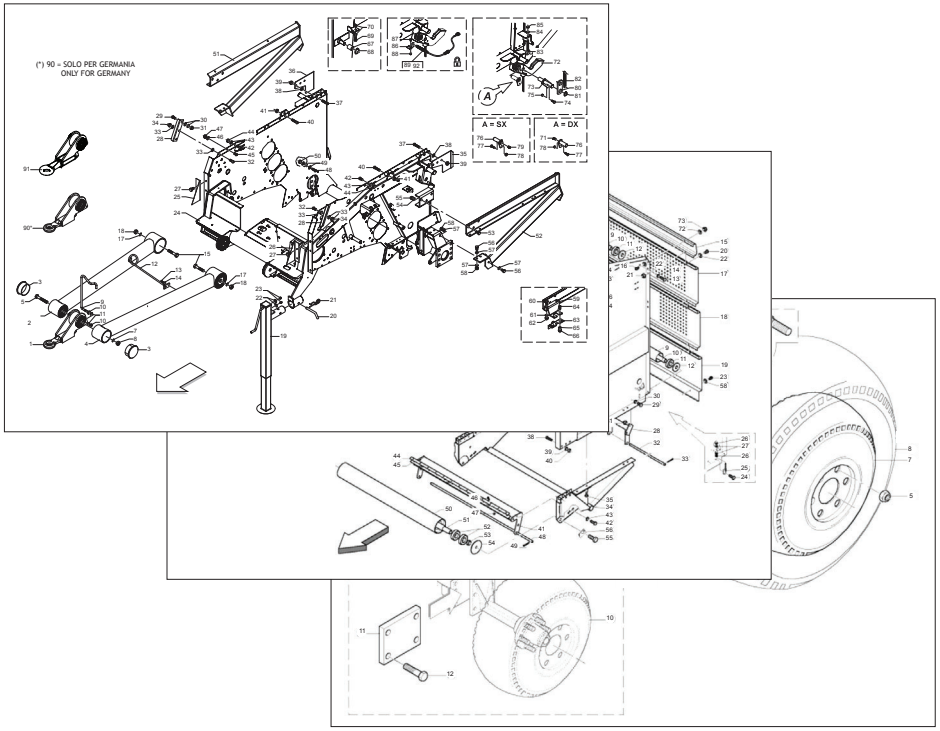

EXTREME 265

Cod: F07022338 2018-04

*) Valido per Paesi UE
*) Valid for EU member countries
*) Valable dans les Pays UE
*) Gilt für EU-Mitgliedsländer
*) Válido para Países UE

IT PARTI DI RICAMBIO
EN *SPARE PARTS*
DE ERSATZTEILE
FR *PIECES DÉTACHÉES*
ES PIEZAS DE REPUESTO

ITALIANO | ENGLISH | DEUTSCH | FRANÇAIS | ESPAÑOL

PARTI DI RICAMBIO

Le ordinazioni delle parti di ricambio vanno fatte presso i nostri concessionari di zona e devono essere sempre corredate dalle seguenti indicazioni:

- **Tipo, modello e numero di matricola dell'attrezzatura.** Tali dati sono stampigliati nell'apposita targhetta di cui è dotata ogni attrezzatura.

- **Numero di codice della parte richiesta** rilevabile dal catalogo ricambi.

- **Descrizione del particolare e quantità richiesta.**

- **Numero della tavola.**

- **Mezzo di trasporto.** Nel caso questa voce non sia specificata, la Ditta Costruttrice, pur dedicando a questo servizio una particolare cura, non risponde di eventuali ritardi di spedizione dovuti a cause di forza maggiore.
Le spese di trasporto si intendono sempre a carico del destinatario. La merce viaggia a rischio e pericolo del committente anche se venduta franco destino.

NOTA: Il termine (**Dx**) **Destro** o (**Sx**) **Sinistro** della macchina o di parti di essa, è inteso guardando la macchina dalla parte posteriore. Le eccezioni saranno indicate.

SPARE PARTS

Orders must be transmitted through our area dealers and should always include the following indications:

- ***Type, model and serial number of the machine.*** *These data are punched on the data plate with which every implement is equipped.*

- ***Code number of the required spare part.*** *This will be found in the spare parts catalogue.*

- ***Description of the part and required quantity.***

- ***Table number.***

- ***Means of dispatch.*** *If this item is not indicated, the Manufacturer, while dedicating particular care to this service, shall not be held responsible for delays in delivery caused by cases of force majeure.*
Transport expenses shall always be at the consignee's charge. The goods travel at the purchaser's risk and peril even when sold ex destination.

NOTE: *The symbols (**Dx**) **right** and (**Sx**) **left**, concerning the machine or single parts of it, are referred, as in the figure, to a rear view of them. Exceptions will be indicated.*

ERSATZTEILE

Die Bestellungen müssen bei unseren Gebietshändrer aufgegeben werden. Bei der Bestellung sind stets die folgenden Angaben zu machen:

- **Typ, Modell und Serien-Nummer des Geräts**. Diese Daten stehen auf dem Typenschild, mit dem jedes Gerät versehen ist.

- **Artikel Nr. der erforderlichen Ersatzteile.** Diese stehen im Ersatzteil-Katalog.

- **Beschreibung des Ersatzteils und die erforderliche Stückzahl.**

- **Tafelnummer.**

- **Versandmittel.** Wenn dieser Punkt nicht spezifiziert wird, haftet die Herstellerfirma nicht für etwaigen Lieferverzug aufgrund höherer Gewalt, auch wenn er diesen Service besonders aufmerksam abwickelt.
Die Frachtkosten gehen dagegen immer zu Lasten des Empfängers. Die Ware reist auf Gefahr und Risiko des Auftraggebers, auch wenn frei Haus Verkauft vereinbart worden ist.

N.B.: Die Merkzeichen (**Dx**) **rechts** und (**Sx**) **links** betreffen eine rückwärtige Aussicht der Maschine oder Teile von ihr (siehe Bild). Ausnahmen werden gezeigt.

PIECES DÈTACHÈES

Les ordres doivent être effectués auprés de nos concessionaires de zone en précisant les indications suivantes:

- ***Type, modéle et numéro de série de la machine****. Ces données sont gravées sur la plaque d'identification de chaque outil.*

- ***Numéro de code de la piéce détachée*** *indiqué sur le catalogue des piéces détachées.*

- ***Description de la piéce et quantité requise****.*

- ***Numéro de plan****.*

- ***Moyen d'expédition****. Si cette rubrique n'est pas indiquée, le Constructeur, bien que soucieux de ce service, ne répond pas des retards d'expédition pour des causes de force majeure.*
Les frais de transport sont toujours à la charge du destinataire. La marchandise voyage aux risques et périls de l'acheteur même si vendue franco de port.

N.B.: *Les références (**Dx**) **droit** et (**Sx**) **gauche** de la machine ou des parties de la même, est entendue, comme de la figure, en regardant la machine de derriere dans le sens de marche.*

RESPUESTOS

Los pedidos han de efectuarse en nuestros consesionarios de zona y deben incluir siempre las siguientes indicaciones:

- **Tipo, modelo y número de matrícula del equipo**. Dichos datos están impresos en la relativa placa presente en el equipo.

- **Número de código de la parte requerida** presente en el catálogo respuestos.

- **Descripcíon de la pieza y cantidad requerida**.

- **Numero de illustración**.

- **Medio de transporte**. En caso que este ítem no esté especificado, el Fabricante, aún prestando la debidas consideraciones para este aspecto, no responde por eventuales retardos de env'o debidos a causas de fuerza mayor.
Los gastos de transporte se consideran siempre a cargo del destinatario. La mercandería viaja bajo riesgo y peligro del comprador, incluso cuando se vende franco destino.

N.B.: La refencia (**Dx**) **derecha** o (**Sx**) **izquierda** de la máquina o de sus componentes, se entiende, como en la figura, mirando la máquina por la parte trasera. Se indicarán las excepciones.

N° Tavola	INDICE	Pagina
TAV_010	TELAIO INFERIORE + TIMONE + ROLLBAR + GANCI	7
TAV_015	TELAIO SUPERIORE	11
TAV_020	PORTELLONE	13
TAV_510	BLOCCO CINGHIE	17
TAV_025	SEGNALATORI DI CARICAMENTO	19
TAV_030	RUOTE	21
TAV_035	SCATOLA DI TRASMISSIONE	23
TAV_040	SCATOLA DI TRASMISSIONE PTO	25
TAV_045	ESPLOSO SCATOLA DI TRASMISSIONE	27
TAV_350	SCATOLA DI TRASMISSIONE 1000 G/1'	29
TAV_050	RULLI	31
TAV_055	RULLI CUT	35
TAV_060	RULLI "H20"	39
TAV_065	RULLI CUT "H20"	43
TAV_070	TRASMISSIONE	47
TAV_075	BILANCIERE	51
TAV_080	INFALDATORE	53
TAV_085	ROTOR: TELAIO + ROTORE	55
TAV_090	CUT 13: TELAIO + ROTORE	57
TAV_095	CUT 25: TELAIO + ROTORE	61
TAV_100	CUT 13: TRAVERSA COLTELLI	65
TAV_105	CUT 25: TRAVERSA COLTELLI	67
TAV_110	SICUREZZA TRASMISSIONE: MECCANICA CON BULLONE	69
TAV_115	SICUREZZA TRASMISSIONE: AUTOMATICA "AFC"	71
TAV_120	PICK-UP M	73
TAV_125	PICK-UP L	75
TAV_130	RULLO CONVOGLIATORE (PICK-UP L - PARTE 1)	77
TAV_135	RULLO CONVOGLIATORE (PICK-UP L - PARTE 2)	79
TAV_140	PICK-UP M CUT	81
TAV_145	PICK-UP L CUT	83
TAV_150	RULLO CONVOGLIATORE CUT (PICK-UP M)	85
TAV_155	RULLO CONVOGLIATORE CUT (PICK-UP L)	87
TAV_160	ASPO PICK-UP M	89
TAV_165	ASPO PICK-UP L	91
TAV_170	TRASMISSIONE PICK-UP M	93
TAV_175	TRASMISSIONE PICK-UP L	97
TAV_180	TRASMISSIONE PICK-UP M CUT	101
TAV_185	TRASMISSIONE PICK-UP L CUT	105
TAV_190	IMPIANTO IDRAULICO PICK-UP	109

N° Table	*INDEX*	*Page*
TAV_010	*LOWER FRAME + CROSSBAR + ROLLBAR + HOOKS*	*7*
TAV_015	*UPPER FRAME*	*11*
TAV_020	*REAR GATE*	*13*
TAV_510	*BELTS LOCK*	*17*
TAV_025	*LOADER INDICATORS*	*19*
TAV_030	*WHEELS*	*21*
TAV_035	*GEAR BOX*	*23*
TAV_040	*PTO GEAR BOX*	*25*
TAV_045	*GEAR BOX PARTS*	*27*
TAV_350	*GEAR BOX 1000 RPM*	*29*
TAV_050	*ROLLERS*	*31*
TAV_055	*ROLLERS CUT*	*35*
TAV_060	*ROLLERS "H20"*	*39*
TAV_065	*ROLLERS CUT "H20"*	*43*
TAV_070	*TRANSMISSION*	*47*
TAV_075	*BELT TENSIONER ARM*	*51*
TAV_080	*FEEDING SYSTEM*	*53*
TAV_085	*ROTOR: FRAME + ROTOR*	*55*
TAV_090	*CU 13: FRAME + ROTOR*	*57*
TAV_095	*CUT 25: FRAME + ROTOR*	*61*
TAV_100	*CUT 13: KNIVES CROSSBAR*	*65*
TAV_105	*CUT 25: KNIVES CROSSBAR*	*67*
TAV_110	*TRASMISSION SAFETY DEVICE: MECHANICAL WITH BOLT*	*69*
TAV_115	*TRANSMISSIONE SAFETY DEVICE: AUTOMATIC "AFC"*	*71*
TAV_120	*PICK-UP M*	*73*
TAV_125	*PICK-UP L*	*75*
TAV_130	*ROLLER CONVEYOR (PICK-UP L - PART 1)*	*77*
TAV_135	*ROLLER CONVEYOR (PICK-UP L - PART 2)*	*79*
TAV_140	*PICK-UP M CUT*	*81*
TAV_145	*PICK-UP L CUT*	*83*
TAV_150	*ROLLER CONVEYOR CUT (PICK-UP M)*	*85*
TAV_155	*ROLLER CONVEYOR CUT (PICK-UP L)*	*87*
TAV_160	*PICK-UP M SHAFT*	*89*
TAV_165	*PICK-UP L SHAFT*	*91*
TAV_170	*PICK-UP M TRANSMISSION*	*93*
TAV_175	*PICK-UP L TRANSMISSION*	*97*
TAV_180	*PICK-UP M CUT TRANSMISSION*	*101*
TAV_185	*PICK-UP L CUT TRANSMISSION*	*105*
TAV_190	*PICK-UP HYDRAULIC SYSTEM*	*109*

N° Tavola	INDICE	Pagina
TAV_195	IMPIANTO IDRAULICO PICK-UP CUT	111
TAV_200	RUOTE PICK-UP M	113
TAV_205	RUOTE PICK-UP L	115
TAV_210	IMPIANTO IDRAULICO MACCHINA	117
TAV_215	VALVOLA GEOMETRIA-PRESSIONE (ELETTRONICA E MECCANICA)	119
TAV_220	CABLAGGIO	121
TAV_225	LEGATORE FILO	123
TAV_230	LEGATOER FILO: CASSONETTO	127
TAV_235	CARTER ANTERIORE (SOLO CON LEGATORE FILO)	129
TAV_240	LEGATORE RETE (PARTE 1)	131
TAV_245	LEGATORE RETE (PARTE 2)	133
TAV_250	LEGATORE RETE (PARTE 3)	135
TAV_255	LEGATORE RETE (PARTE 4)	137
TAV_260	LEGATORE RETE (PARTE 5)	139
TAV_265	IMPIANTO OLIATURA AUTOMATICA	143
TAV_270	IMPIANTO OLIATURA AUTOMATICA CUT	145
TAV_275	CARTER ANTERIORI	149
TAV_280	CARTER LATERALI	151
TAV_285	IMPIANTO LUCI + CUNEI	155
TAV_290	ESPULSORE	157
TAV_295	GRAFFATURA	159
TAV_300	KIT CASSONETTO SUPPLEMENTARE PER BOBINE FILO	161
TAV_305	KIT STAFFE SUPPLEMENTARI PER ROTOLO RETE	163
TAV_310	KIT FILM PLASTICO	165
TAV_355	KIT LAMPEGGIANTE + ECCEZIONALE	167
TAV_380	KIT FINTI COLTELLI	169
TAV_315	DISPOSITIVO DI STAZIONAMENT MECCANICO	171
TAV_320	DISPOSITIVO STAZIONAMENTO IDRAULCO (CUT)	173
TAV_325	FRENO IDRAULICO (NO OMOLOGAZIONE ITALIA)	175
TAV_360	ESPLOSO MOZZO CON FRENO	177
TAV_330	DECAL "LOGO"	179
TAV_335	DECAL "CE"	181
TAV_340	DECAL "INSTRUZIONE"	183

N° Table	*INDEX*	*Page*
TAV_195	*PICK-UP CUT HYDRAULIC TRANSMISSION*	*111*
TAV_200	*PICK-UP M WHEELS*	*113*
TAV_205	*PICK-UP L WHEELS*	*115*
TAV_210	*MACHINE HYDRAULIC SYSTEM*	*117*
TAV_215	*GEOMETRY-PRESSURE VALVE (ELECTRONIC AND MECHANICAL)*	*119*
TAV_220	*CONTROL SYSTEM*	*121*
TAV_225	*TWINE BINDER*	*123*
TAV_230	*TWINE BINDER: TWINE BOX*	*127*
TAV_235	*FRONT CARTER (ONLY WITH TWINE BINDER)*	*129*
TAV_240	*NET BINDER (PART 1)*	*131*
TAV_245	*NET BINDER (PART 2)*	*133*
TAV_250	*NETE BINDER (PART 3)*	*135*
TAV_255	*NET BINDER (PART 4)*	*137*
TAV_260	*NET BINDER (PART 5)*	*139*
TAV_265	*AUTOMATIC OILING SYSTEM*	*143*
TAV_270	*AUTOMATIC OILING CUT SYSTEM*	*145*
TAV_275	*FRONT CARTER*	*149*
TAV_280	*SIDE CARTER*	*151*
TAV_285	*LIGHTS PLANT + CHOCKS*	*155*
TAV_290	*EJECTOR*	*157*
TAV_295	*STAPLING DEVICE*	*159*
TAV_300	*ADDITIONAL TWINE BOX KIT*	*161*
TAV_305	*ADDITIONAL NET SUPPORT KIT*	*163*
TAV_310	*PLASTIC FILM KIT*	*165*
TAV_355	*FLASHING + EXCEPTIONAL KIT*	*167*
TAV_380	*FAKE KINIVES KIT*	*169*
TAV_315	*MECHANICAL PARKING DEVICE*	*171*
TAV_320	*HYDRAULIC PARKING DEVICE (CUT)*	*173*
TAV_325	*HYDRAULIC BRAKE (NO ITALY APPROVAL)*	*175*
TAV_360	*HUB WITH BRAKE PARTS*	*177*
TAV_330	*DECAL "LOGO"*	*179*
TAV_335	*DECAL "CE"*	*181*
TAV_340	*DECAL "INSTRUCTION"*	*183*

TAV_010

(*) 90 = SOLO PER GERMANIA
ONLY FOR GERMANY

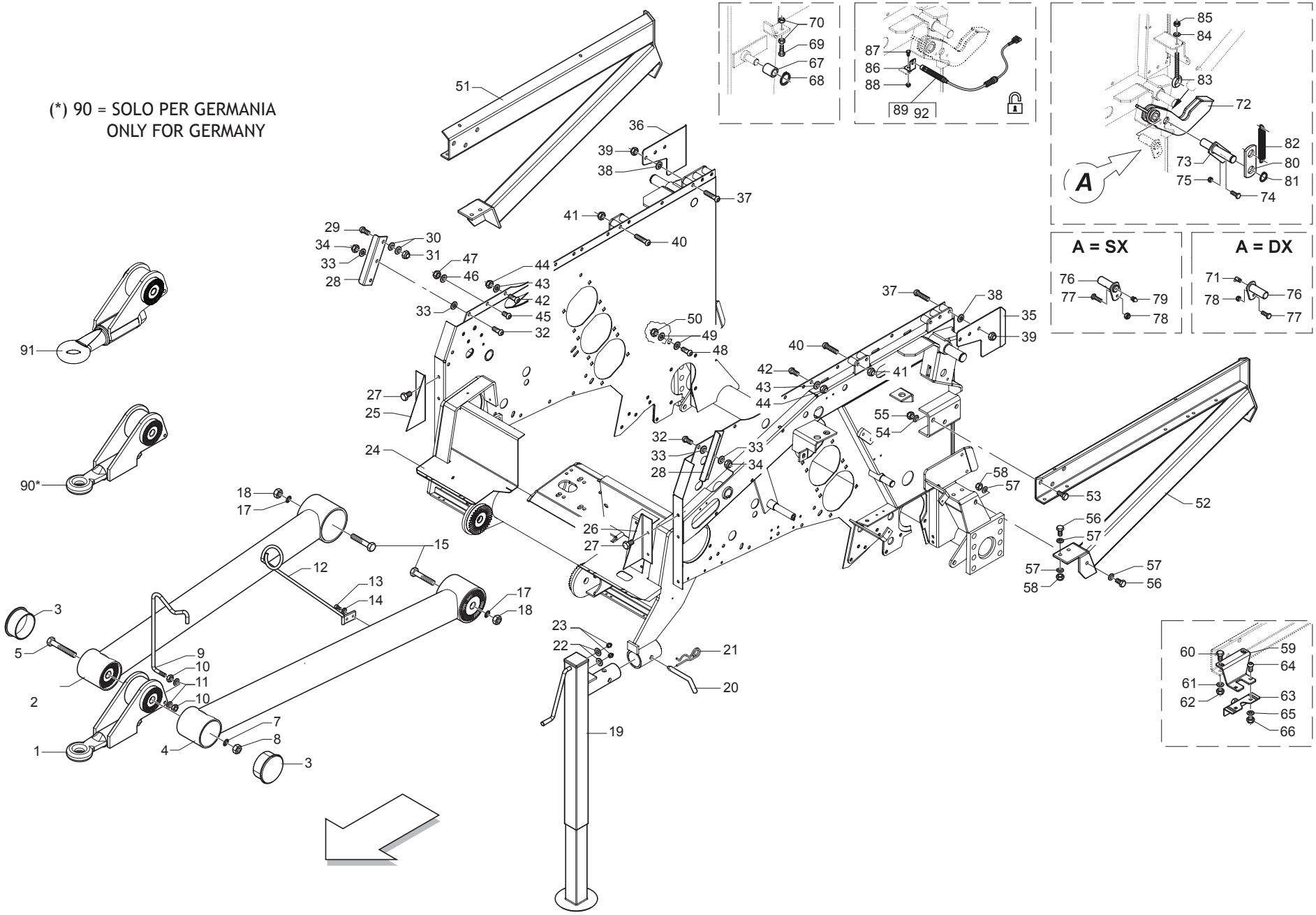

MASCHIO

cod. F07022338

TELAIO INFERIORE + TIMONE + ROLLBAR + GANCI
LOWER FRAME + CROSSBAR + ROLLBAR + HOOKS

TAV_010

Pos.	Cod.	Descrizione	Description	Description	Benennung	Descripcion
1	B07S01750R	TRAINO 35	TOWING EYE 35	EQUIPEMENT DE TIRAGE DIAM. 35	ZUGOESE 35	REMOLQUE 35
2	B07SP1101R	ALA DX TIMONE	RIGHT WING HELM			ALA DER DEL TIM N
3	B07V00099R	TAPPO PER OCCHIONE	PLUG FOR TOWING EYE	BOUCHON POUR OEIL DE TRACTION	ZUGOESENSCHLIESSPFROPFEN	TAP N PARA ANILLO
4	B07SP1102R	ALA SX TIMONE	WING LEFT HELM			ALA IZQ DEL TIM N
5	F01020628R	VITE M24X3X180 U5737 10.9ZB	SCR. M24X3X180 U5737 10.9ZB	VIS M24X3X180 5739 10.9 ZN	SCHRAUBE M24X3X180 5739 10.9 Z	TORNILLO M24X3X180 U5737 1
7	F01480261R	RONDELLA D24 UNI 1751 ZN	WASHER D24 U1751 ZN			ARANDELA D24 UNI 1751 ZN
8	B00740724R	DADO E ZN.MEDIO M24-8G A U5588	NUT	ECROU	MUTTER M24-8G	TUERCA M24X 2 D982 8
9	B0C005121R	SOSTEGNO CARDANO	CARDAN SHAFT SUPPORT	SUPPORT CARDAN	KARDANWELLENHALTER	SOPORTE DE CARD N
10	F01230213R	DADO M12X1,75 U7474 CL8 ZN	NUT M12X1,75 U7474 6SZN	ECROU AUTOBL. M12	SELBSTSPERR.MUTTER M12	TUERCA M12X1,75 U7474 CL8 ZN
11	F01410076R	ROS.M12 13X 24X2,5 U6592 ZN	WASHER 12 13X 24X2,5 U6592 ZN	RONDEL. M12 13X24X2,5 U6592 ZN	SCHEIBE M12 13X24X2,5 U6592 ZN	ARAND.M12 13X 24X2,5 U6592 ZN
12	B07S01825R	SOSTEGNO TUBAZIONI	HOSE SUPPORT	SUPPORT TUYAUTERIES	SCHLAUCHHALTERUNG	SOPORTE DE LAS TUBER AS
13	B00471025R	VITE TTEI M10X 25-8.8 UNBRA	SCREW	VIS	SCHRAUBE TTEI M10X 25-8.8	TORNILLO CAB.ALLEN CON HUECO
14	F01410062R	ROS.M10 10,5X 18X 2 U6592 ZN	WASHER M10 10,5X 18X 2 U6592	RONDELLE M10 10,5X18X2 ZN	DICHTUNGSRING M10 10,5X18X2 ZN	ARAND.M10 10,5X 18X 2 U6592 ZN
15	F01020343R	VITE M24X3X80 U5737 10.9ZD	SCR. M24X3X80 U5737 10.9ZD	VIS M24X3X80 U5737 10.9 ZN	SCHRA. M24X3X80 U5737 10.9 ZN	TORNILLO M24X3X80 U5737 10
17	F01480261R	RONDELLA D24 UNI 1751 ZN	WASHER D24 U1751 ZN			ARANDELA D24 UNI 1751 ZN
18	B00740724R	DADO E ZN.MEDIO M24-8G A U5588	NUT	ECROU	MUTTER M24-8G	TUERCA M24X 2 D982 8
19	B07S01755R	SERVOTIMONE	DRAW BAR STAND	SERVO BARRE DE TIRAGE	STUETZFUSS	SERVOTIM N
20	B013C0001R	SPINA 16X158 CON PIEGA	PIN	GOUPILLE	STIFT	CLAVIJA 16X158 CON PLIEGUE
21	B011B0499R	SPINA A MOLLA A DOPPIO GIRO 4	PIN	GOUPILLE CLIPS	ZAPFEN	CLAVIJA DE MUELLE CON DOBLE G
22	F01410051R	ROS.M8 8,4X 17X1,6 U6592 ZN	WASHER M8 8,4X17X1,6 U6592 ZN	RONDELLE M8 8,4X17X1,6 ZN	SCHEIBE M8 8,4X17X1,6 U6592 ZN	ARAND.M8 8,4X 17X1,6 U6592 ZN
23	B04200810R	INGRAS HYDR M 8X1 DRITTO	GREASE	GRAISSEUR HYDRAULIQUE	GERADER SCHMIERNIPPEL M8X1	ENGRAS. HYDR M 8X1 RECTO
24	B07SP1005R	TELAIO INFERIORE 220-265-280	LOWER FRAME 220-265-280	CHASSIS INFERIEUR 220-265-280	220 265 280 UNTERER RAHMEN	BASTIDOR INFERIOR 220-265-280
25	B0C005036R	CHIUSURA ANT. DX	RIGHT FRONT LOCK	FERMETURE ANTERIEURE DROITE	RECHTER VORDERER VERSCHLUSS	CIERRE ANT. DER.
26	B0C005035R	CHIUSURA ANT. SX	LEFT FRONT LOCK	FERMETURE ANTERIEURE GAUCHE	LINKER VORDERER VERSCHLUSS	CIERRE ANT. IZQ.
27	F01020436R	VITE M8X1,25X20 U5739 8.8ZN	SCR. M8X1,25X20 U5739 8.8ZN	VIS M8X1,25X 20 U5739 8.8 ZN	SCHRAUBE M8X1,25X20U5739 8.8ZN	TORNILLO M8X1,25X20 U5739 8.8
28	B0C005026R	RINFORZO TELAI	FRAME STIFFENING			REFUERZO DE LOS BASTIDORES
29	B00471230R	VITE TTEI M12X 30-8.8 UNBRA	SCREW	VIS	SCHRAUBE TTEI M12X 30-8.8	TORNILLO CAB.ALLEN CON HUECO
30	F01410076R	ROS.M12 13X 24X2,5 U6592 ZN	WASHER 12 13X 24X2,5 U6592 ZN	RONDEL. M12 13X24X2,5 U6592 ZN	SCHEIBE M12 13X24X2,5 U6592 ZN	ARAND.M12 13X 24X2,5 U6592 ZN
31	F01230213R	DADO M12X1,75 U7474 CL8 ZN	NUT M12X1,75 U7474 6SZN	ECROU AUTOBL. M12	SELBSTSPERR.MUTTER M12	TUERCA M12X1,75 U7474 CL8 ZN
32	B00471230R	VITE TTEI M12X 30-8.8 UNBRA	SCREW	VIS	SCHRAUBE TTEI M12X 30-8.8	TORNILLO CAB.ALLEN CON HUECO
33	F01410076R	ROS.M12 13X 24X2,5 U6592 ZN	WASHER 12 13X 24X2,5 U6592 ZN	RONDEL. M12 13X24X2,5 U6592 ZN	SCHEIBE M12 13X24X2,5 U6592 ZN	ARAND.M12 13X 24X2,5 U6592 ZN
34	F01230213R	DADO M12X1,75 U7474 CL8 ZN	NUT M12X1,75 U7474 6SZN	ECROU AUTOBL. M12	SELBSTSPERR.MUTTER M12	TUERCA M12X1,75 U7474 CL8 ZN
35	B0C004488R	RIPARO GANCIO SX	SHELTER HOOK LEFT			RESGUARDO GANCHO IZQ
36	B0C004506R	RIPARO GANCIO DX	RIGHT HOOK GUARD	PROTECTION CROCHET DROIT	RECHTER HAKENSCHUTZ	RESGUARDO GANCHO DER
37	B00471280R	VITE TTEI M12X 80-10.9 UNBRAKO	SCREW	VIS	SCHRAUBE TTEI M12X 80-8.8	TORNILLO CAB.ALLEN CON HUECO
38	F01410076R	ROS.M12 13X 24X2,5 U6592 ZN	WASHER 12 13X 24X2,5 U6592 ZN	RONDEL. M12 13X24X2,5 U6592 ZN	SCHEIBE M12 13X24X2,5 U6592 ZN	ARAND.M12 13X 24X2,5 U6592 ZN
39	F01230213R	DADO M12X1,75 U7474 CL8 ZN	NUT M12X1,75 U7474 6SZN	ECROU AUTOBL. M12	SELBSTSPERR.MUTTER M12	TUERCA M12X1,75 U7474 CL8 ZN
40	B00471280R	VITE TTEI M12X 80-10.9 UNBRAKO	SCREW	VIS	SCHRAUBE TTEI M12X 80-8.8	TORNILLO CAB.ALLEN CON HUECO
41	F01230213R	DADO M12X1,75 U7474 CL8 ZN	NUT M12X1,75 U7474 6SZN	ECROU AUTOBL. M12	SELBSTSPERR.MUTTER M12	TUERCA M12X1,75 U7474 CL8 ZN
42	B00471225R	VITE TTEI M12X 25-8.8 UNBRA	SCREW	VIS	SCHRAUBE TTEI M12X 25-8.8	TORNILLO CAB.ALLEN CON HUECO
43	F01410076R	ROS.M12 13X 24X2,5 U6592 ZN	WASHER 12 13X 24X2,5 U6592 ZN	RONDEL. M12 13X24X2,5 U6592 ZN	SCHEIBE M12 13X24X2,5 U6592 ZN	ARAND.M12 13X 24X2,5 U6592 ZN
44	F01230213R	DADO M12X1,75 U7474 CL8 ZN	NUT M12X1,75 U7474 6SZN	ECROU AUTOBL. M12	SELBSTSPERR.MUTTER M12	TUERCA M12X1,75 U7474 CL8 ZN
45	B00471220R	VITE TTEI M12X 20-8.8 UNBRA	SCREW	VIS	SCHRAUBE TTEI M12X 20-8.8	TORNILLO CAB.ALLEN CON HUECO
46	F01410076R	ROS.M12 13X 24X2,5 U6592 ZN	WASHER 12 13X 24X2,5 U6592 ZN	RONDEL. M12 13X24X2,5 U6592 ZN	SCHEIBE M12 13X24X2,5 U6592 ZN	ARAND.M12 13X 24X2,5 U6592 ZN
47	F01230213R	DADO M12X1,75 U7474 CL8 ZN	NUT M12X1,75 U7474 6SZN	ECROU AUTOBL. M12	SELBSTSPERR.MUTTER M12	TUERCA M12X1,75 U7474 CL8 ZN
48	B00471225R	VITE TTEI M12X 25-8.8 UNBRA	SCREW	VIS	SCHRAUBE TTEI M12X 25-8.8	TORNILLO CAB.ALLEN CON HUECO
49	F01420120R	ROS.M12 13X36X2,5 U6593 ZN	WASHER M12 13X36X2,5 U6593 ZN	RONDELLE M12 13X36X2,5 ZN		ARAND.M12 13X36X2,5 U6593 ZN
50	F01230213R	DADO M12X1,75 U7474 CL8 ZN	NUT M12X1,75 U7474 6SZN	ECROU AUTOBL. M12	SELBSTSPERR.MUTTER M12	TUERCA M12X1,75 U7474 CL8 ZN
51	B07S01663R	TELAIO ROLL DX 265-280	RIGHT ROLL FRAME	CHASSIS ROLL DROIT 265-280	RECHTER ROLL RAHMEN	BASTIDOR ROLL DER 265-280
52	B07S01550R	TELAIO ROLL SX 265-280	LEFT ROLL FRAME	CHASSIS ROLL GAUCHE 265 280	LINKER ROLL RAHMEN	BASTIDOR ROLL IZQ 265-280
53	F01020566R	VITE M16X2X40 U5739 8.8ZN	SCR. M16X2X40 U5739 8.8ZN	VIS M16X2X40 U5739 8.8 ZN	SCHRAUBE M16X2X40 U5739 8.8 ZN	TORNILLO M16X2X40 U5739 8
54	F01410100R	ROS.M16 17X 30X 3 U6592 ZN	WASHER M16 17X30X3 U6592 ZN	RONDELLE M16 17X30X3 ZN	SCHRAUBE M16 17X 30X3 U6592 ZN	ARAND.M16 17X 30X 3 U6592 ZN
55	B00920516R	DADO M16X 1,5 D985 6S ZN	NUT M16X1,5 D985 6S ZN	ECROU	SELBSTSICHERNDE MUTTER M16-5S	TUERCA M16X 1,5 D985 6S
56	F01020514R	VITE M12X1,75X40 U5739 8.8ZN	SCR. M12X1,75X40 U5739 8.8ZN	VIS M12X1,75X40 U5739 8.8ZN	SCHRA. M12X1,75X40 U5739 8.8ZN	TORNILLO M12X1,75X40 U5739 8.
57	F01410076R	ROS.M12 13X 24X2,5 U6592 ZN	WASHER 12 13X 24X2,5 U6592 ZN	RONDEL. M12 13X24X2,5 U6592 ZN	SCHEIBE M12 13X24X2,5 U6592 ZN	ARAND.M12 13X 24X2,5 U6592 ZN
58	F01230213R	DADO M12X1,75 U7474 CL8 ZN	NUT M12X1,75 U7474 6SZN	ECROU AUTOBL. M12	SELBSTSPERR.MUTTER M12	TUERCA M12X1,75 U7474 CL8 ZN
59	B0C005184R	ATTACCO CHIUSURA	CLOSURE COUPLING	ATTELAGE FERMETURE	VERSCHLUSSANSCHLUSS	CONEXI N DE CIERRE

TAV_010

(*) 90 = SOLO PER GERMANIA
ONLY FOR GERMANY

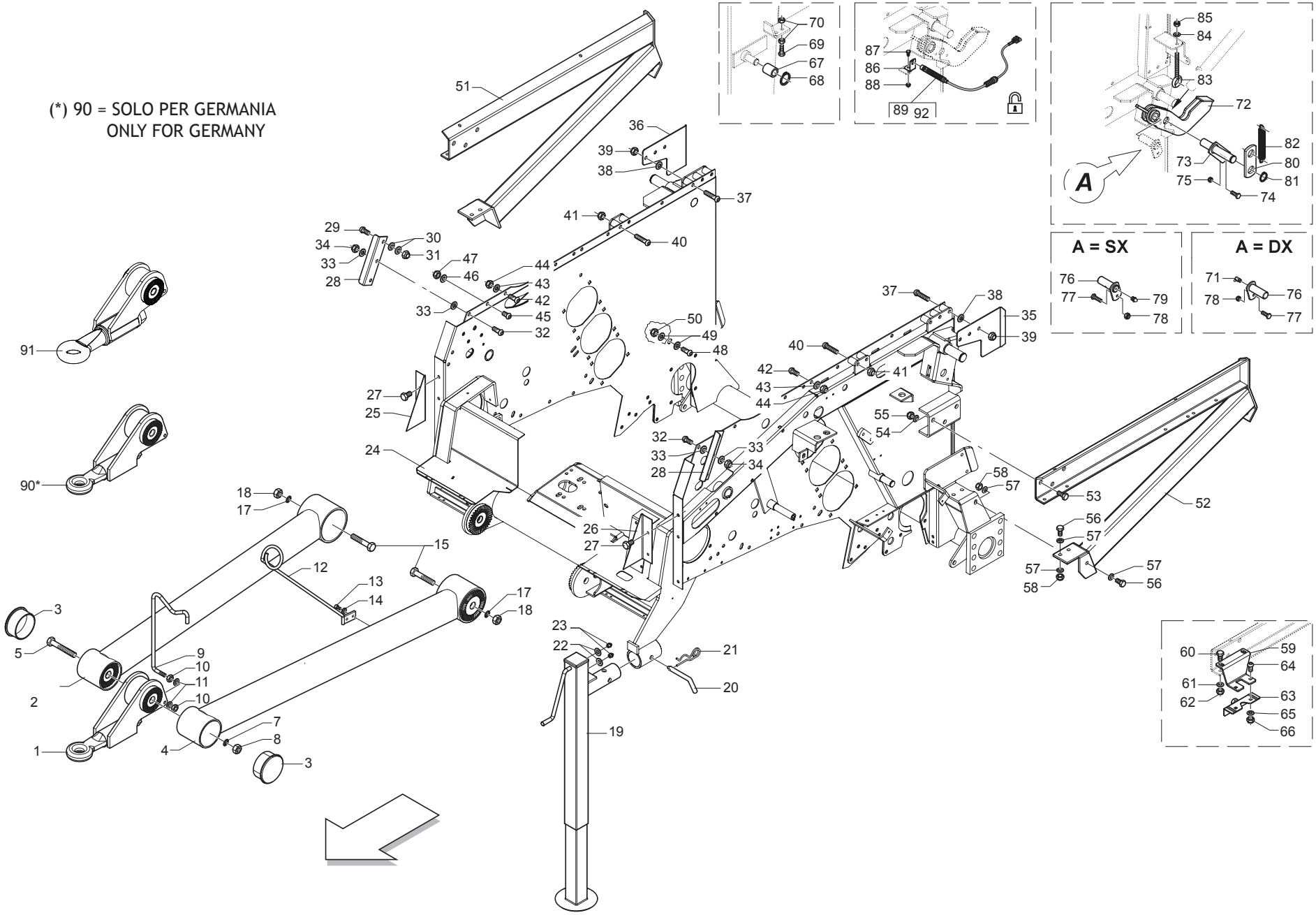

MASCHIO

cod. F07022338

TELAIO INFERIORE + TIMONE + ROLLBAR + GANCI
LOWER FRAME + CROSSBAR + ROLLBAR + HOOKS

TAV_010

Pos.	Cod.	Descrizione	Description	Description	Benennung	Descripcion
60	F01020479R	VITE M10X1,5X35 U5739 8.8ZN	SCR. M10X1,5X35 U5739 8.8ZN	VIS M10X1,5X35 U5739 8.8 ZN	SCHR. M10X1,5X35 U5739 8.8 ZN	TORNILLO M10X1,5X35 U5739 8
61	F01410062R	ROS.M10 10,5X 18X 2 U6592 ZN	WASHER M10 10,5X 18X 2 U6592	RONDELLE M10 10,5X18X2 ZN	DICHTUNGSRING M10 10,5X18X2 ZN	ARAND.M10 10,5X 18X 2 U6592 ZN
62	F01230202R	DADO M10X 1,5 D985 8 ZN	NUT M10 D985	ECROU AUTOBL. M10	SELBSTSPERR.MUTTER M10	TUERCA M10X 1,5 D985 8
63	B01800041R	CHIUS.SCHWARZ RIF.SV 941104-00	LOCK	FERMETURE	VERSCHLUSS SCHWARZ REF. SV. 9	CIERRE SCHWARZ REF.SV 941104-0
64	F01030208R	VITE M 8X1,25X 20 U7380 10.9ZN	SCREW M8X1,25X20 U7380 10.9ZN			TORNILLO M 8X1,25X 20 U7380 10
65	F01410051R	ROS.M8 8,4X 17X1,6 U6592 ZN	WASHER M8 8,4X17X1,6 U6592 ZN	RONDELLE M8 8,4X17X1,6 ZN	SCHEIBE M8 8,4X17X1,6 U6592 ZN	ARAND.M8 8,4X 17X1,6 U6592 ZN
66	B00920208R	DADO AUTOB.BASSO M 8-5S D985	NUT M8X1 D985 8ZN	ECROU	SELBSTSICHERNDE MUTTER M8-5S	TUERCA M8X1 D985 8
67	B01300612R	DISTANZIALE 30,5X42X45	SPACER	ENTRETOISE	DISTANZSTUECK 30,5X42X45	DISTANCIADOR 30,5X42X45
68	F02050112R	ANELLO E.DE 30X 1,5 U7435 ZN	SEEGER RING 30X 1,5 U7435 C70	SEEGER E. 30 X 1,5 U7435 C70	SEEGERING E. 30X 1,5 U7435 C70	ANILLO E. 30 X 1,5 U7435 C70
69	F01020519R	VITE M12X1,75X 60 U5739 8.8ZN	SCREW M12X1,75X 60 U5739 8.8ZN			TORNILLO M12X1,75X 60 U5739 8
70	F01200293R	DADO M12X1,75 U5588 CL8 ZN	NUT M12X1,75 U5588 6S ZN	ECROU M12X1,75 U5588 6S ZN	MUTTER M12X1,75 U5588 6S ZN	TUERCA M12X1,75 U5588 CL8 ZN
71	F01100013R	ING.M 6X1 7663-C 9SMNPB28 ZN	SPHERE NIPPLE M6X1 90	GRAISSEUR A BILLES M6X1 90	KUGELFETTBSCHSE M6X1 90	ENG.M 6X1 7663-C 9SMNPB28 ZN
72	B07S01772R	GANCIO PORTELLONE	REAR GATE HOOK	CROCHET PORTE ARRIERE	HECKKLAPPENHAKEN	GANCHO DE LA PUERTA
73	B07S01757R	SPINA MARTINETTO PORTELLONE	REAR GATE CYLINDER PIN	GOUPILLE VERIN PORTE ARRIERE	HECKKLAPPENZYLINDERBOLZEN	CLAVIJA DEL CILINDRO DE LA PUE
74	F01020440R	VITE M8X1,25X25 U5739 8.8ZN	SCR. M8X1,25X25 U5739 8.8ZN	VIS M8X1,25X25 U5739 8.8 ZN	SCHRAUBE M8X1,25X25U5739 8.8ZN	TORNILLO M8X1,25X25 U5739 8.8
75	B00920208R	DADO AUTOB.BASSO M 8-5S D985	NUT M8X1 D985 8ZN	ECROU	SELBSTSICHERNDE MUTTER M8-5S	TUERCA M8X1 D985 8
76	B07S00937R	SPINA GANCIO PORTELLONE	TAILGATE HOOK PIN	AXE ACCROCHAGE PORTE POST.	HECKKLAPPENHAKENBOLZEN	CLAVIJA DE GANCHO DE LA PUERT
77	F01020440R	VITE M8X1,25X25 U5739 8.8ZN	SCR. M8X1,25X25 U5739 8.8ZN	VIS M8X1,25X25 U5739 8.8 ZN	SCHRAUBE M8X1,25X25U5739 8.8ZN	TORNILLO M8X1,25X25 U5739 8.8
78	B00920208R	DADO AUTOB.BASSO M 8-5S D985	NUT M8X1 D985 8ZN	ECROU	SELBSTSICHERNDE MUTTER M8-5S	TUERCA M8X1 D985 8
79	B04200610R	INGRASS.A SFERE M6X1 LUNGO	GREASE NIPPLE	GRAISSEUR HYDRAULIQUE	GERADER SCHMIERNIPPEL M6X1	ENGRASADOR DE ESFERAS M6X1
80	B0C004902R	RINFORZO	STIFFENING	RENFORT	VERSTAERKUNG	REFUERZO
81	B01700020R	ANEL. D ARR. ALB. 20-E UNI3653	SEEGER RING	BAGUE SEEGER	SEEGERRING 20-E	ANIL. DE PARAD. RB. 20-E UNI3
82	B01826161R	MOLLA CONTRASTO RULLO	SPRING	RESSORT	FEDER	MUELLE DE CONTRASTE DEL RODI
83	B00545168R	OCCHIOLO PER TENDITORI M12-DX	EYELET M12	OEIL M12	OSE M12	OJAL PARA TENSORES M12-DER
84	F01410076R	ROS.M12 13X 24X2,5 U6592 ZN	WASHER 12 13X 24X2,5 U6592 ZN	RONDEL. M12 13X24X2,5 U6592 ZN	SCHEIBE M12 13X24X2,5 U6592 ZN	ARAND.M12 13X 24X2,5 U6592 ZN
85	F01230213R	DADO M12X1,75 U7474 CL8 ZN	NUT M12X1,75 U7474 6SZN	ECROU AUTOBL. M12	SELBSTSPERR.MUTTER M12	TUERCA M12X1,75 U7474 CL8 ZN
86	B0C004245R	SOSTEGNO	SUPPORT	SUPPORT	HALTER	SOPORTE
87	F01020470R	VITE M10X1,5X20 U5739 8.8ZN	SCR. M10X1,5X20 U5739 8.8ZN	VIS M10X1,5X20 U5739 8.8 ZN	SCHRAUBE M10X1,5X20 U5739 ZN	TORNILLO M10X1,5X20 U5739 8
88	F01230202R	DADO M10X 1,5 D985 8 ZN	NUT M10 D985	ECROU AUTOBL. M10	SELBSTSPERR.MUTTER M10	TUERCA M10X 1,5 D985 8
89	B0E0P0016R	SENSORE GANCIO DX F_BUS	SENSOR	SENSEUR	SENSOR HACKEN RECHTS	SENSOR DE ENGANCHE DER F_BU
90	B07SP0974R	OCCHIONE FISSO D=40 MM CON BOC	FIXED TOWING EYE 40 WITH BUSH			ANILLO FIJO D=40 MM CON BOC
91	B07S01789R	TRAINO 50	TOWING EYE 50	TIRAGE	ZUG 50	REMOLQUE 50
92	B0E0P0017R	SENSORE GANCIO SX F_BUS	SENSOR	SENSEUR	SENSOR HACKEN LINKS	SENSOR DE ENGANCHE IZQ F_BUS

TAV_015

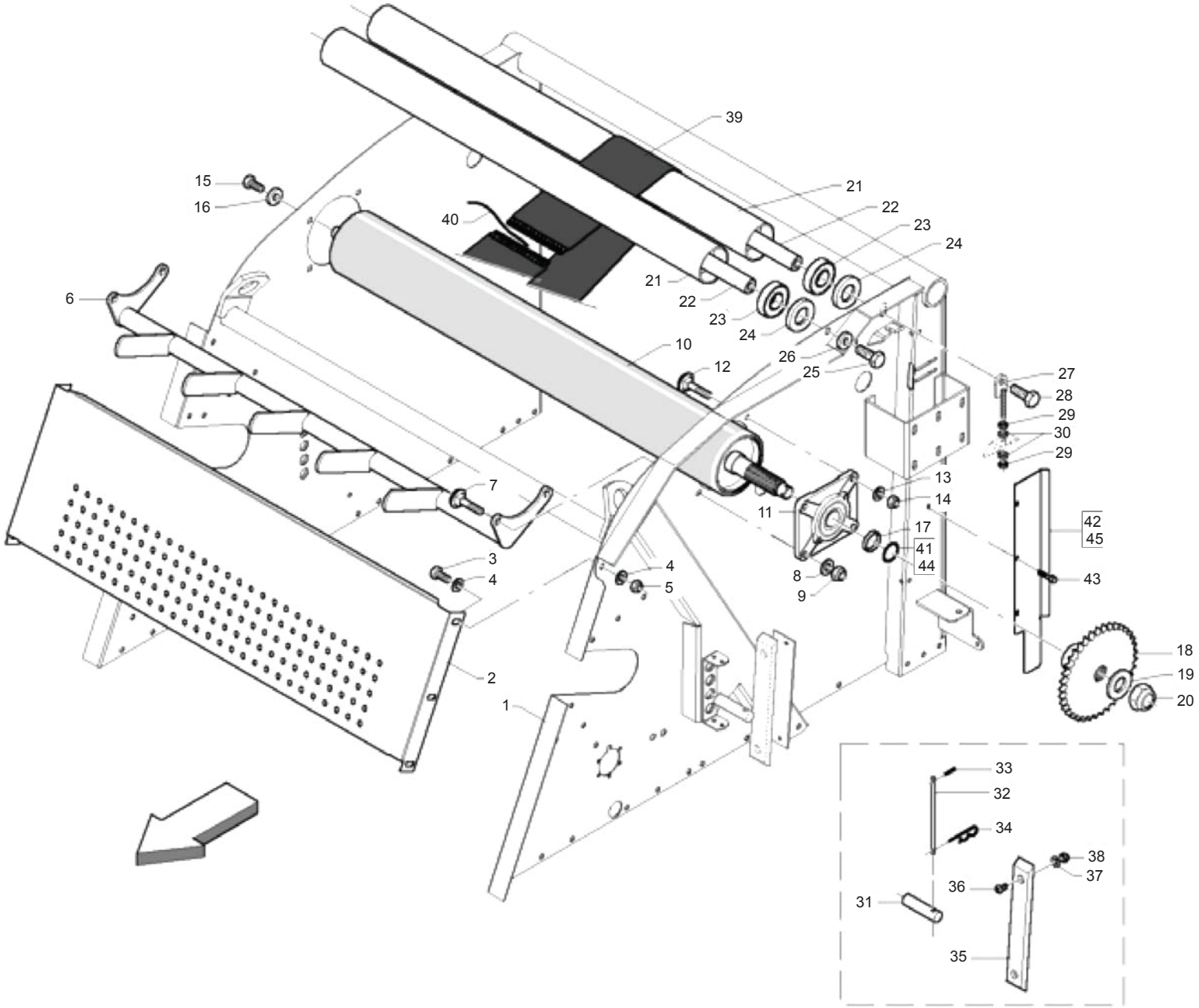

MASCHIO

cod. F07022338

TELAIO SUPERIORE
UPPER FRAME

TAV_015

Pos.	Cod.	Descrizione	Description	Description	Benennung	Descripcion
1	B07S01626R	TELAIO SUPERIORE 265	UPPER FRAME 265	CHASSIS SUPERIEUR 265	OBERER RAHMEN 265	BASTIDOR SUPERIOR 265
2	B0C100015R	COLLEGAMENTO ANT.265-280	FRONT CONNECTION	CONNEXION ANTERIEURE 265-280	VORDERE KUPPLUNG	CONEXI N ANT.265-280
3	F01020510R	VITE M12X1,75X30 U5739 8.8ZN	SCR. M12X1,75X30 U5739 8.8ZN	VIS M12X1,75X30 U5739 8.8ZN	SCHRAU.M12X1,75X30 U5739 8.8ZN	TORNILLO M12X1,75X30 U5739
4	F01410076R	ROS.M12 13X 24X2,5 U6592 ZN	WASHER 12 13X 24X2,5 U6592 ZN	RONDEL. M12 13X24X2,5 U6592 ZN	SCHEIBE M12 13X24X2,5 U6592 ZN	ARAND.M12 13X 24X2,5 U6592 ZN
5	F01230213R	DADO M12X1,75 U7474 CL8 ZN	NUT M12X1,75 U7474 6SZN	ECROU AUTOBL. M12	SELBSTSPERR.MUTTER M12	TUERCA M12X1,75 U7474 CL8 ZN
6	B07S00941R	GUIDACINGHIE ANT.	FRONT BELT GUIDE	GUIDE-COURROIES ANTERIEUR	VORDERE GURTENFUEHRUNG	GU A DE LAS CORREAS DELAT.
7	B00523395R	VITE SPECIALE TTQST M12X45-8.8	SPECIAL SCREW	VIS SPECIALE	SCHRAUBE TTQST M12X 45-8.8	TORNILLO ESPECIAL TTQST M12X4
8	F01410076R	ROS.M12 13X 24X2,5 U6592 ZN	WASHER 12 13X 24X2,5 U6592 ZN	RONDEL. M12 13X24X2,5 U6592 ZN	SCHEIBE M12 13X24X2,5 U6592 ZN	ARAND.M12 13X 24X2,5 U6592 ZN
9	F01230213R	DADO M12X1,75 U7474 CL8 ZN	NUT M12X1,75 U7474 6SZN	ECROU AUTOBL. M12	SELBSTSPERR.MUTTER M12	TUERCA M12X1,75 U7474 CL8 ZN
10	B03500234R	RULLO GOMMATO 3500217	RUBBER ROLLER	ROULEAU CAOUTCHOUTE	GUMMIWALZE	RODILLO DE GOMA 3500217
11	B02700051R	SUPPORTO FLANGIATO	FLANGED SUPPORT	SUPPORT EMBOUTI	FLANSCHLAGER	SOPORTE CON BRIDA
12	B00523421R	VITE SPECIALE TTQST M12X35-8.8	SPECIAL SCREW	VIS SPCIALE	SCHRAUBE TTQST M12X 35-8.8	TORNILLO ESPECIAL TTQST M12X3
13	F01410076R	ROS.M12 13X 24X2,5 U6592 ZN	WASHER 12 13X 24X2,5 U6592 ZN	RONDEL. M12 13X24X2,5 U6592 ZN	SCHEIBE M12 13X24X2,5 U6592 ZN	ARAND.M12 13X 24X2,5 U6592 ZN
14	F01230213R	DADO M12X1,75 U7474 CL8 ZN	NUT M12X1,75 U7474 6SZN	ECROU AUTOBL. M12	SELBSTSPERR.MUTTER M12	TUERCA M12X1,75 U7474 CL8 ZN
15	F01020564R	VITE M16X2X35 U5739 8.8ZN	SCR. M16X2X35 U5739 8.8ZN	VIS M 16X35	SCHRAUBE M 16X35	TORNILLO M16X2X35 U5739 8
16	B01515091R	RALLA 17 52 6	FIFTH WHEEL	BUTEE	SCHEIBE	RANGUA 17 52 6
17	B01300845R	DISTANZIALE 40X50X4	SPACER	ENTRETOISE	DISTANZSCHEIBE 40X50X4	DISTANCIADOR 40X50X4
18	B03400288R	INGR.RULLO GOMMATO Z=25-1	ROLLER WITH TYRES GEAR Z=25-1	ENGRANAGE	ZAHNRAD Z=25-1	ENGR. DE RODILLO DE GOMA
19	B014R3050R	ROSETTA 30 UNI 5714-69 E DEIDR	WASHER	RONDELLE	BEILAGSSCHEIBE	ARANDELA 30 UNI 5714-69 E DEID
20	F01230291R	DADO M30X2 D985 ZN	NUT M30X2 D985 ZN	ECROU AUTOB. M30X2 DIN 985 ZN	SELBSTSP. MU. M30X2 DIN 985 ZN	TUERCA M30X2 D985 ZN
21	B03500172R	RULLO FOLLE	IDLE ROLLER	ROULEAU FOU	UMLENKWALZE	RODILLO LOCO
22	B03500214R	ALBERO LUNGO	LONG SHAFT	ARBRE LONG	LANGE WELLE	RBOL LARGO
23	B02040002R	CUSCINETTO 6307-2RS CAT.KST004	BEARING	ROULEMENT CAT.KST004	LAGER 6307-2RS	COJINETE 6307-2RS CAT.KST004
24	B01300623R	CHIUSURA RULLI FOLLI	IDLE ROLLER LOCK	FERMETURE ROULEAUX FOUX	UMLENKWALZENVERSCHLUSS	CIERRE DE RODILLOS LOCOS
25	F01020564R	VITE M16X2X35 U5739 8.8ZN	SCR. M16X2X35 U5739 8.8ZN	VIS M 16X35	SCHRAUBE M 16X35	TORNILLO M16X2X35 U5739 8
26	B01519319R	RALLA 16X38X5	FIFTH WHEEL	BUTEE	SCREIBE	RANGUA 16X38X5
27	B07S01608R	REGOLATORE RULLO	ROLLER ADJUSTER	REGLEUR ROULEAU	WALZENEINSTELLER	REGULADOR DEL RODILLO
28	F01020564R	VITE M16X2X35 U5739 8.8ZN	SCR. M16X2X35 U5739 8.8ZN	VIS M 16X35	SCHRAUBE M 16X35	TORNILLO M16X2X35 U5739 8
29	F01200293R	DADO M12X1,75 U5588 CL8 ZN	NUT M12X1,75 U5588 6S ZN	ECROU M12X1,75 U5588 6S ZN	MUTTER M12X1,75 U5588 6S ZN	TUERCA M12X1,75 U5588 CL8 ZN
30	F01410076R	ROS.M12 13X 24X2,5 U6592 ZN	WASHER 12 13X 24X2,5 U6592 ZN	RONDEL. M12 13X24X2,5 U6592 ZN	SCHEIBE M12 13X24X2,5 U6592 ZN	ARAND.M12 13X 24X2,5 U6592 ZN
31	B01300647R	SPINA DI REGOLAZIONE	ADJUSTMENT PIN	AXE DE REGLAGE	AUSRICHTEPASSSTIFT	CLAVIJA DE REGULACI N
32	B01300646R	SPINA DI FERMO	LOCK PIN	AXE D ARRET	ARRETIERSTIFT	CLAVIJA DE TOPE
33	B01110325R	SPINA ELAST. 3X 25 SS DIN 1481	PIN	GOUPILLE	STIFT	CLAVIJA EL ST. 3X 25 SS DIN 14
34	F02200352R	COPIGLIA R 2,5X 47 ZN	SPRING SPLIT PIN 2.5X47 B 103	GOUPILLE R 2-5X47 ZN B 103	SPLINT R 2-5X47 ZN B 103	PASADOR R 2,5X 47
35	B07631842R	GUIDA CATENA	CHAIN GUIDE	GUIDE	KETTENFUEHRUNG	GU A DE CADENA
36	F01030208R	VITE M 8X1,25X 20 U7380 10.9ZN	SCREW M8X1,25X20 U7380 10.9ZN			TORNILLO M 8X1,25X 20 U7380 10
37	F01410051R	ROS.M8 8,4X 17X1,6 U6592 ZN	WASHER M8 8,4X17X1,6 U6592 ZN	RONDELLE M8 8,4X17X1,6 ZN	SCHEIBE M8 8,4X17X1,6 U6592 ZN	ARAND.M8 8,4X 17X1,6 U6592 ZN
38	B00920208R	DADO AUTOB.BASSO M 8-5S D985	NUT M8X1 D985 8ZN	ECROU	SELBSTSICHERNDE MUTTER M8-5S	TUERCA M8X1 D985 8
39	B07600072R	CINGHIA PER EXT 265 EXT 165	BELT 165	COURROIE POUR EXT 265 EXT A65	GURT 165	CORREA PARA EXT 265 EXT 165
40	B09962005R	CAVETTO GIUNZIONE MT.1	WIRE 2,5 PLAST.L.1MT	CABLE	KABEL 49 SCHNUREN	CABLE DE UNI N 1 M
41	B01300126R	SPES. 40 48 1 ZINC.ST_013	SHIM	ENTRETOISE	DISTANZSTUECK 40 408 1	ESPES. 40 48 1 CINC.EST_013
42	B0C3P0038R	RIPARO SX PORTELLONE	DOOR GUARD LEFT SIDE	PROTECTION PORTE COTE GAUCHE	TUERSCHUTZ LINKS	RESGUARDO IZQ DE LA PUERTA
43	B00370615R	VITE M 6X16 ZN SEZ.TRIL. U8111	SCREW	VIS	SCHRAUBE	TORNILLO CAB.HEX M 6X16 A SECC
44	B01300125R	SPES. 40 48 0,5 ZINCATO	SHIM GALV	ENTRETOISE GALV	DISTANZSTUECK 40 48 0,5	ESPES. 40 48 0,5 CINCADO
45	B0C3P0039R	RIPARO DX PORTELLONE	DOOR GUARD RIGHT SIDE	PROTECTION PORTE COTE DROIT	TUERSCHUTZ RECHTS	RESGUARDO DER DE LA PUERTA

TAV_020

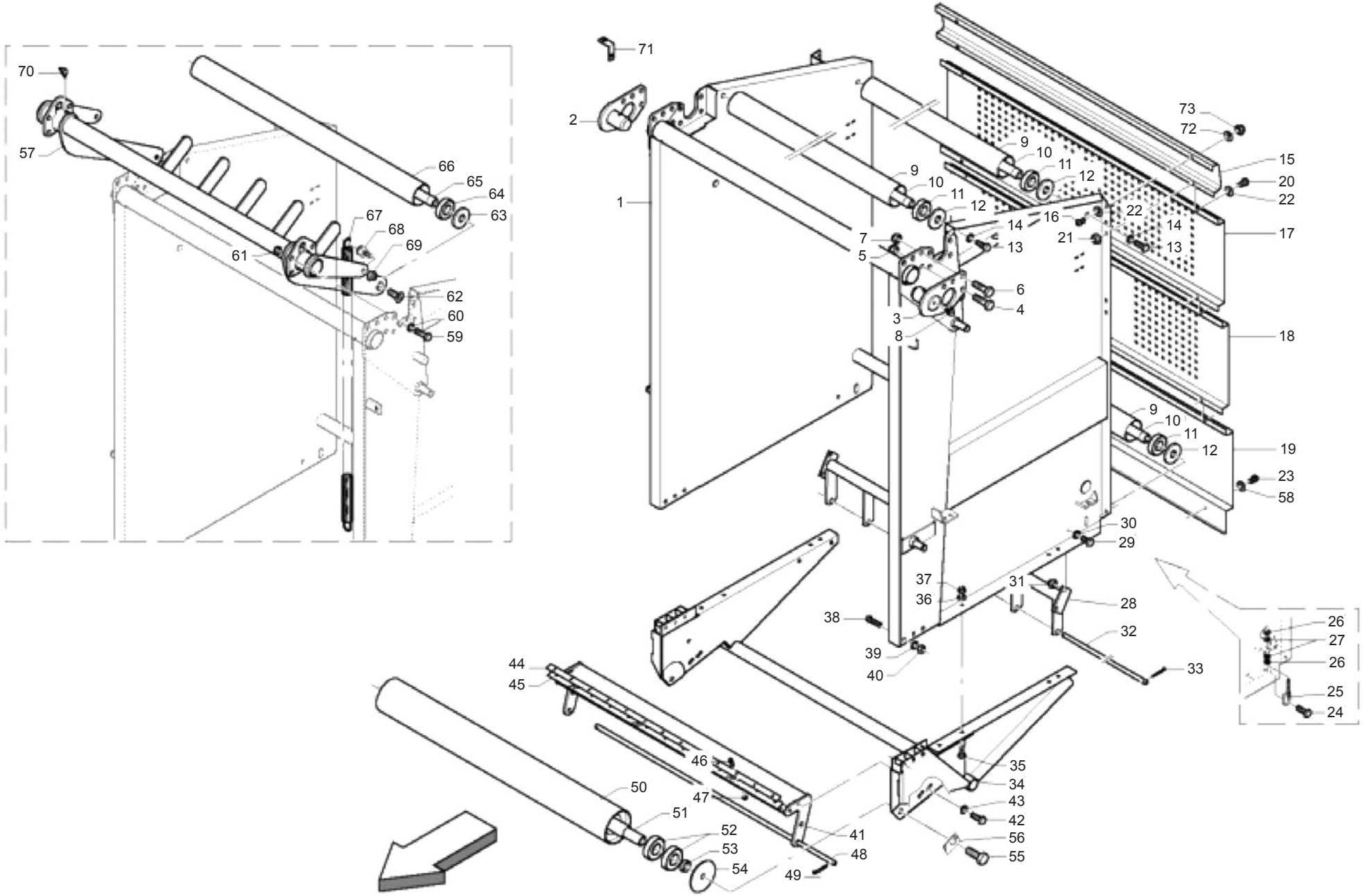

MASCHIO

cod. F07022338

PORTELLONE
REAR GATE

TAV_020

Pos.	Cod.	Descrizione	Description	Description	Benennung	Descripcion
1	B07S01551R	PORTELLONE SUPERIORE 265	UPPER REAR GATE 265	PORTE ARRIERE SUPERIEUR 265	TUER OBEN 265	PUERTA SUPERIOR 265
2	B07S00932R	CERNIERA DX PORTELLONE	RIGHT TAILGATE HINGE	CHARNIERE DROITE PORTE INF.	RECHTES HECKKLAPPENSCHANIER	BISAGRA DER DE LA PUERTA
3	B07S00931R	CERNIERA SX PORTELLONE	LEFT TAILGATE HINGE	CHARNIERE GAUCHE PORTE POST.	LINKES HECKKLAPPENSCHANIER	BISAGRA IZQ DE LA PUERTA
4	F01020568R	VITE M16X2X45 U5739 8.8ZN	SCR. M16X2X45 U5739 8.8ZN	VIS M 16X 2X45 U5739 8.8 ZG	SCHRAUBE M 16X 2X45 U5739 8.8	TORNILLO M16X2X45 U5739 8.8Z
5	B00920516R	DADO M16X 1,5 D985 6S ZN	NUT M16X1,5 D985 6S ZN	ECROU	SELBSTSICHERNDE MUTTER M16-5S	TUERCA M16X 1,5 D985 6S
6	F01020566R	VITE M16X2X40 U5739 8.8ZN	SCR. M16X2X40 U5739 8.8ZN	VIS M16X2X40 U5739 8.8 ZN	SCHRAUBE M16X2X40 U5739 8.8 ZN	TORNILLO M16X2X40 U5739 8
7	B00920516R	DADO M16X 1,5 D985 6S ZN	NUT M16X1,5 D985 6S ZN	ECROU	SELBSTSICHERNDE MUTTER M16-5S	TUERCA M16X 1,5 D985 6S
8	B04221010R	INGRAS HYDR M10X1 90	GREASE NIPPLE	GRAISSEUR HYDRAULIQUE	SCHMIERNIPPEL M10X1 90	ENGRAS. HYDR M10X1 90
9	B03500172R	RULLO FOLLE	IDLE ROLLER	ROULEAU FOU	UMLENKWALZE	RODILLO LOCO
10	B03500214R	ALBERO LUNGO	LONG SHAFT	ARBRE LONG	LANGE WELLE	RBOL LARGO
11	B02040002R	CUSCINETTO 6307-2RS CAT.KST004	BEARING	ROULEMENT CAT.KST004	LAGER 6307-2RS	COJINETE 6307-2RS CAT.KST004
12	B01300623R	CHIUSURA RULLI FOLLI	IDLE ROLLER LOCK	FERMETURE ROULEAUX FOUX	UMLENKWALZENVERSCHLUSS	CIERRE DE RODILLOS LOCOS
13	F01020564R	VITE M16X2X35 U5739 8.8ZN	SCR. M16X2X35 U5739 8.8ZN	VIS M 16X35	SCHRAUBE M 16X35	TORNILLO M16X2X35 U5739 8
14	B01519319R	RALLA 16X38X5	FIFTH WHEEL	BUTEE	SCREIBE	RANGUA 16X38X5
15	B0C100022R	CARTER POST. CAPPELLO 220-265	CAP GUARD 265	CARTER EN ARRIERE CHAPEAU 220-	KAPPENABDECKUNG 265	C RTER POST. CAPUCH N 220-265
16	F01030208R	VITE M 8X1,25X 20 U7380 10.9ZN	SCREW M8X1,25X20 U7380 10.9ZN			TORNILLO M 8X1,25X 20 U7380 10
17	B0C100021R	CARTER INTERMEDIO	MIDDLE GUARD	CARTER INTERMEDIAIRE	MITTLERE ABDECKUNG	C RTER INTERMEDIO
18	B0C005258R	CARTER POSTERIORE PER DECAL	REAR GUARD FOR DECALS	CARTER EN ARRIERE POUR DECAL	CARTER HINTEN	C RTER TRASERO PARA DECAL
19	B0C100019R	CARTER BASSO	LOW GUARD	CARTER BAS	UNTERE ABDECKUNG	C RTER BAJO
20	B00471025R	VITE TTEI M10X 25-8.8 UNBRA	SCREW	VIS	SCHRAUBE TTEI M10X 25-8.8	TORNILLO CAB.ALLEN CON HUECO
21	F01230202R	DADO M10X 1,5 D985 8 ZN	NUT M10 D985	ECROU AUTOBL. M10	SELBSTSPERR.MUTTER M10	TUERCA M10X 1,5 D985 8
22	F01410062R	ROS.M10 10,5X 18X 2 U6592 ZN	WASHER M10 10,5X 18X 2 U6592	RONDELLE M10 10,5X18X2 ZN	DICHTUNGSRING M10 10,5X18X2 ZN	ARAND.M10 10,5X 18X 2 U6592 ZN
23	F01030208R	VITE M 8X1,25X 20 U7380 10.9ZN	SCREW M8X1,25X20 U7380 10.9ZN			TORNILLO M 8X1,25X 20 U7380 10
24	F01020564R	VITE M16X2X35 U5739 8.8ZN	SCR. M16X2X35 U5739 8.8ZN	VIS M 16X35	SCHRAUBE M 16X35	TORNILLO M16X2X35 U5739 8
25	B07S01608R	REGOLATORE RULLO	ROLLER ADJUSTER	REGLEUR ROULEAU	WALZENEINSTELLER	REGULADOR DEL RODILLO
26	F01200293R	DADO M12X1,75 U5588 CL8 ZN	NUT M12X1,75 U5588 6S ZN	ECROU M12X1,75 U5588 6S ZN	MUTTER M12X1,75 U5588 6S ZN	TUERCA M12X1,75 U5588 CL8 ZN
27	F01410076R	ROS.M12 13X 24X2,5 U6592 ZN	WASHER 12 13X 24X2,5 U6592 ZN	RONDEL. M12 13X24X2,5 U6592 ZN	SCHEIBE M12 13X24X2,5 U6592 ZN	ARAND.M12 13X 24X2,5 U6592 ZN
28	B07S00969R	GUIDACINGHIE POST.	REAR BELTS GUIDE	GUIDE-COURROIES POSTERIEUR	HINTERE GURTENFUEHRUNG	GU A DE LAS CORREAS POST.
29	F01020508R	VITE M12X1,75X25 U5739 8.8ZN	SCR. M12X1,75X25 U5739 8.8ZN	VIS M12X1,75X25 U5739 8.8 ZN	SCHRAUBE M12X1,75X25U57398.8ZN	TORNILLO M12X1,75X25 U5739
30	F01410076R	ROS.M12 13X 24X2,5 U6592 ZN	WASHER 12 13X 24X2,5 U6592 ZN	RONDEL. M12 13X24X2,5 U6592 ZN	SCHEIBE M12 13X24X2,5 U6592 ZN	ARAND.M12 13X 24X2,5 U6592 ZN
31	F01230213R	DADO M12X1,75 U7474 CL8 ZN	NUT M12X1,75 U7474 6SZN	ECROU AUTOBL. M12	SELBSTSPERR.MUTTER M12	TUERCA M12X1,75 U7474 CL8 ZN
32	B01300628R	SPINA GUIDACINGHIE	BELT GUIDE PIN	GOUPILLE GUIDE-COURROIES	GURTENFUEHRUNGSBOLZEN	CLAVIJA DE GU A DE LAS CORREAS
33	B01150430R	COPIGLIA 4X 30 U1336 ZN	GALV PIN	GOUPILLE GALV	SPLINT	PASADOR 4X 30 U1336 ZN
34	B07SP1457R	TELAIO INFERIORE PORTELLONE	LOWER REAR GATE FRAME			BASTIDOR INFER.DE LA PUERTA
35	F01020510R	VITE M12X1,75X30 U5739 8.8ZN	SCR. M12X1,75X30 U5739 8.8ZN	VIS M12X1,75X30 U5739 8.8ZN	SCHRAU.M12X1,75X30 U5739 8.8ZN	TORNILLO M12X1,75X30 U5739
36	F01410076R	ROS.M12 13X 24X2,5 U6592 ZN	WASHER 12 13X 24X2,5 U6592 ZN	RONDEL. M12 13X24X2,5 U6592 ZN	SCHEIBE M12 13X24X2,5 U6592 ZN	ARAND.M12 13X 24X2,5 U6592 ZN
37	F01230213R	DADO M12X1,75 U7474 CL8 ZN	NUT M12X1,75 U7474 6SZN	ECROU AUTOBL. M12	SELBSTSPERR.MUTTER M12	TUERCA M12X1,75 U7474 CL8 ZN
38	B00471270R	VITE ZN M12X70 10.9 ISO 7380	SCREW	VIS	SCHRAUBE TTEI M12X70-8.8	TORNILLO ZN M12X70 10.9 ISO 73
39	F01410076R	ROS.M12 13X 24X2,5 U6592 ZN	WASHER 12 13X 24X2,5 U6592 ZN	RONDEL. M12 13X24X2,5 U6592 ZN	SCHEIBE M12 13X24X2,5 U6592 ZN	ARAND.M12 13X 24X2,5 U6592 ZN
40	F01230213R	DADO M12X1,75 U7474 CL8 ZN	NUT M12X1,75 U7474 6SZN	ECROU AUTOBL. M12	SELBSTSPERR.MUTTER M12	TUERCA M12X1,75 U7474 CL8 ZN
41	B07S01023R	RASCHIATORE PORTELLONE	TAILGATE SCRAPER	RACLEUR POSTERIEUR	HECKKLAPPENABSTREIFER	RASCADOR DE LA PUERTA
42	F01020508R	VITE M12X1,75X25 U5739 8.8ZN	SCR. M12X1,75X25 U5739 8.8ZN	VIS M12X1,75X25 U5739 8.8 ZN	SCHRAUBE M12X1,75X25U57398.8ZN	TORNILLO M12X1,75X25 U5739
43	B01531844R	RALLA 13-25-6	FIFTH WHEEL	BUTEE	BEILAGSCHEIBE 13-25-6	RANGUA 13-25-6
44	B0C003205R	RINFORZO LAMA	BLADE STIFFENING BAR	RENFORT LAME	KLINGENVERSTEIFUNGSBLATT	REFUERZO DE CUCHILLA
45	B07U00023R	LAMA RASCH. FORNITURA PIENA	SCRAPER BLADE	LAME RACLEUR	ABSTREIFERBLATT	CUCHILLA RASCAD. TODO EL SUMI
46	B00470620R	VITE TTEI M 6X 20-8.8 UNBRA	SCREW	VIS	SCHRAUBE TTEI M6X20-10.9	TORNILLO CAB.ALLEN CON HUEC
47	F01230184R	DADO M6X1 D985 8ZN	NUT M6X1 D985 8ZN			TUERCA M6X1 D985 8
48	B01300628R	SPINA GUIDACINGHIE	BELT GUIDE PIN	GOUPILLE GUIDE-COURROIES	GURTENFUEHRUNGSBOLZEN	CLAVIJA DE GU A DE LAS CORREAS
49	B01150430R	COPIGLIA 4X 30 U1336 ZN	GALV PIN	GOUPILLE GALV	SPLINT	PASADOR 4X 30 U1336 ZN
50	B07S00959R	RULLO FOLLE PORTELLONE	TAIL GATE IDLE ROLLER	ROULEAU FOU PORTE EN ARRIERE	HECKKLAPPENUMLENKWALZE	RODILLO LOCO DE LA PUERTA
51	B03500237R	ALBERO CORTO	SHORT SHAFT	ARBRE COURT	KURZE WELLE	RBOL CORTO
52	B02040002R	CUSCINETTO 6307-2RS CAT.KST004	BEARING	ROULEMENT CAT.KST004	LAGER 6307-2RS	COJINETE 6307-2RS CAT.KST004
53	B01300523R	DISTANZIALE 35X 45X12,5	SPACER	ENTRETOISE	DISTANZSTUECK 35X45X12,5	DISTANCIADOR 35X 45X12,5
54	B01300590R	RALLA 20,5 128 10	FIFTH WHEEL	BUTEE	SCHEIBE 20,5 128 10	RANGUA 20,5 128 10
55	F01020605R	VITE M20X2,5X50 U5739 8.8ZN	SCR. M20X2,5X50 U5739 8.8ZN	VIS M 20X2,5X50	SCHRAUBE M 20X2,5X50	TORNILLO M20X2,5X50 U5739 8.8
56	B0C004148R	RALLA DI FERMO	LOCK WASHER	BUTEE D ARRET	ANSCHLAGPLATTE	RANGUA DE TOPE
57	B07S01554R	II BILANCIERE 265	II ROCKER	BALANCIER II 265	II. KIPPHEBEL	EL BALANC N 265

TAV_020

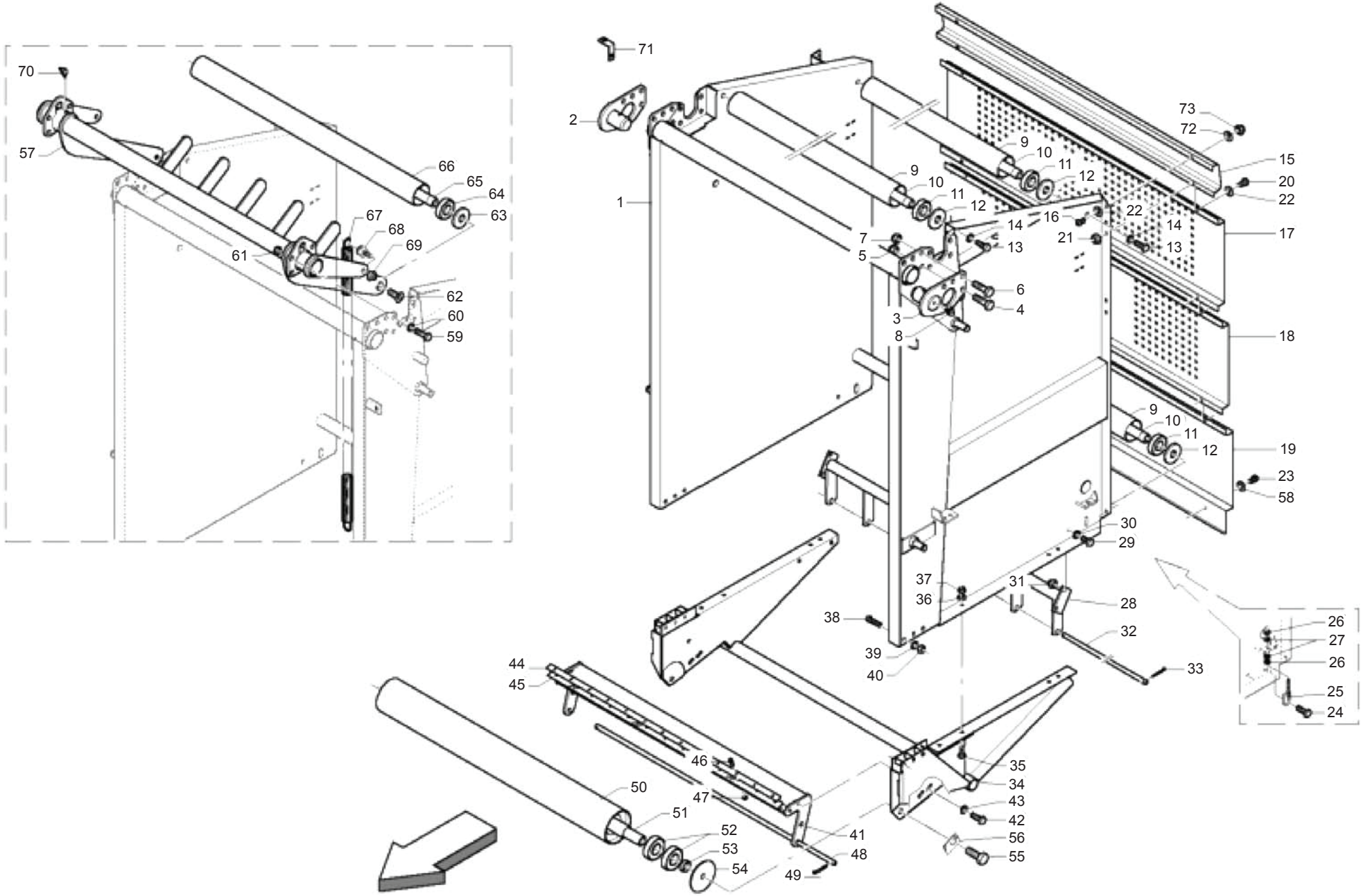

MASCHIO

cod. F07022338

PORTELLONE
REAR GATE

Pos.	Cod.	Descrizione	Description	Description	Benennung	Descripcion
58	F01420048R	ROS.M8 8,4X 24X 2 U6593 ZN	WASHER M8 8,4X 24X2 U6593 ZN	RONDELLE M8 8,4X24X 2 U6593 ZN	SCHEIBEN M8 8,4X24X 2 U6593 ZN	ARAND.M8 8,4X 24X 2 U6593 ZN
59	F01020252R	VITE M16X2X50 U5737 8.8ZN	SCR. M16X2X50 U5737 8.8 ZN	VIS M16X2X50 U5737 8.8 ZN	SCHRAUBE M16X2X50 U5737 8.8 ZN	TORNILLO M16X2X50 U5737 8.8Z
60	F01410100R	ROS.M16 17X 30X 3 U6592 ZN	WASHER M16 17X30X3 U6592 ZN	RONDELLE M16 17X30X3 ZN	SCHRAUBE M16 17X 30X3 U6592 ZN	ARAND.M16 17X 30X 3 U6592 ZN
61	B00920516R	DADO M16X 1,5 D985 6S ZN	NUT M16X1,5 D985 6S ZN	ECROU	SELBSTSICHERNDE MUTTER M16-5S	TUERCA M16X 1,5 D985 6S
62	F01030148R	VITE M16X2X35 U5933 10.9ZD	SCREW M16X2X35 U5933 10.9ZD	VIS M16X2X35 U5933 10.9ZD	SCHRAUBE M16X2X35 U5933 10.9ZD	TORNILLO M16X2X35 U5933 10.9ZD
63	B01300623R	CHIUSURA RULLI FOLLI	IDLE ROLLER LOCK	FERMETURE ROULEAUX FOUX	UMLENKWALZENVERSCHLUSS	CIERRE DE RODILLOS LOCOS
64	B02040002R	CUSCINETTO 6307-2RS CAT.KST004	BEARING	ROULEMENT CAT.KST004	LAGER 6307-2RS	COJINETE 6307-2RS CAT.KST004
65	B03500213R	ALBERO CORTO	SHORT SHAFT	ARBRE COURT	KURZE WELLE	RBOL CORTO
66	B03500165R	RULLO FOLLE	IDLE ROLLER	ROULEAU FOU	UMLENKWALZE	RODILLO LOCO
67	B01800037R	MOLLA II BILANCERE	II. BELTTENSIONER SPRING	RESSORT II BILANCIER	ZWEITER GURTENSPANNERFEDER	MUELLE II BALANC N
68	B01300937R	PERNO MOLLONE	SPRING BOLT	PIVOT	FEDERBOLZEN	PERNO MUELLE DISTANCIADOR
69	B00920516R	DADO M16X 1,5 D985 6S ZN	NUT M16X1,5 D985 6S ZN	ECROU	SELBSTSICHERNDE MUTTER M16-5S	TUERCA M16X 1,5 D985 6S
70	B04210610R	INGRAS HYDR A 45 M 6X1	GREASE NIPPLE	GRAISSEUR HYDRAULIQUE	SCHMIERNIPPEL M6X1 45	ENGRAS. HYDR A 45 M 6X1
71	B0C002357R	PIASTRINA ATTACCO CAVI	CABLE ATTACHMENT PLATE	PLAQUETTE ATTELAGE CABLES	KABELHALTERPLATTE	PLACA CONEXI N DE LOS CABLES
72	F01410051R	ROS.M8 8,4X 17X1,6 U6592 ZN	WASHER M8 8,4X17X1,6 U6592 ZN	RONDELLE M8 8,4X17X1,6 ZN	SCHEIBE M8 8,4X17X1,6 U6592 ZN	ARAND.M8 8,4X 17X1,6 U6592 ZN
73	B00920208R	DADO AUTOB.BASSO M 8-5S D985	NUT M8X1 D985 8ZN	ECROU	SELBSTSICHERNDE MUTTER M8-5S	TUERCA M8X1 D985 8

TAV_510

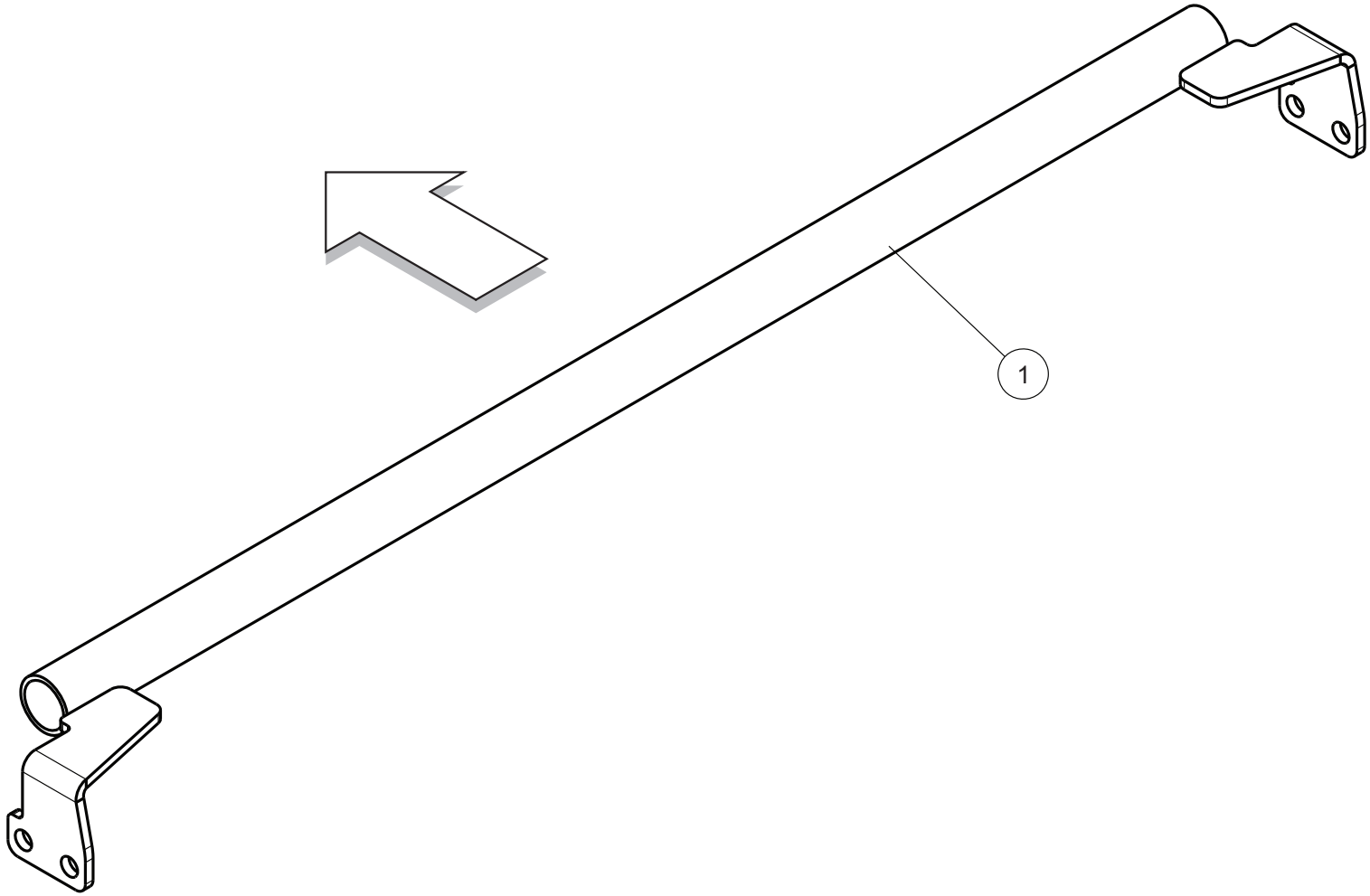

BLOCCO CINGHIE
BELTS LOCK

TAV_510

Pos.	Cod.	Descrizione	Description	Description	Benennung	Descripcion
1	B07S01901R	BLOCCO CINGHIE	BELT LOCK			BLOQUE DE CORREAS

TAV_025

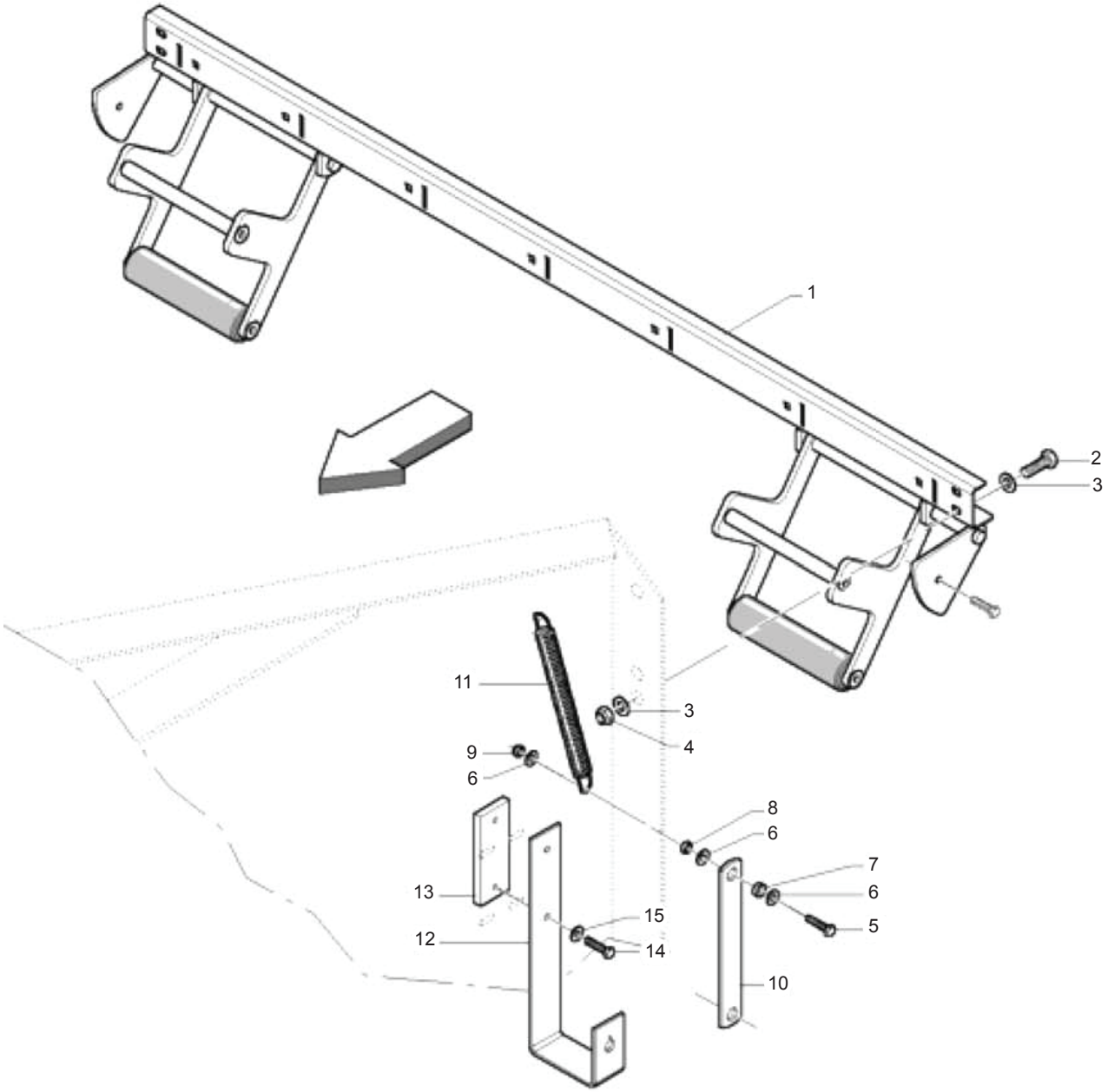
1
2
3
11
3
4
9
6
8
6
7
6
5
13
15
12
14
10

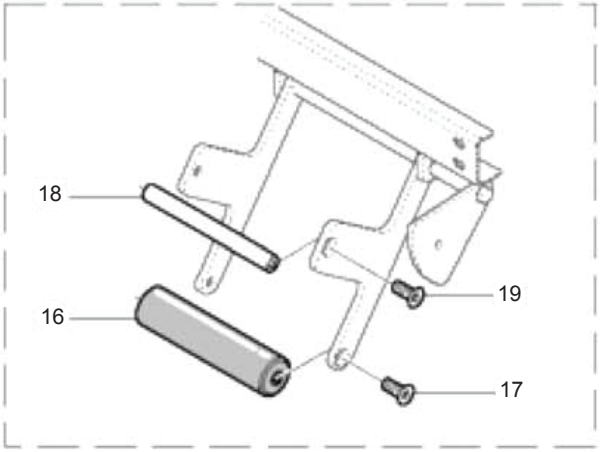
18
19
16
17

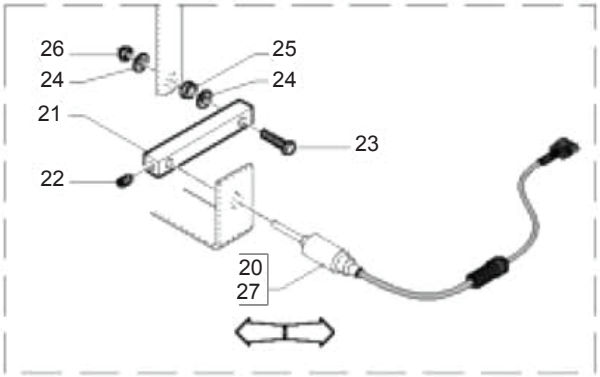
26
25
24
24
21
23
22
20
27

SEGNALATORI DI CARICAMENTO
LOADER INDICATORS

TAV_025

Pos.	Cod.	Descrizione	Description	Description	Benennung	Descripcion
1	B07S00951R	SEGNALATORI	INDICATORS	INDICATEURS	ANZEIGER	SE ALIZADORES
2	F01020472R	VITE M10X1,5X25 U5739 8.8ZN	SCR. M10X1,5X25 U5739 8.8ZN	VIS M10X1,5X25 U5739 8.8 ZN	SCHRAUBE M10X1,5X25 U5739 8.8	TORNILLO M10X1,5X25 U5739 8.8
3	F01410062R	ROS.M10 10,5X 18X 2 U6592 ZN	WASHER M10 10,5X 18X 2 U6592	RONDELLE M10 10,5X18X2 ZN	DICHTUNGSRING M10 10,5X18X2 ZN	ARAND.M10 10,5X 18X 2 U6592 ZN
4	F01230202R	DADO M10X 1,5 D985 8 ZN	NUT M10 D985	ECROU AUTOBL. M10	SELBSTSPERR.MUTTER M10	TUERCA M10X 1,5 D985 8
5	F01020413R	VITE M6X1X40 U5739 8.8ZN	SCR. M6X1X40 U5739 8.8ZN	VIS M 6X1X40	SCHRAUBE M 6X1X40	TORNILLO M6X1X40 U5739 8
6	F01420035R	ROS.M6 6,4X 18X1,6 U6593 ZN	WASHER D.6	RONDELLE D.6	KUPFERSCHEIBE D.6	ARAND.M6 6,4X 18X1,6 U6593
7	B01300866R	BOCCOLA DI MOVIMENTO	BUSH	DOUILLE	BUCHSE	CASQUILLO DE MOVIMIENTO
8	F01200232R	DADO M6X1 U5588 CL8 ZN	NUT M6X1 U5588 6.8ZN	ECROU 6 UNI 5588 6.8 ZN	MUTTER 6 UNI 5588 6.8 ZN	TUERCA M6X1 U5588 CL8 ZN
9	F01230184R	DADO M6X1 D985 8ZN	NUT M6X1 D985 8ZN			TUERCA M6X1 D985 8
10	B0C004227R	PIATTO SPOSTAMENTO SENSORE	SENSOR SHIFTING PLATE	PLAT COURSE SENSEUR	SENSORVERSCHIEBERPLATTE	PLATO DE DESPLAZAMIENTO DEL
11	B01810409R	MOLLA T FILO D.2,5 DP14,5 L210	SPRING	RESSORT	T- FEDER	MUELLE T HILO D.2,5 DP14,5 L21
12	B0C004231R	ATTACCO POTENZIOMETRO	POTENZIOMETER ATTACHMENT	ATTELAGE POTENTIOMETRE	SENSORANSCHLUSS	CONEXI N POTENCI METRO
13	B0C004008R	PIASTRINA FINECORSA	LIMIT SWITCH PLATE	PLAQUETTE FIN DE COURSE	ENDSCHALTERPLATTE	PLACA DE FINAL DE CARRERA
14	F01020380R	VITE M5X0,8X20 U5739 8.8ZN	SCR. M5X0,8X20 U5739 8.8ZN	VIS M5X0,8X20 U5739 8.8ZN	SCHRAUBE M5X0,8X20 U5739 8.8ZN	TORNILLO M5X0,8X20 U5739 8
15	F01420023R	ROS.M5 5,3X 15X1,5 U6593 ZN	WASHER M5 5,3X 15X1,5 U6593			ARAND.M5 5,3X 15X1,5 U6593
16	B07M00276R	RULLO SEGNALATORE	INDICATOR ROLLER	ROULEAU SIGNALEUR	ANZEIGEROLLE	RODILLO SE ALIZADOR
17	B00440820R	VITE TSPEI M 8X 20-10.9 UNI 5	SCREW	VIS	SCHRAUBE TSPEI M8X 20-10.9	TORNILLO CAB. AVE.ALLEN PAV M
18	B03500024R	COLLEGAMENTO	CONNECTION	CONNEXION	VERBINDUNG	CONEXI N
19	B00440820R	VITE TSPEI M 8X 20-10.9 UNI 5	SCREW	VIS	SCHRAUBE TSPEI M8X 20-10.9	TORNILLO CAB. AVE.ALLEN PAV M
20	B0E0P0028R	SENS.ANAL.CARICO CAMERA SX	SENSOR	SENSEUR	SENSOR LADUNGKAMMER LINKS	SENS.ANAL.CARGA C MARA IZQ
21	B0C004228R	PIATTIN0	PLATE	PETIT PLAT	PLATTE	PAT N
22	B00430610R	VITE STEI M 6X10-12.9 UNI 5	SCREW	VIS	SCHRAUBE STEI M6X10-12.9	TORNILLO SIN CAB. CON RAN.HEX
23	F01020408R	VITE M6X1X30 U5739 8.8ZN	SCR. M6X1X30 U5739 8.8ZN	VIS M 6X1X30	SCHRAUBE M 6X1X30	TORNILLO M6X1X30 U5739 8
24	F01420035R	ROS.M6 6,4X 18X1,6 U6593 ZN	WASHER D.6	RONDELLE D.6	KUPFERSCHEIBE D.6	ARAND.M6 6,4X 18X1,6 U6593
25	B01300866R	BOCCOLA DI MOVIMENTO	BUSH	DOUILLE	BUCHSE	CASQUILLO DE MOVIMIENTO
26	F01230184R	DADO M6X1 D985 8ZN	NUT M6X1 D985 8ZN			TUERCA M6X1 D985 8
27	B0E0P0029R	SENS.ANAL.CARICO CAMERA DX	PRESSURE SWITCH IFM PT3551	SENSEUR	SENSOR LADUNGKAMMER RECHTS	SENS.ANAL.CARGA C MARA DER

TAV_030

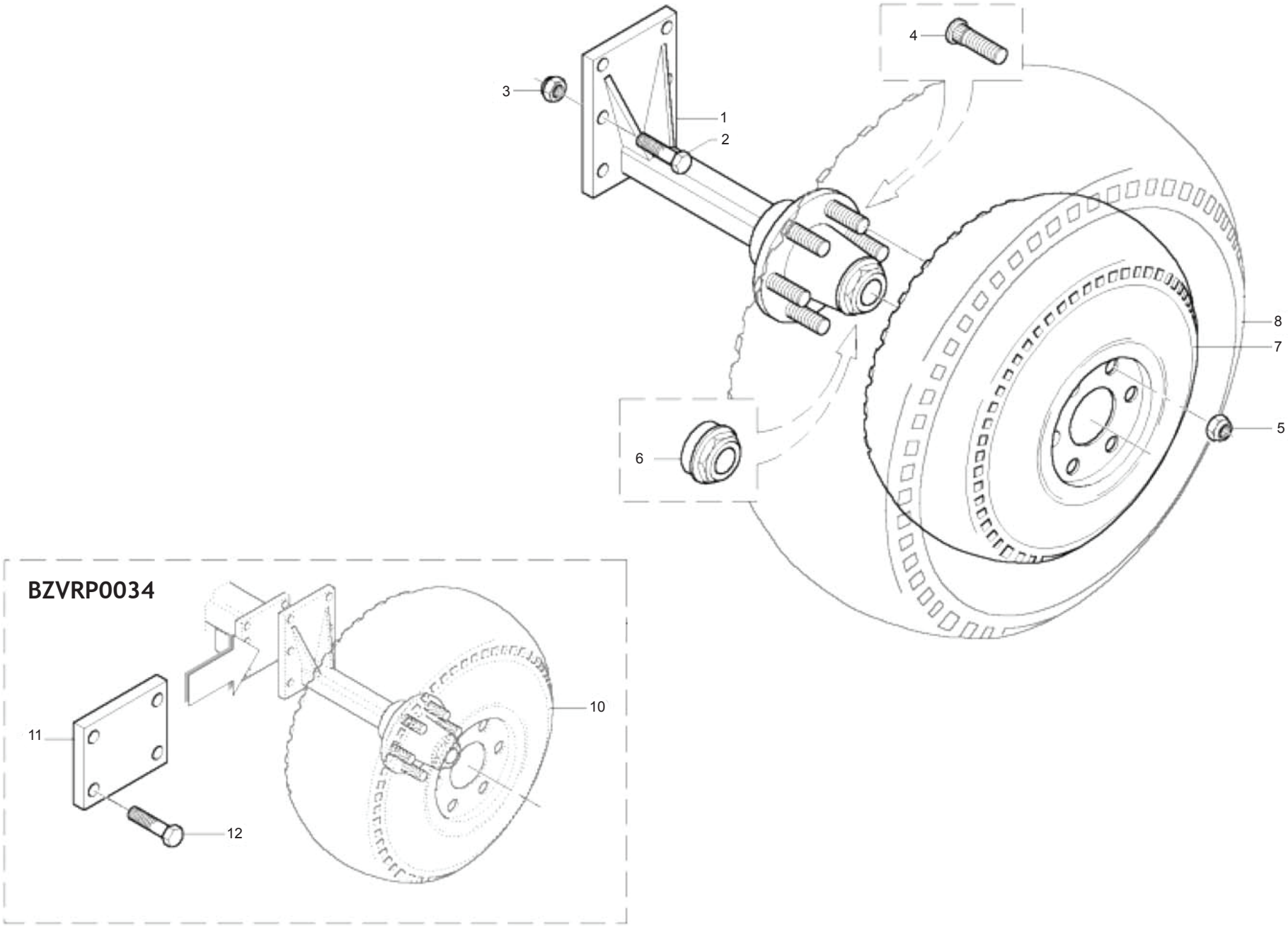

RUOTE
WHEELS

TAV_030

Pos.	Cod.	Descrizione	Description	Description	Benennung	Descripcion
1	B07100026R	MOZZO CON FUSELLO E PIASTRA	HUB WITH STUB AXLE	MOYEU AVEC AXE ET PLAQUE	NABE MIT ACHSSCHENKEL	BUJE CON PIVOTE Y PLACA
2	F01020309R	VITE M20X2,5X70 U5737 8.8ZN	SCR. M20X2,5X70 U5737 8.8ZN	VIS M20X2,5X70	SCHRAUBE M20X2,5X70	TORNILLO M20X2,5X70 U5737 8.8
3	F01230259R	DADO M20X 2,5 U7474 CL.8 ZN	NUT M20X 2,5 U7474 CL.8 ZN			TUERCA M20X 2,5 U7474 CL.8
4	B0R000273R	COLON.M18X1,5 FUSELLO 7100014	WHEEL STUD BOLT M18X1,5	COLONNETTE M18X1,5 FUSEE 7100	RADBOLZEN M18X1,5	COLUMN.M18X1,5 PIVOTE 7100014
5	B00821318R	DADO E SFERICO M18X1,5 ZINC.	NUT	ECROU	KUGELMUTTER M18X1,5	TUERCA Y ESF RICO M18X1,5 CINC
6	B07100050R	TAPPO PARAPOLVERE 80 NEUTRO	CAP	BOUCHON	PROPFEN	TAP N PARA-POLVO 80 NEUTRO
7	B07100022R	RUOTA CPLTA 400-15.5 6F P 14PR	COMPLETE WHEEL	ROUE 400-15.5	RAD KOMPLETT 400.15.5 6F P14PR	RUEDA CPLTA 400-15.5 6F P 14PR
8	B07100013R	RUOTA CPLTA 11,5 80-15,3 6F P	COMPLETE WHEEL 11,5 80-15,3	ROUE COMPLETE 11,5 80-15,3	KOMPLETTES RAD 11,5 80-15,3	RUEDA CPLTA 11,5 80-15,3 6F P
10	B07100041R	RUOTA CPLTA 19.0 45-176F P14PR	COMPLETE TYRE	ROUE COMPLETE	KOMPLETTES RAD 19,0 45-17	RUEDA CPLTA 19.0 45-176F P14PR
11	B0C003765R	PIASTRA DI SPESSORAMENTO	SHIM PLATE	PLAQUE	DICHTUNGSPLATTE	PLACA DE ESPESOR
12	F01020987R	VITE M20X2,5X90 U5737 8.8 ZN	GALV.SCR.M20X2,5X90 U5737 8.8			TORNILLO M20X2,5X90 U5737 8.8

TAV_035

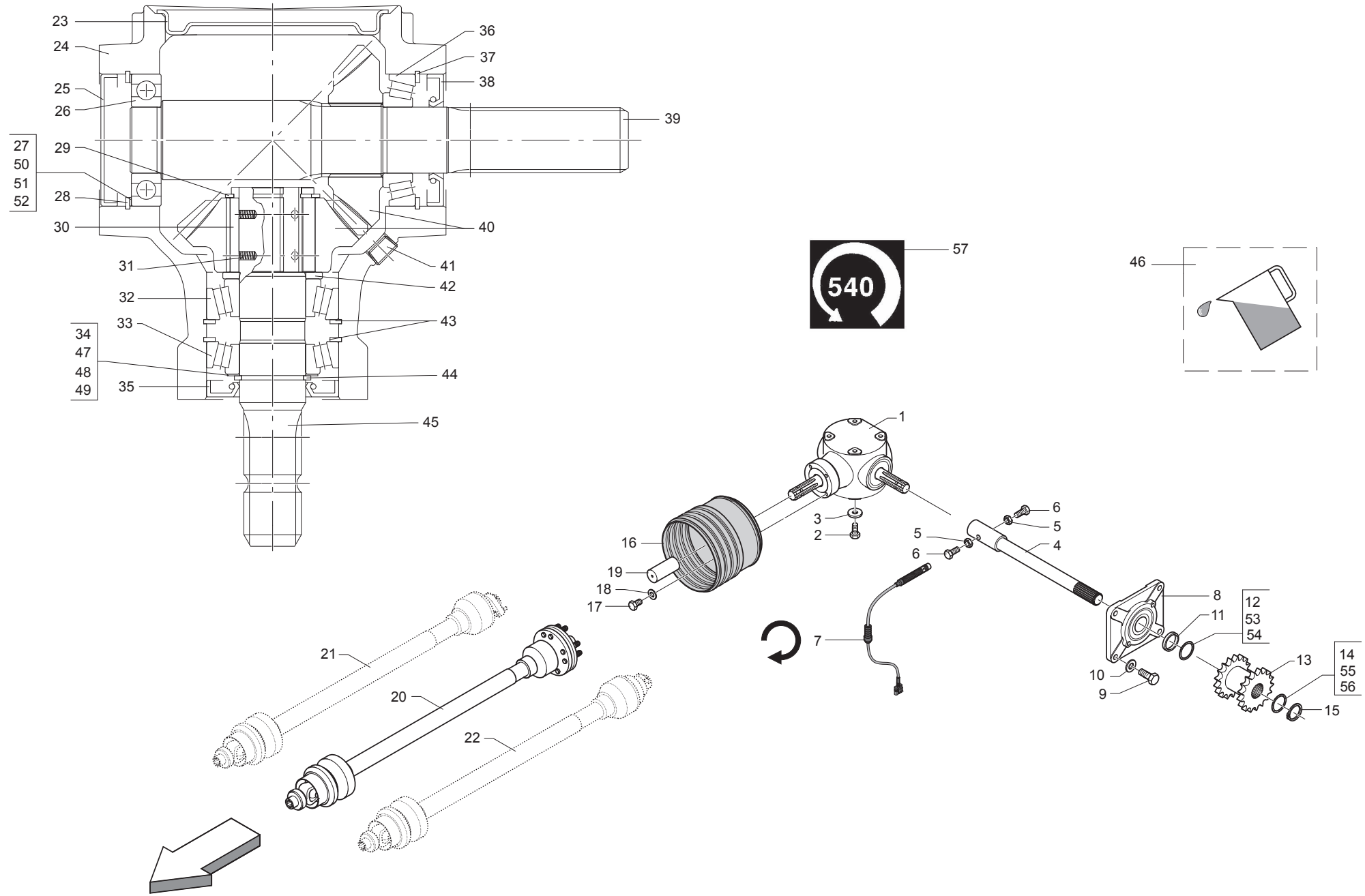

MASCHIO

SCATOLA DI TRASMISSIONE
GEAR BOX

TAV_035

Pos.	Cod.	Descrizione	Description	Description	Benennung	Descripcion
1	B03900177R	SCAT.BP 2050-1 1-RL-S ALB.	GEAR BOX	BOITE	GETRIEBE BYPY 2050	CAJ.BP 2050-1 1-RL-S RB.
2	F01020512R	VITE M12X1,75X35 U5739 8.8ZN	SCR. M12X1,75X35 U5739 8.8ZN	VIS M12X1,75X35 5739 8.8 ZN	SCHR. M12X1,75X35 5739 8.8 ZN	TORNILLO M12X1,75X35 U5739 8
3	B01516038R	RALLA 13 32 5	FIFTH WHEEL	BUTEE	SCHEIBE	RANGUA 13 32 5
4	B0R000304R	ALBERO PROLUNGA L=602	EXTENSION SHAFT L=602	ARBRE RALLONGE L=602	VERLAENGERUNGSWELLE L=602	RBOL PROLONGACI N L=602
5	F01200232R	DADO M6X1 U5588 CL8 ZN	NUT M6X1 U5588 6.8ZN	ECROU 6 UNI 5588 6.8 ZN	MUTTER 6 UNI 5588 6.8 ZN	TUERCA M6X1 U5588 CL8 ZN
6	F01020040R	VITE M6X1X40 U5737 8.8ZN	SCR. M6X1X40 U5737 8.8ZN	VIS M6X1X40 U5737 8.8ZN	SCHRAU. M6X1X40 U5737 8.8ZN	TORNILLO M6X1X40 U5737 8
7	B0E0P0013R	SENS DIG.SCATOLA E BILANCERE	DIGITAL SENSOR PROXIMITY M12	CAPTEUR DIGITAL AVEC PROXIMITY	SENSOR MIT PROXIMITY M 12	SENS DIG.CAJA Y BALANC N
8	B02700051R	SUPPORTO FLANGIATO	FLANGED SUPPORT	SUPPORT EMBOUTI	FLANSCHLAGER	SOPORTE CON BRIDA
9	F01020512R	VITE M12X1,75X35 U5739 8.8ZN	SCR. M12X1,75X35 U5739 8.8ZN	VIS M12X1,75X35 5739 8.8 ZN	SCHR. M12X1,75X35 5739 8.8 ZN	TORNILLO M12X1,75X35 U5739 8
10	F01410076R	ROS.M12 13X 24X2,5 U6592 ZN	WASHER 12 13X 24X2,5 U6592 ZN	RONDEL. M12 13X24X2,5 U6592 ZN	SCHEIBE M12 13X24X2,5 U6592 ZN	ARAND.M12 13X 24X2,5 U6592 ZN
11	B01329469R	DISTANZIALE 40X48X 7	SPACER	ENTRETOISE	DISTANZSTUECK 40X48X7	DISTANCIADOR 40X48X 7
12	B01300125R	SPES. 40 48 0,5 ZINCATO	SHIM GALV	ENTRETOISE GALV	DISTANZSTUECK 40 48 0,5	ESPES. 40 48 0,5 CINCADO
13	B03400224R	INGR.DOPPIO Z=12 12-1 SCATOLA	DOUBLE GEAR Z=12 12-1	ENGRENAGE DOUBLE	DOPPEL ZAHNRAD Z=12 12-1	ENGR.DOBLE Z=12 12-1 CAJA
14	B01300151R	SPES. 40 48 2 ZINCATO	SHIM	ENTRETOISE	DISTANZSTUECK 40 48 2	ESPES. 40 48 2 CINCADO
15	B01700040R	ANEL. D ARR. ALBERO 40-E UNI 3	SEEGER RING	BAGUE SEEGER	SEEGERRING 40-E	ANIL. DE PARAD. RBOL 40-E UNI
16	B07V00076R	CONTROCUFFIA CPLTA SFT 3950	COMPLETE COUNTER-HOUSING	CONTRE-BOL COMPLETE SFT-BYPY	GEGENHAUBE	CONTRA-CAPUCH N CPLTA SFT 395
17	F01020472R	VITE M10X1,5X25 U5739 8.8ZN	SCR. M10X1,5X25 U5739 8.8ZN	VIS M10X1,5X25 U5739 8.8 ZN	SCHRAUBE M10X1,5X25 U5739 8.8	TORNILLO M10X1,5X25 U5739 8.8
18	F01410062R	ROS.M10 10,5X 18X 2 U6592 ZN	WASHER M10 10,5X 18X 2 U6592	RONDELLE M10 10,5X18X2 ZN	DICHTUNGSRING M10 10,5X18X2 ZN	ARAND.M10 10,5X 18X 2 U6592 ZN
19	G19002131R	PROTEZIONE P.D.P.	PDP GUARD			PROTECCI N T.D.F.
20	B03600120R	CAR BO4 Z6-Z6 OMFRZ 1350 L1577	PTO BO4 Z6-Z6 OMFRZ 1350 L1577	CARDAN	GELENKWELLE T.BYPY654 OC F	CARD N BO4 Z6-Z6 OMFRZ 1350 L1
21	B03600049R	CAR BO7 Z6-Z6 OMBUL 2700 L1510	PTO BO7 Z6-Z6 OMBUL 2700 L1510	CARDAN TRACTEUR FF20-50	GELENKWELLE	C DIGO QUE NO SE DEBE USAR
22	B03600092R	CAR BO7 Z6-Z6 OMCAM 2500 L1589	PTO BO7 Z6-Z6 OMCAM 2500 L1589	CARDAN	TRAKTOR KARDAN BYPY656	CARD N BO7 Z6-Z6 OMBUL 2500 L1
23	B0R000255R	COPERCHIO SCATOLA D=130	BOX CAP	COUVERCLE BOITE D=130	GETRIEBEGEHAUSEDECKEL	TAPA PARA CAJA D=130
24	B0R000305R	CORPO SCATOLA 2050	BOX 2050			CUERPO DE LA CAJA 2050
25	B0R000090R	CAPPELLOTTO 80X10	SEAL 80X10	CAPOUCHON 80X10	KAPPE 80X10	CAPUCH N 80X10
26	B02004018R	CUSCINETTO 6208 CAT.A-ST004	BEARING	ROULEMENT 6208NCAT.A ST004	LAGER	COJINETE 6208 CAT.A-ST004
27	B0R000262R	ANELLO SPES. 69,3X79,7X0,2	SHIM RING 69,3X79,7X0,2	BAGUE EPAISSEUR 69,3X79,7X0,2	RING 69,3X79,7X0,2	ANILLO DE ESPES. 69,3X79,7X0,2
28	B0R000256R	ANELLO ELASTICO 80-I SP=2,5	ELASTIC RING 80-I SP=2,5	BAGUE RESSORT 80-I SP=2,5	ELASTISCHER RING	ANILLO EL STICO 80-I SP=2,5
29	B0R000298R	ANELLO ELASTICO 50-E SP=2,0	RETAINING RING 50-E SP=2,0	BAGUE RESSORT 50-E SP=0,8	RING EL. 50-E	ANILLO EL STICO 50--E ESP=2,0
30	B0R000307R	PIASTR. RL 29870	RL PLATE	PLAQUETTE RL	PLATTE RLL	PLACA RL 29870
31	B0R000089R	MOLLA CONF DA 08 PZ	SPRING	RESSORT	FEDER	MUELLE PAQUETE DE 08 UNIDADE
32	B02124024R	CUSC. 32208 CAT.A-ST004	BEARING	ROULEMENT	LAGER	COJIN. 32208 CAT.A-ST004
33	B02124019R	CUSC. 30208 CAT.A-ST004	BEARING	ROULEMENT	LAGER	COJIN. 30208 CAT.A-ST004
34	B0R000261R	ANELLO SPES. 40,2X54,8X0,1	SHIM RING 40,2X54,8X0,1	BAGUE EPAISSEUR 40,2X54,8X0,1	DISTANZRING 40,2X54,8X0,1	ANILLO DE ESPES. 40,2X54,8X0,1
35	F03010277R	ANELLO T.AS 40X 80X10 D3760NBR	OIL SEAL 40X80X10 NBR	BOURAGE 40X80X10 NBR	OELABDICHTUNG 40X80X10 NBR	ANILLO T.AS 40X 80X10 D3760NBR
36	B02124019R	CUSC. 30208 CAT.A-ST004	BEARING	ROULEMENT	LAGER	COJIN. 30208 CAT.A-ST004
37	B0R000256R	ANELLO ELASTICO 80-I SP=2,5	ELASTIC RING 80-I SP=2,5	BAGUE RESSORT 80-I SP=2,5	ELASTISCHER RING	ANILLO EL STICO 80-I SP=2,5
38	F03010277R	ANELLO T.AS 40X 80X10 D3760NBR	OIL SEAL 40X80X10 NBR	BOURAGE 40X80X10 NBR	OELABDICHTUNG 40X80X10 NBR	ANILLO T.AS 40X 80X10 D3760NBR
39	B0R000975R	ALBERO SCAT.EXTREME HT	BOX SHAFT FOR EXTREME HT	ARBRE BOITE EXTREME HT	WELLE	RBOL DE CAJA EXTREME HT
40	B0R000308R	COPPIA CONICA R=1 1	R=1 1 BEVEL GEAR PAIR	COUPLE CONIQUE R=1 1	ZAHNRADPAAR R=1 1	PAR C NICO R=1 1
41	B0R000175R	TAPPO 3 8 GAS-C DIN 906	PLUG	BOUCHON 3 8 GAS-C DIN 906	VERSCHLUSS DECKER 3 8 GAS-C	TAP N 3 8 GAS-C DIN 906
42	B0R000285R	DISTANZIALE	SPACER	ENTRETOISE	DISTANZSTUECK	DISTANCIADOR
43	B0R000256R	ANELLO ELASTICO 80-I SP=2,5	ELASTIC RING 80-I SP=2,5	BAGUE RESSORT 80-I SP=2,5	ELASTISCHER RING	ANILLO EL STICO 80-I SP=2,5
44	B0R000257R	ANELLO ELASTICO 40-E SP=2,5	ELASTIC RING 40-E SP=2,5	BAGUE RESSORT 40-E SP=2,5	ELASTISCHER RING	ANILLO EL STICO 40-I SP=2,5
45	B0R000306R	ALBERO ASSE Z R.L.	AXLE SHAFT Z R.L.	ARBRE AXE Z RL	ACHSWELLE Z R.L.	RBOL DEL EJE Z R.L.
46	F03260016R	OLIO AGIP BLASIA 150	OIL AGIP BLASIA 150			ACEITE AGIP BLASIA 150
47	B0R000260R	ANELLO SPES. 40,2X54,8X0,4	SHIM RING 40,2X54,8X0,4	BAGUE EPAISSEUR 40,2X54,8X0,4	DISTANZRING 40,2X54,8X0,4	ANILLO DE ESPES. 40,2X54,8X0,4
48	B0R000259R	ANELLO SPES. 40,2X54,8X0,3	SHIM RING 40,2X54,8X0,3	BAGUE EPAISSEUR 40,2X54,8X0,3	ELASTISCHER RING	ANILLO DE ESPES. 40,2X54,8X0,3
49	B0R000258R	ANELLO SPES. 40,2X54,8X0,2	SHIM RING 40,2X54,8X0,2	BAGUE EPAISSEUR 40,2X54,8X0,2	ELASTISCHER RING	ANILLO DE ESPES. 40,2X54,8X0,2
50	B0R000263R	ANELLO SPES. 69,3X79,7X0,3	SHIM RING 69,3X79,7X0,3	BAGUE EPAISSEUR 69,3X79,7X0,3	SCHEIBE 69,3X79,7X0,3	ANILLO DE ESPES. 69,3X79,7X0,3
51	B0R000264R	ANELLO SPES. 69,3X79,7X0,4	SHIM RING 69,3X79,7X0,4	BAGUE EPAISSEUR 69,3X79,7X0,4	DISTANZRING 69,3X79,7X0,4	ANILLO DE ESPES. 69,3X79,7X0,4
52	B0R000265R	ANEL SPES. 69,3X79,7X0,1 34006	SHIM RING 69,3X79,7X0,1 34006	BAGUE EPAISSEUR 69,3X79,7X0,1	RING 69,3X79,7X0,1	ANILL. ESPES. 69,3X79,7X0,1 34
53	B01300151R	SPES. 40 48 2 ZINCATO	SHIM	ENTRETOISE	DISTANZSTUECK 40 48 2	ESPES. 40 48 2 CINCADO
54	B01300126R	SPES. 40 48 1 ZINC.ST_013	SHIM	ENTRETOISE	DISTANZSTUECK 40 408 1	ESPES. 40 48 1 CINC.EST_013
55	B01300125R	SPES. 40 48 0,5 ZINCATO	SHIM GALV	ENTRETOISE GALV	DISTANZSTUECK 40 48 0,5	ESPES. 40 48 0,5 CINCADO
56	B01300126R	SPES. 40 48 1 ZINC.ST_013	SHIM	ENTRETOISE	DISTANZSTUECK 40 408 1	ESPES. 40 48 1 CINC.EST_013
57	B07500187R	ET 540 GIRI - RICC SX NORMA	DECAL 540RPM - LEFT BURR	DECAL 540 T H-SENS DE ROTATIO	AUFKLEBE 540 RPM	ET 540 REVOLUCIONES -SENTIDO

TAV_040

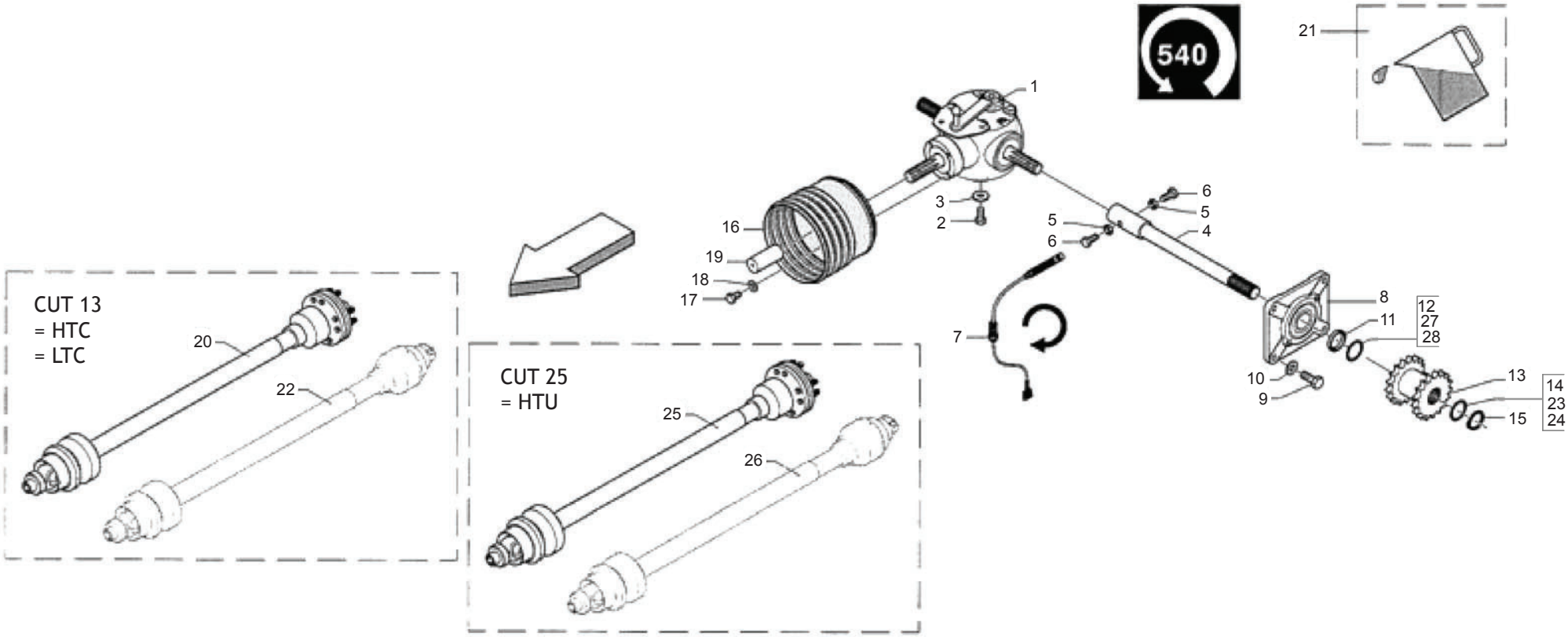
540
1
2
3
4
5
6
7
8
9
10
11
12
13
14
15
16
17
18
19
20
21
22
23
24
25
26
27
28
CUT 13
= HTC
= LTC
CUT 25
= HTU

SCATOLA DI TRASMISSIONE PTO
PTO GEAR BOX

TAV_040

Pos.	Cod.	Descrizione	Description	Description	Benennung	Descripcion
1	B03900179R	SCAT.BP 2070-1 1-RL-DIS S.ALB.	GEAR BOX	BOITE	GETRIEBE BYPY 2070	CAJ.BP 2070-1 1-RL-DIS S. RB.
2	F01020540R	VITE M14X2X30 U5739 8.8ZN	SCR. M14X2X30 U5739 8.8ZN	VIS M14X2X30 U5739 8.8ZN	SCHRAUBE M14X2X30 U5739 8.8ZN	TORNILLO M14X2X30 U5739 8.8ZN
3	B01516040R	RALLA 15 42 6	FIFTH WHEEL	BUTEE	SCHEIBE	RANGUA 15 42 6
4	B0R000304R	ALBERO PROLUNGA L=602	EXTENSION SHAFT L=602	ARBRE RALLONGE L=602	VERLAENGERUNGSWELLE L=602	RBOL PROLONGACI N L=602
5	F01200232R	DADO M6X1 U5588 CL8 ZN	NUT M6X1 U5588 6.8ZN	ECROU 6 UNI 5588 6.8 ZN	MUTTER 6 UNI 5588 6.8 ZN	TUERCA M6X1 U5588 CL8 ZN
6	B00180625R	VITE M6X1X 25 U5739 8.8ZN	SCREW	VIS	SCHRAUBE	TORNILLO M6X1X 25 U5739 8.8ZN
7	B0E0P0013R	SENS DIG.SCATOLA E BILANCERE	DIGITAL SENSOR PROXIMITY M12	CAPTEUR DIGITAL AVEC PROXIMITY	SENSOR MIT PROXIMITY M 12	SENS DIG.CAJA Y BALANC N
8	B02700051R	SUPPORTO FLANGIATO	FLANGED SUPPORT	SUPPORT EMBOUTI	FLANSCHLAGER	SOPORTE CON BRIDA
9	F01020512R	VITE M12X1,75X35 U5739 8.8ZN	SCR. M12X1,75X35 U5739 8.8ZN	VIS M12X1,75X35 5739 8.8 ZN	SCHR. M12X1,75X35 5739 8.8 ZN	TORNILLO M12X1,75X35 U5739 8
10	F01410076R	ROS.M12 13X 24X2,5 U6592 ZN	WASHER 12 13X 24X2,5 U6592 ZN	RONDEL. M12 13X24X2,5 U6592 ZN	SCHEIBE M12 13X24X2,5 U6592 ZN	ARAND.M12 13X 24X2,5 U6592 ZN
11	B01329469R	DISTANZIALE 40X48X 7	SPACER	ENTRETOISE	DISTANZSTUECK 40X48X7	DISTANCIADOR 40X48X 7
12	B01300126R	SPES. 40 48 1 ZINC.ST_013	SHIM	ENTRETOISE	DISTANZSTUECK 40 408 1	ESPES. 40 48 1 CINC.EST_013
13	B03400224R	INGR.DOPPIO Z=12 12-1 SCATOLA	DOUBLE GEAR Z=12 12-1	ENGRENAGE DOUBLE	DOPPEL ZAHNRAD Z=12 12-1	ENGR.DOBLE Z=12 12-1 CAJA
14	B01300125R	SPES. 40 48 0,5 ZINCATO	SHIM GALV	ENTRETOISE GALV	DISTANZSTUECK 40 48 0,5	ESPES. 40 48 0,5 CINCADO
15	B01700040R	ANEL. D ARR. ALBERO 40-E UNI 3	SEEGER RING	BAGUE SEEGER	SEEGERRING 40-E	ANIL. DE PARAD. RBOL 40-E UNI
16	B07V00076R	CONTROCUFFIA CPLTA SFT 3950	COMPLETE COUNTER-HOUSING	CONTRE-BOL COMPLETE SFT-BYPY	GEGENHAUBE	CONTRA-CAPUCH N CPLTA SFT 395
17	B00181015R	VITE M10X1,5 X 16 U5739 8.8ZN	SCREW	VIS	SCHRAUBE	TORNILLO M10X1,5 X 16 U5739 8
18	F01410062R	ROS.M10 10,5X 18X 2 U6592 ZN	WASHER M10 10,5X 18X 2 U6592	RONDELLE M10 10,5X18X2 ZN	DICHTUNGSRING M10 10,5X18X2 ZN	ARAND.M10 10,5X 18X 2 U6592 ZN
19	G19002131R	PROTEZIONE P.D.P.	PDP GUARD			PROTECCI N T.D.F.
20	B03600076R	CAR BO7 Z6-Z6 OMFRZ 1700 L1546	PTO BO7 Z6-Z6 OMFRZ 1700 L1546	CARDAN	GELENKWELLE	CARD N BO7 Z6-Z6 OMFRZ 1700 L1
21	F03260016R	OLIO AGIP BLASIA 150	OIL AGIP BLASIA 150			ACEITE AGIP BLASIA 150
22	B03600092R	CAR BO7 Z6-Z6 OMCAM 2500 L1589	PTO BO7 Z6-Z6 OMCAM 2500 L1589	CARDAN	TRAKTOR KARDAN BYPY656	CARD N BO7 Z6-Z6 OMBUL 2500 L1
23	B01300126R	SPES. 40 48 1 ZINC.ST_013	SHIM	ENTRETOISE	DISTANZSTUECK 40 408 1	ESPES. 40 48 1 CINC.EST_013
24	B01300151R	SPES. 40 48 2 ZINCATO	SHIM	ENTRETOISE	DISTANZSTUECK 40 48 2	ESPES. 40 48 2 CINCADO
25	B03600087R	CAR BO7 Z6-Z6 OMBUL 2900 L1510	PTO BO7 Z6-Z6 OMBUL 2900 L1510	CARDAN	GELENKWELLE	CARD N BO7 Z6-Z6 OMBUL 2900 L1
26	B03600093R	CAR BO7 Z6-Z6 OMCAM 2900 L1589	PTO BO7 Z6-Z6 OMCAM 2900 L1589	CARDAN	GELENKWELLE	CARD N BO7 Z6-Z6 OMBUL 2900 L1
27	B01300151R	SPES. 40 48 2 ZINCATO	SHIM	ENTRETOISE	DISTANZSTUECK 40 48 2	ESPES. 40 48 2 CINCADO
28	B01300125R	SPES. 40 48 0,5 ZINCATO	SHIM GALV	ENTRETOISE GALV	DISTANZSTUECK 40 48 0,5	ESPES. 40 48 0,5 CINCADO

TAV_045

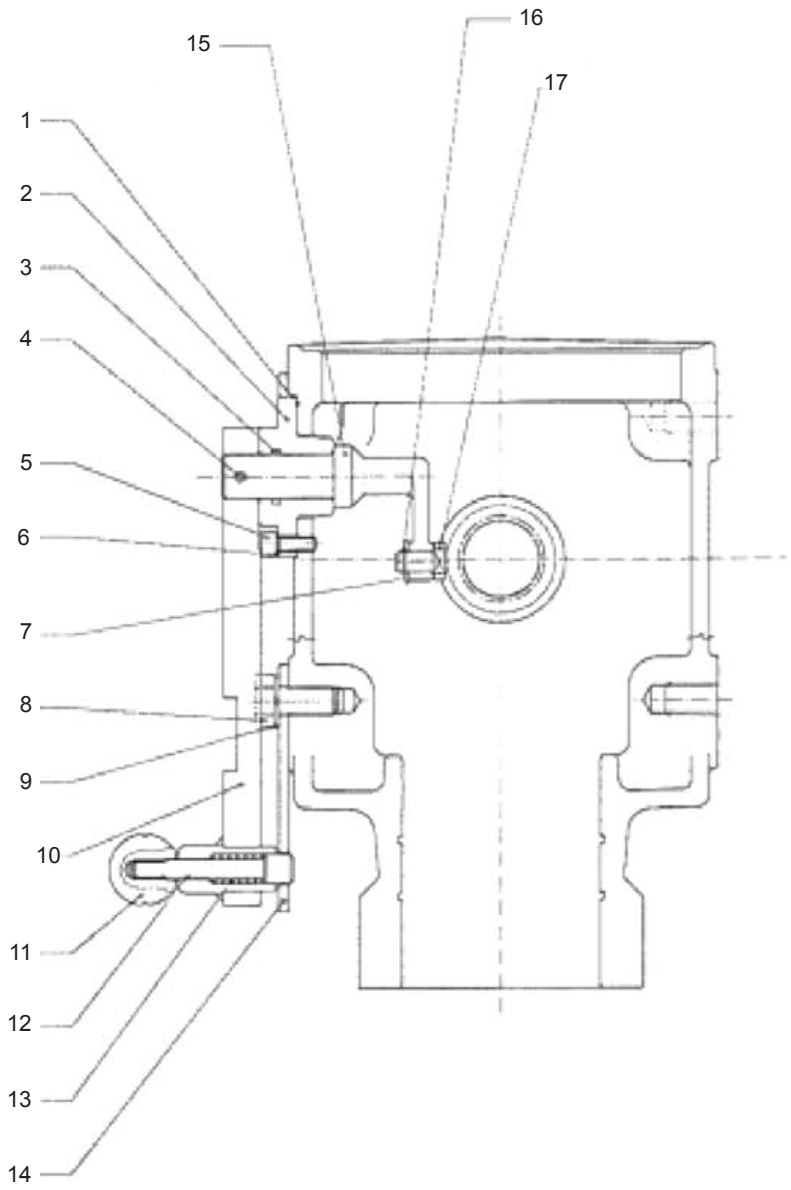
1
2
3
4
5
6
7
8
9
10
11
12
13
14
15
16
17

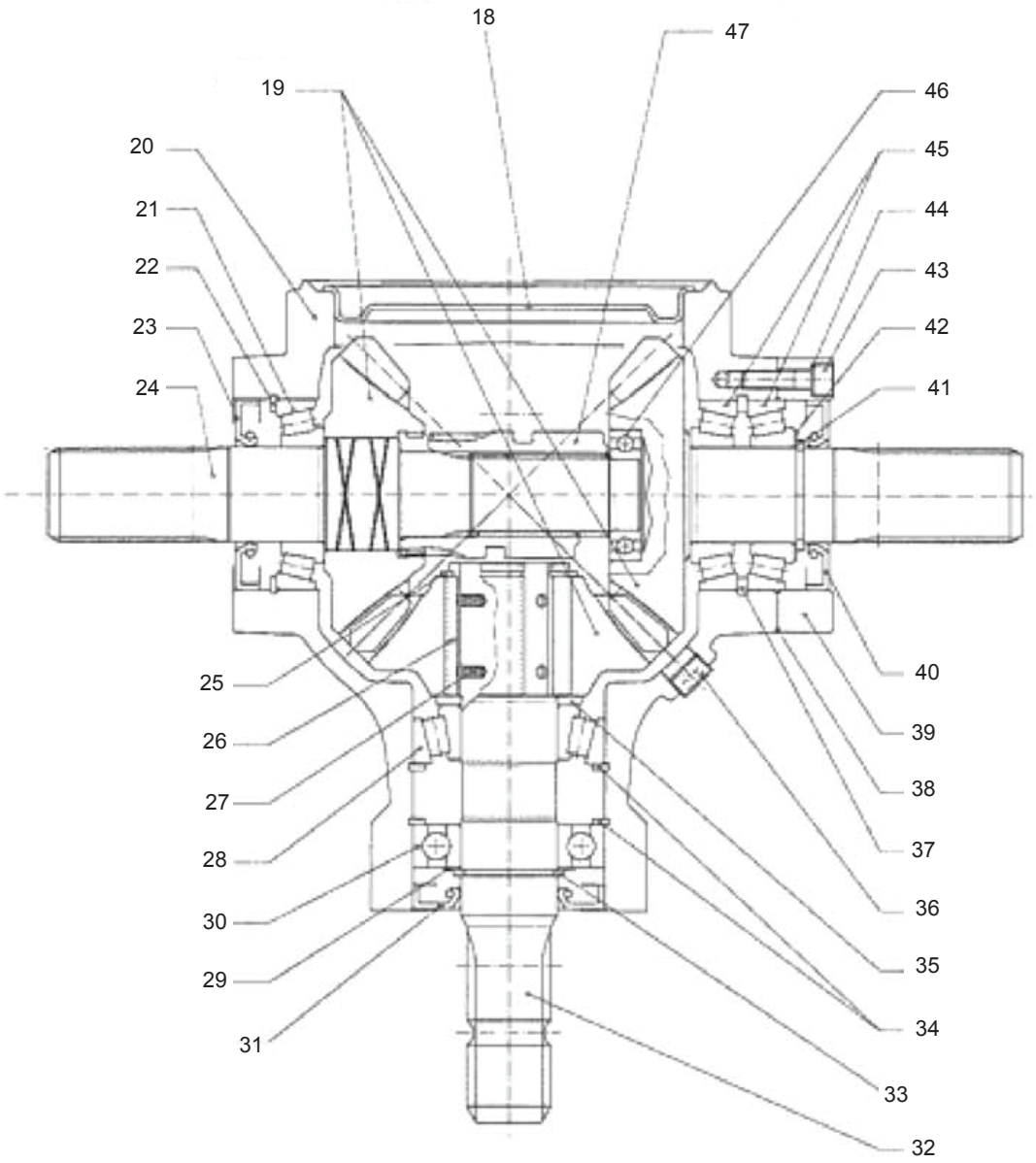
18
19
20
21
22
23
24
25
26
27
28
29
30
31
32
33
34
35
36
37
38
39
40
41
42
43
44
45
46
47

ESPLOSO SCATOLA DI TRASMISSIONE
GEAR BOX PARTS

TAV_045

Pos.	Cod.	Descrizione	Description	Description	Benennung	Descripcion
1	B0R000284R	GUARNIZIONE 35X65X0,2	PACKING 35X65X0,2	JOINT 35X65X0,2	DICHTUNG 35X65X0,2	JUNTA 35X65X0,2
2	B0R000283R	SUPP. LEVA	LEVER SUPPORT	SUPPORT LEVIER	HEBELTRAGER	SOP. PALANCA
3	B0R000300R	ANELLO TORICO OR 123	OR RING 123	BAGUE TORIQUE OR 123	OR RING 123	ANILLO T RICO OR 123
4	F02100090R	SPINA E.P. 5X 40 U6873 C70 BR	ELASTIC PIN 5X40	GOUJON ELASTIQUE 5X40	SPANNHUELSE 5X40	CLAVIJA EL.P. 5X 40 U6873 C70
5	B0R000292R	VITE TCEI M 6X 16-12.9	SCREW TCEI M 6X 16-12.9	VIS TCEI M 6X16-12.9	SCHRAUBE TCEI M6X16-12.9	TORNILLO CAB. ALLEN HUECO M 6
6	B0R000295R	RONDELLA SICUR.D=6 SCHNORR	LOCK WASHER D=6 SCHNORR	RONDELLE SECURETE D=6 SCHNORR	BEILAGSSCHEIBE D=6	ARANDELA DE SEGUR.D=6 SCHNO
7	B0R000293R	RONDELLA PIANA D=8 UNI6592	PLAIN WASHER D=8 UNI6592	RONDELLE PLANE D=8 UNI6592	BEILAGSSCHEIBE PLATTE D-8	ARANDELA PLANA D=8 UNI6592
8	F01020508R	VITE M12X1,75X25 U5739 8.8ZN	SCR. M12X1,75X25 U5739 8.8ZN	VIS M12X1,75X25 U5739 8.8 ZN	SCHRAUBE M12X1,75X25U57398.8ZN	TORNILLO M12X1,75X25 U5739
9	B0R000294R	RONDELLA ELAST.D=12 DIN128B	SPRING WASHER D=12 DIN128B	RONDELLE ELASTIQUE D=12 DIN128	ELASTICHER BEILAGSSCHEIBE D=12	ARANDELA EL ST.D=12 DIN128B
10	B0R001073R	LEVA EST. INVERTITORE	LEVER REVERSE EXTERNAL			PALANCA EXT. INVERSOR
11	B0R000302R	IMPUGNATURA A SFERA	BALL HANDLE	BRANCHE A SPHERE	KUGELGRIFF	EMPU ADURA DE BOLA
12	B0R001074R	PERNO SCATOLA 3900179	PIN			PERNO DE LA CAJA 3900179
13	B0R000301R	MOLLA DM 9,8X1,2X25	SPRING DM 9,81X1,2X25	RESSORT DM 9,8X1,2X25	FEDER DM9,8X1,2X25	MUELLE DM 9,8X1,2X25
14	B0R000281R	SELETTORE DISINNESTO	SELECTOR DISENGAGEMENT	SELECTEUR DEBRAYAGE	AUSLOSUNGSANWAHLER	SELECTOR DESACOPLAMIENTO
15	B0R000282R	LEVA COM. DISINNESTO	LEVER RELEASE	LEVIER COM. DEBRAYAGE	AUSLOSERHEBEL	PALANCA DE MANDO DESACOPLA
16	B0R000297R	ANELLO ELASTICO 8-E SP=0,8	RETAINING RING 8-E SP=0,8	BAGUE RESSORT 8-E SP=0,8	RING EL. 8-E	ANILLO EL STICO 8--E ESP=0,8
17	B0R000290R	PATTINO	SLIDING BLOCK	CALE	SCHUH	PAT N
18	B0R000288R	COPERCHIO D=145	COVER D=145	COUVERCLE D=145	DECKEL D=145	TAPA D=145
19	B0R000303R	TERNA CONICA R=1.1	BEVEL GEAR TRIAL R=1.1	TERNE CONIQUE R=1,1	TRIPPELZAHNRAD R=1.1	TRIS C NICO R=1.1
20	B0R000277R	SCATOLA 2070	BOX 2070			CAJA 2070
21	B02124019R	CUSC. 30208 CAT.A-ST004	BEARING	ROULEMENT	LAGER	COJIN. 30208 CAT.A-ST004
22	B0R000256R	ANELLO ELASTICO 80-I SP=2,5	ELASTIC RING 80-I SP=2,5	BAGUE RESSORT 80-I SP=2,5	ELASTISCHER RING	ANILLO EL STICO 80-I SP=2,5
23	F03010277R	ANELLO T.AS 40X 80X10 D3760NBR	OIL SEAL 40X80X10 NBR	BOURAGE 40X80X10 NBR	OELABDICHTUNG 40X80X10 NBR	ANILLO T.AS 40X 80X10 D3760NBR
24	B0R000279R	ALBERO ASSE XY	AXIS SHAFT	ARBRE AXE XY	ACHSWELLE	RBOL DEL EJE XY
25	B0R000298R	ANELLO ELASTICO 50-E SP=2,0	RETAINING RING 50-E SP=2,0	BAGUE RESSORT 50-E SP=0,8	RING EL. 50-E	ANILLO EL STICO 50--E ESP=2,0
26	B0R000289R	PIASTRINA RL	RL PLATE	PLAQUE RL	SCHEIBE RL	PLACA RL
27	B0R000089R	MOLLA CONF DA 08 PZ	SPRING	RESSORT	FEDER	MUELLE PAQUETE DE 08 UNIDADE
28	B02124024R	CUSC. 32208 CAT.A-ST004	BEARING	ROULEMENT	LAGER	COJIN. 32208 CAT.A-ST004
29	B02004018R	CUSCINETTO 6208 CAT.A-ST004	BEARING	ROULEMENT 6208NCAT.A ST004	LAGER	COJINETE 6208 CAT.A-ST004
30	B0R001071R	ANELLO SPESSORE 40,2X54,8X0,2	RING THICKNESS 40,2X54,8X0,2			ANILLO DE ESPESOR 40,2X54,8X0,
31	F03010277R	ANELLO T.AS 40X 80X10 D3760NBR	OIL SEAL 40X80X10 NBR	BOURAGE 40X80X10 NBR	OELABDICHTUNG 40X80X10 NBR	ANILLO T.AS 40X 80X10 D3760NBR
32	B0R000278R	ALBERO ASSE Z R.L.	AXIS SHAFT	ARBRE AXE Z R.L.	ACHSWELLE	RBOL DEL EJE Z R.L.
33	B0R000257R	ANELLO ELASTICO 40-E SP=2,5	ELASTIC RING 40-E SP=2,5	BAGUE RESSORT 40-E SP=2,5	ELASTISCHER RING	ANILLO EL STICO 40-I SP=2,5
34	B0R000256R	ANELLO ELASTICO 80-I SP=2,5	ELASTIC RING 80-I SP=2,5	BAGUE RESSORT 80-I SP=2,5	ELASTISCHER RING	ANILLO EL STICO 80-I SP=2,5
35	B0R000285R	DISTANZIALE	SPACER	ENTRETOISE	DISTANZSTUECK	DISTANCIADOR
36	B0R000175R	TAPPO 3 8 GAS-C DIN 906	PLUG	BOUCHON 3 8 GAS-C DIN 906	VERSCHLUSS DECKER 3 8 GAS-C	TAP N 3 8 GAS-C DIN 906
37	B0R000299R	ANELLO ELASTICO 80-I SP=4,0	RETAINING RING 80-I SP=4,0	BAGUE RESSORT 80-I SP=4,0	RING EL. 80-I	ANILLO EL STICO 80-I ESP=4,0
38	B0R000287R	GUARNIZIONE 80X115X0,3	PACKING 80X115X0,3	JOINT 80X115X0,3	DICHTUNG 80X115X0,3	JUNTA 80X115X0,3
39	B0R001070R	DISTANZIALE PORTA ANELLO	SPACER			DISTANCIADOR PORTA ANILLO
40	F03010277R	ANELLO T.AS 40X 80X10 D3760NBR	OIL SEAL 40X80X10 NBR	BOURAGE 40X80X10 NBR	OELABDICHTUNG 40X80X10 NBR	ANILLO T.AS 40X 80X10 D3760NBR
41	B0R000257R	ANELLO ELASTICO 40-E SP=2,5	ELASTIC RING 40-E SP=2,5	BAGUE RESSORT 40-E SP=2,5	ELASTISCHER RING	ANILLO EL STICO 40-I SP=2,5
42	B0R001071R	ANELLO SPESSORE 40,2X54,8X0,2	RING THICKNESS 40,2X54,8X0,2			ANILLO DE ESPESOR 40,2X54,8X0,
43	F01040097R	VITE M8X1,25X30 U5931 8.8ZN	SCR. M8X1,25X30 U5931 8.8ZN			TORNILLO M8X1,25X30 U5931 8.8
44	B0R000296R	RONDELLA SICUR.D=8 SCHNORR	LOCK WASHER D=8 SCHNORR	RONDELLE SECURETE D=8 SCHNORR	BEILAGSSCHEIBE D=8	ARANDELA DE SEGUR.D=8 SCHNO
45	B02124019R	CUSC. 30208 CAT.A-ST004	BEARING	ROULEMENT	LAGER	COJIN. 30208 CAT.A-ST004
46	B02003013R	CUSCINETTO 6006 CAT.B-ST004	BEARING	ROULEMENT	LAGER	COJINETE 6006 CAT.B-ST004
47	B0R000276R	MANICOTTO PER DISINNESTO	COUPLING FOR DISENGAGEMENT	MANCHON POUR DECLENCHEMENT	HUELSE FUER AUSKUPPLUNG	MANGUITO PARA DESACOPLE

TAV_350

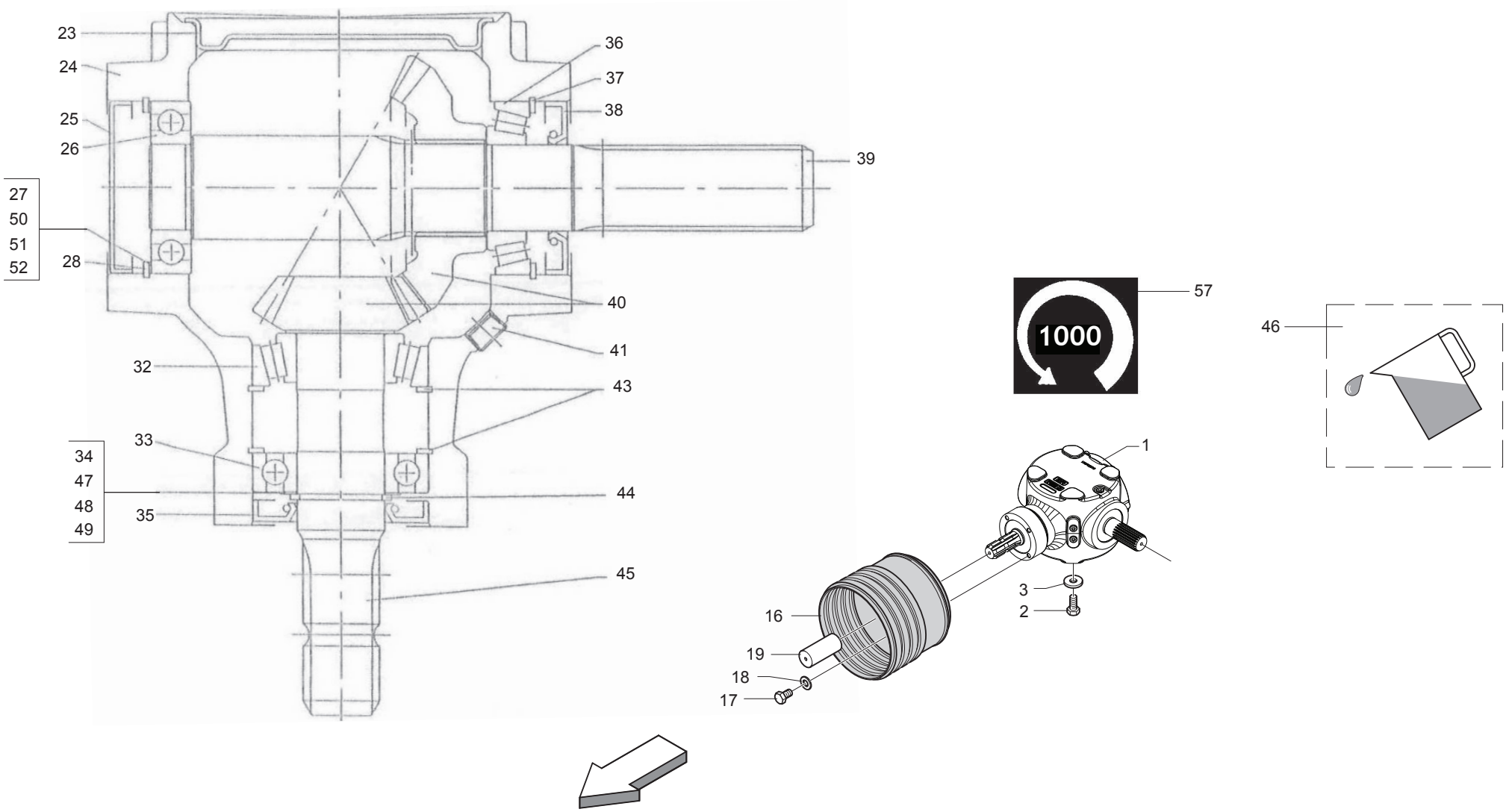
23
24
25
26
27
50
51
52
28
36
37
38
39
40
41
32
43
33
34
47
48
49
35
44
45
1000
57
46
1
3
2
16
19
18
17

SCATOLA DI TRASMISSIONE 1000 g/1'
GEAR BOX 1000 rpm

TAV_350

Pos.	Cod.	Descrizione	Description	Description	Benennung	Descripcion
1	B03900156R	SCATOLA BYPY 2070-1,92 1	GEAR BOX	BOITE	GETRIEBE BYPY 1000U MIN	CAJA BYPY 2070-1,92 1
2	F01020540R	VITE M14X2X30 U5739 8.8ZN	SCR. M14X2X30 U5739 8.8ZN	VIS M14X2X30 U5739 8.8ZN	SCHRAUBE M14X2X30 U5739 8.8ZN	TORNILLO M14X2X30 U5739 8.8ZN
3	B01516040R	RALLA 15 42 6	FIFTH WHEEL	BUTEE	SCHEIBE	RANGUA 15 42 6
16	B07V00076R	CONTROCUFFIA CPLTA SFT 3950	COMPLETE COUNTER-HOUSING	CONTRE-BOL COMPLETE SFT-BYPY	GEGENHAUBE	CONTRA-CAPUCH N CPLTA SFT 395
17	F01020468R	VITE M10X1,5X16 U5739 8.8ZN	SCR. M10X1,5X16 U5739 8.8ZN	RONDELLE M10X1,5 X 16	DUEBEL M10X1,5 X 16	TORNILLO M10X1,5X16 U5739 8
18	F01410064R	ROS.M10 10,5X 20X 2 U6592 ZN	WASHER M10 10,5X20X2 U6592 ZN	RONDEL. M10 10,5X20X2 U6592 ZN	SCHEIBE M10 10,5X20X2 U6592 ZN	ARAND.M10 10,5X 20X 2 U6592 ZN
19	G19002131R	PROTEZIONE P.D.P.	PDP GUARD			PROTECCI N T.D.F.
23	B0R000979R	COPERCHIO DI CHIUSURA SCATOLA	COPERCHIO DI CHIUSURA SCATOLA.			TAPA DE CIERRE DE LA CAJA
24	B0R000978R	CORPO SCATOLA 2070	BOX 2070			CUERPO DE LA CAJA 2070
25	B0R000090R	CAPPELLOTTO 80X10	SEAL 80X10	CAPOUCHON 80X10	KAPPE 80X10	CAPUCH N 80X10
26	B02004018R	CUSCINETTO 6208 CAT.A-ST004	BEARING	ROULEMENT 6208NCAT.A ST004	LAGER	COJINETE 6208 CAT.A-ST004
27	B0R000262R	ANELLO SPES. 69,3X79,7X0,2	SHIM RING 69,3X79,7X0,2	BAGUE EPAISSEUR 69,3X79,7X0,2	RING 69,3X79,7X0,2	ANILLO DE ESPES. 69,3X79,7X0,2
28	B0R000256R	ANELLO ELASTICO 80-I SP=2,5	ELASTIC RING 80-I SP=2,5	BAGUE RESSORT 80-I SP=2,5	ELASTISCHER RING	ANILLO EL STICO 80-I SP=2,5
32	B02124024R	CUSC. 32208 CAT.A-ST004	BEARING	ROULEMENT	LAGER	COJIN. 32208 CAT.A-ST004
33	B02004018R	CUSCINETTO 6208 CAT.A-ST004	BEARING	ROULEMENT 6208NCAT.A ST004	LAGER	COJINETE 6208 CAT.A-ST004
34	B0R000258R	ANELLO SPES. 40,2X54,8X0,2	SHIM RING 40,2X54,8X0,2	BAGUE EPAISSEUR 40,2X54,8X0,2	ELASTISCHER RING	ANILLO DE ESPES. 40,2X54,8X0,2
35	F03010277R	ANELLO T.AS 40X 80X10 D3760NBR	OIL SEAL 40X80X10 NBR	BOURAGE 40X80X10 NBR	OELABDICHTUNG 40X80X10 NBR	ANILLO T.AS 40X 80X10 D3760NBR
36	B02124019R	CUSC. 30208 CAT.A-ST004	BEARING	ROULEMENT	LAGER	COJIN. 30208 CAT.A-ST004
37	B0R000256R	ANELLO ELASTICO 80-I SP=2,5	ELASTIC RING 80-I SP=2,5	BAGUE RESSORT 80-I SP=2,5	ELASTISCHER RING	ANILLO EL STICO 80-I SP=2,5
38	F03010277R	ANELLO T.AS 40X 80X10 D3760NBR	OIL SEAL 40X80X10 NBR	BOURAGE 40X80X10 NBR	OELABDICHTUNG 40X80X10 NBR	ANILLO T.AS 40X 80X10 D3760NBR
39	B0R000977R	ALB. XY R 207040X36 DIN 5482	R XY SHAFT 2070 40X36 DIN548	ARBRE XY R 2070 40X36 DIN 54	WELLE	RB. XY R 207040X36 DIN 5482
40	B0R000976R	COPPIA CONICA R1.92 M6 X 2070	BEVEL GEAR PAIR R=1,92 M=6 FOR	COUPLE CONIQUE R=1.92 M=6	KEGELRADPAAR	PAR C NICO R1.92 M6 X 2070
41	B0R000175R	TAPPO 3 8 GAS-C DIN 906	PLUG	BOUCHON 3 8 GAS-C DIN 906	VERSCHLUSS DECKER 3 8 GAS-C	TAP N 3 8 GAS-C DIN 906
43	B0R000256R	ANELLO ELASTICO 80-I SP=2,5	ELASTIC RING 80-I SP=2,5	BAGUE RESSORT 80-I SP=2,5	ELASTISCHER RING	ANILLO EL STICO 80-I SP=2,5
44	B0R000257R	ANELLO ELASTICO 40-E SP=2,5	ELASTIC RING 40-E SP=2,5	BAGUE RESSORT 40-E SP=2,5	ELASTISCHER RING	ANILLO EL STICO 40-I SP=2,5
45	B0R000306R	ALBERO ASSE Z R.L.	AXLE SHAFT Z R.L.	ARBRE AXE Z RL	ACHSWELLE Z R.L.	RBOL DEL EJE Z R.L.
46	F03260016R	OLIO AGIP BLASIA 150	OIL AGIP BLASIA 150			ACEITE AGIP BLASIA 150
47	B0R000259R	ANELLO SPES. 40,2X54,8X0,3	SHIM RING 40,2X54,8X0,3	BAGUE EPAISSEUR 40,2X54,8X0,3	ELASTISCHER RING	ANILLO DE ESPES. 40,2X54,8X0,3
48	B0R000260R	ANELLO SPES. 40,2X54,8X0,4	SHIM RING 40,2X54,8X0,4	BAGUE EPAISSEUR 40,2X54,8X0,4	DISTANZRING 40,2X54,8X0,4	ANILLO DE ESPES. 40,2X54,8X0,4
49	B0R000261R	ANELLO SPES. 40,2X54,8X0,1	SHIM RING 40,2X54,8X0,1	BAGUE EPAISSEUR 40,2X54,8X0,1	DISTANZRING 40,2X54,8X0,1	ANILLO DE ESPES. 40,2X54,8X0,1
50	B0R000263R	ANELLO SPES. 69,3X79,7X0,3	SHIM RING 69,3X79,7X0,3	BAGUE EPAISSEUR 69,3X79,7X0,3	SCHEIBE 69,3X79,7X0,3	ANILLO DE ESPES. 69,3X79,7X0,3
51	B0R000264R	ANELLO SPES. 69,3X79,7X0,4	SHIM RING 69,3X79,7X0,4	BAGUE EPAISSEUR 69,3X79,7X0,4	DISTANZRING 69,3X79,7X0,4	ANILLO DE ESPES. 69,3X79,7X0,4
52	B0R000265R	ANEL SPES. 69,3X79,7X0,1 34006	SHIM RING 69,3X79,7X0,1 34006	BAGUE EPAISSEUR 69,3X79,7X0,1	RING 69,3X79,7X0,1	ANILL. ESPES. 69,3X79,7X0,1 34
57	B07500188R	ET 1000 GIRI - RICC SX NORM	DECAL 1000 RPM - LEFT BURR	DECAL 1000 T H-SENS DE ROTATI	AUFKLEBE 1000 RPM	ET 1000 REVOLUCIONES -SENTIDO

TAV_050

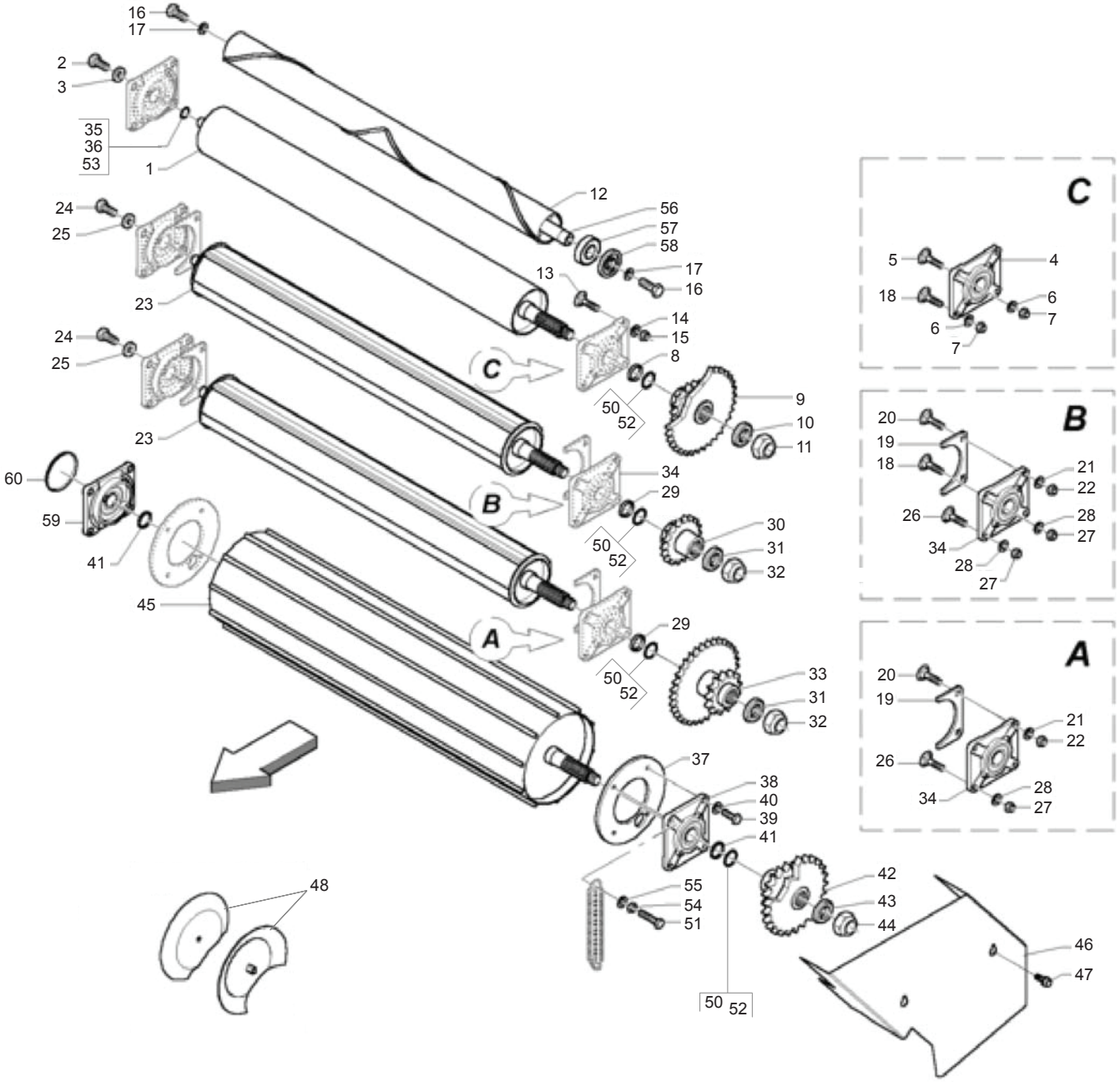

MASCHIO

RULLI
ROLLERS

TAV_050

Pos.	Cod.	Descrizione	Description	Description	Benennung	Descripcion
1	B07S00942R	RULLO MOT. INFERIORE NL	LOWER MOTOR ROLLER	ROULEAU MOTEUR INFERIEUR	UNTERE MOTORWALZE	RODILLO DEL MOT. INFERIOR NL
2	F01020564R	VITE M16X2X35 U5739 8.8ZN	SCR. M16X2X35 U5739 8.8ZN	VIS M 16X35	SCHRAUBE M 16X35	TORNILLO M16X2X35 U5739 8
3	B01515091R	RALLA 17 52 6	FIFTH WHEEL	BUTEE	SCHEIBE	RANGUA 17 52 6
4	B02700051R	SUPPORTO FLANGIATO	FLANGED SUPPORT	SUPPORT EMBOUTI	FLANSCHLAGER	SOPORTE CON BRIDA
5	B00523421R	VITE SPECIALE TTQST M12X35-8.8	SPECIAL SCREW	VIS SPCIALE	SCHRAUBE TTQST M12X 35-8.8	TORNILLO ESPECIAL TTQST M12X3
6	F01410076R	ROS.M12 13X 24X2,5 U6592 ZN	WASHER 12 13X 24X2,5 U6592 ZN	RONDEL. M12 13X24X2,5 U6592 ZN	SCHEIBE M12 13X24X2,5 U6592 ZN	ARAND.M12 13X 24X2,5 U6592 ZN
7	F01230213R	DADO M12X1,75 U7474 CL8 ZN	NUT M12X1,75 U7474 6SZN	ECROU AUTOBL. M12	SELBSTSPERR.MUTTER M12	TUERCA M12X1,75 U7474 CL8 ZN
8	B01300845R	DISTANZIALE 40X50X4	SPACER	ENTRETOISE	DISTANZSCHEIBE 40X50X4	DISTANCIADOR 40X50X4
9	B03400287R	INGR. Z=23 10; 1, 1; ISO 16B-1	SMOOTH ROLLER GEAR Z=23-10 1	ENGRANAGE	ZAHNRAD Z=23-10 1	ENGR. Z=23 10; 1, 1; ISO 16B-1
10	B014R3050R	ROSETTA 30 UNI 5714-69 E DEIDR	WASHER	RONDELLE	BEILAGSSCHEIBE	ARANDELA 30 UNI 5714-69 E DEID
11	F01230291R	DADO M30X2 D985 ZN	NUT M30X2 D985 ZN	ECROU AUTOB. M30X2 DIN 985 ZN	SELBSTSP. MU. M30X2 DIN 985 ZN	TUERCA M30X2 D985 ZN
12	B07SP0293R	RULLO PULITORE	CLEANER ROLLER	ROULEAU POLISSEUS	REININGUNGSWALZE	RODILLO LIMPIADOR
13	B00523395R	VITE SPECIALE TTQST M12X45-8.8	SPECIAL SCREW	VIS SPECIALE	SCHRAUBE TTQST M12X 45-8.8	TORNILLO ESPECIAL TTQST M12X4
14	F01410076R	ROS.M12 13X 24X2,5 U6592 ZN	WASHER 12 13X 24X2,5 U6592 ZN	RONDEL. M12 13X24X2,5 U6592 ZN	SCHEIBE M12 13X24X2,5 U6592 ZN	ARAND.M12 13X 24X2,5 U6592 ZN
15	F01230213R	DADO M12X1,75 U7474 CL8 ZN	NUT M12X1,75 U7474 6SZN	ECROU AUTOBL. M12	SELBSTSPERR.MUTTER M12	TUERCA M12X1,75 U7474 CL8 ZN
16	B00191680R	VITE M16X 2X 80 U5737 8.8ZN	SCREW	VIS	SCHRAUBE	TORNILLO M16X 2X 80 U5737 8
17	F01410100R	ROS.M16 17X 30X 3 U6592 ZN	WASHER M16 17X30X3 U6592 ZN	RONDELLE M16 17X30X3 ZN	SCHRAUBE M16 17X 30X3 U6592 ZN	ARAND.M16 17X 30X 3 U6592 ZN
18	B005C0002R	VITE TTQST 12X35-8.8 TORNITA	SCREW	VIS	SCHRAUBE	TORNILLO TTQST 12X35-8.8 TORN
19	B0C6P0003R	RIPARO RULLI ALETTATI	ROLLERS GUARD	PROTECTION ROULEAUX	SCHUETZ WALZEN	RESGUARDO RODILLOS CON ALET
20	B00523395R	VITE SPECIALE TTQST M12X45-8.8	SPECIAL SCREW	VIS SPECIALE	SCHRAUBE TTQST M12X 45-8.8	TORNILLO ESPECIAL TTQST M12X4
21	F01410076R	ROS.M12 13X 24X2,5 U6592 ZN	WASHER 12 13X 24X2,5 U6592 ZN	RONDEL. M12 13X24X2,5 U6592 ZN	SCHEIBE M12 13X24X2,5 U6592 ZN	ARAND.M12 13X 24X2,5 U6592 ZN
22	F01230213R	DADO M12X1,75 U7474 CL8 ZN	NUT M12X1,75 U7474 6SZN	ECROU AUTOBL. M12	SELBSTSPERR.MUTTER M12	TUERCA M12X1,75 U7474 CL8 ZN
23	B07SP0062R	RULLO LT	LT ROLLER	ROULEAU LT	WALZE LT	RODILLO LT
24	F01020564R	VITE M16X2X35 U5739 8.8ZN	SCR. M16X2X35 U5739 8.8ZN	VIS M 16X35	SCHRAUBE M 16X35	TORNILLO M16X2X35 U5739 8
25	B01515091R	RALLA 17 52 6	FIFTH WHEEL	BUTEE	SCHEIBE	RANGUA 17 52 6
26	B00523421R	VITE SPECIALE TTQST M12X35-8.8	SPECIAL SCREW	VIS SPCIALE	SCHRAUBE TTQST M12X 35-8.8	TORNILLO ESPECIAL TTQST M12X3
27	F01230213R	DADO M12X1,75 U7474 CL8 ZN	NUT M12X1,75 U7474 6SZN	ECROU AUTOBL. M12	SELBSTSPERR.MUTTER M12	TUERCA M12X1,75 U7474 CL8 ZN
28	F01410076R	ROS.M12 13X 24X2,5 U6592 ZN	WASHER 12 13X 24X2,5 U6592 ZN	RONDEL. M12 13X24X2,5 U6592 ZN	SCHEIBE M12 13X24X2,5 U6592 ZN	ARAND.M12 13X 24X2,5 U6592 ZN
29	B01300845R	DISTANZIALE 40X50X4	SPACER	ENTRETOISE	DISTANZSCHEIBE 40X50X4	DISTANCIADOR 40X50X4
30	B03400235R	INGRANAGGIO Z=11-1	GEAR Z=11-1	ENGRENAGE	ZAHNRAD Z=11-1	ENGRANAJE Z=11-1
31	B014R3050R	ROSETTA 30 UNI 5714-69 E DEIDR	WASHER	RONDELLE	BEILAGSSCHEIBE	ARANDELA 30 UNI 5714-69 E DEID
32	F01230291R	DADO M30X2 D985 ZN	NUT M30X2 D985 ZN	ECROU AUTOB. M30X2 DIN 985 ZN	SELBSTSP. MU. M30X2 DIN 985 ZN	TUERCA M30X2 D985 ZN
33	B034P0006R	INGR.RULLO BACC.INF.Z=23-12 1	LOWER GEAR ROLLER Z=23-12 1	ENGRANAGE ROULEAU INF. Z=23-12	ZAHNRAD	ENGR.RODILLO BACC.INF.Z=23-12
34	B02700051R	SUPPORTO FLANGIATO	FLANGED SUPPORT	SUPPORT EMBOUTI	FLANSCHLAGER	SOPORTE CON BRIDA
35	B01300151R	SPES. 40 48 2 ZINCATO	SHIM	ENTRETOISE	DISTANZSTUECK 40 48 2	ESPES. 40 48 2 CINCADO
36	B01300125R	SPES. 40 48 0,5 ZINCATO	SHIM GALV	ENTRETOISE GALV	DISTANZSTUECK 40 48 0,5	ESPES. 40 48 0,5 CINCADO
37	B0C003056R	PIASTRA INTERNA RULLO GRANDE	ROLLER INNER PLATE	TOLE INTERIEUR ROULEAU	WALZEN INNENSCHEIBE	PLACA INTERNA DE RODILLO GRAN
38	B02700106R	SUPP. FLANG. FILETTATO	THREADED FLANGED SUPPORT	SUPPORT FILETE	HALTER	SOP. CON BRIDA ROSCADO
39	F01020512R	VITE M12X1,75X35 U5739 8.8ZN	SCR. M12X1,75X35 U5739 8.8ZN	VIS M12X1,75X35 5739 8.8 ZN	SCHR. M12X1,75X35 5739 8.8 ZN	TORNILLO M12X1,75X35 U5739 8
40	F01410076R	ROS.M12 13X 24X2,5 U6592 ZN	WASHER 12 13X 24X2,5 U6592 ZN	RONDEL. M12 13X24X2,5 U6592 ZN	SCHEIBE M12 13X24X2,5 U6592 ZN	ARAND.M12 13X 24X2,5 U6592 ZN
41	B01300151R	SPES. 40 48 2 ZINCATO	SHIM	ENTRETOISE	DISTANZSTUECK 40 48 2	ESPES. 40 48 2 CINCADO
42	B03400290R	INGR.RULLO GRANDE Z=16-24 1	BIG ROLLER GEAR Z=16-24 1	ENGRANAGE	ZAHNRAD	ENGR.RODILLO GRANDE Z=16-24 1
43	B014R3050R	ROSETTA 30 UNI 5714-69 E DEIDR	WASHER	RONDELLE	BEILAGSSCHEIBE	ARANDELA 30 UNI 5714-69 E DEID
44	F01230291R	DADO M30X2 D985 ZN	NUT M30X2 D985 ZN	ECROU AUTOB. M30X2 DIN 985 ZN	SELBSTSP. MU. M30X2 DIN 985 ZN	TUERCA M30X2 D985 ZN
45	B07S01841R	RULLO GRANDE NEW	BIG ROLLER	ROUELAU GRAND NEW	GROSSE WALZE	RODILLO GRANDE NEW
46	B0C3P0001R	CARTER	GUARD	CARTER	CARTER	C RTER
47	B00370001R	VITE TE M 8X16 A SEZ.TRILOBATA	SCREW TRE M 8X16 SEZ TROUBLED	VIS	SCHRAUBE M 8X15	TORNILLO CHEX M 8X16 A SECC. T
48	B07S01845R	TAZZA RESTRINGIMENTO	CHAMBER TIGHTENING CUPS	TASSE DE RETRECISSEMENT NEW	KAMMERVERENGUNGSTASSEN	PLATILLO DE REDUCCI N
50	B01300126R	SPES. 40 48 1 ZINC.ST_013	SHIM	ENTRETOISE	DISTANZSTUECK 40 408 1	ESPES. 40 48 1 CINC.EST_013
51	B00471235R	VITE TTEI M12X 35-8.8 UNBRA	SCREW	VIS	SCHRAUBE TTEI M12X35-8.8	TORNILLO CAB.ALLEN CON HUECO
52	B01300126R	SPES. 40 48 1 ZINC.ST_013	SHIM	ENTRETOISE	DISTANZSTUECK 40 408 1	ESPES. 40 48 1 CINC.EST_013
53	B01300125R	SPES. 40 48 0,5 ZINCATO	SHIM GALV	ENTRETOISE GALV	DISTANZSTUECK 40 48 0,5	ESPES. 40 48 0,5 CINCADO
54	F01200293R	DADO M12X1,75 U5588 CL8 ZN	NUT M12X1,75 U5588 6S ZN	ECROU M12X1,75 U5588 6S ZN	MUTTER M12X1,75 U5588 6S ZN	TUERCA M12X1,75 U5588 CL8 ZN
55	F01410076R	ROS.M12 13X 24X2,5 U6592 ZN	WASHER 12 13X 24X2,5 U6592 ZN	RONDEL. M12 13X24X2,5 U6592 ZN	SCHEIBE M12 13X24X2,5 U6592 ZN	ARAND.M12 13X 24X2,5 U6592 ZN
56	B03500214R	ALBERO LUNGO	LONG SHAFT	ARBRE LONG	LANGE WELLE	RBOL LARGO
57	B02043517R	CUSC.. 6207-2RS CAT.B-ST004	BEARING	ROULEMENT	LAGER 6207-2RS	COJIN. 6207-2RS CAT.B-ST00
58	B013P0150R	CHIUSURA RULLI PULITORE	ROLLER LOCK	FERMETURE ROULEAUX	WALZEN VERSCHLUSS	CIERRE DE RODILLOS DEL LIMPIAD

TAV_050

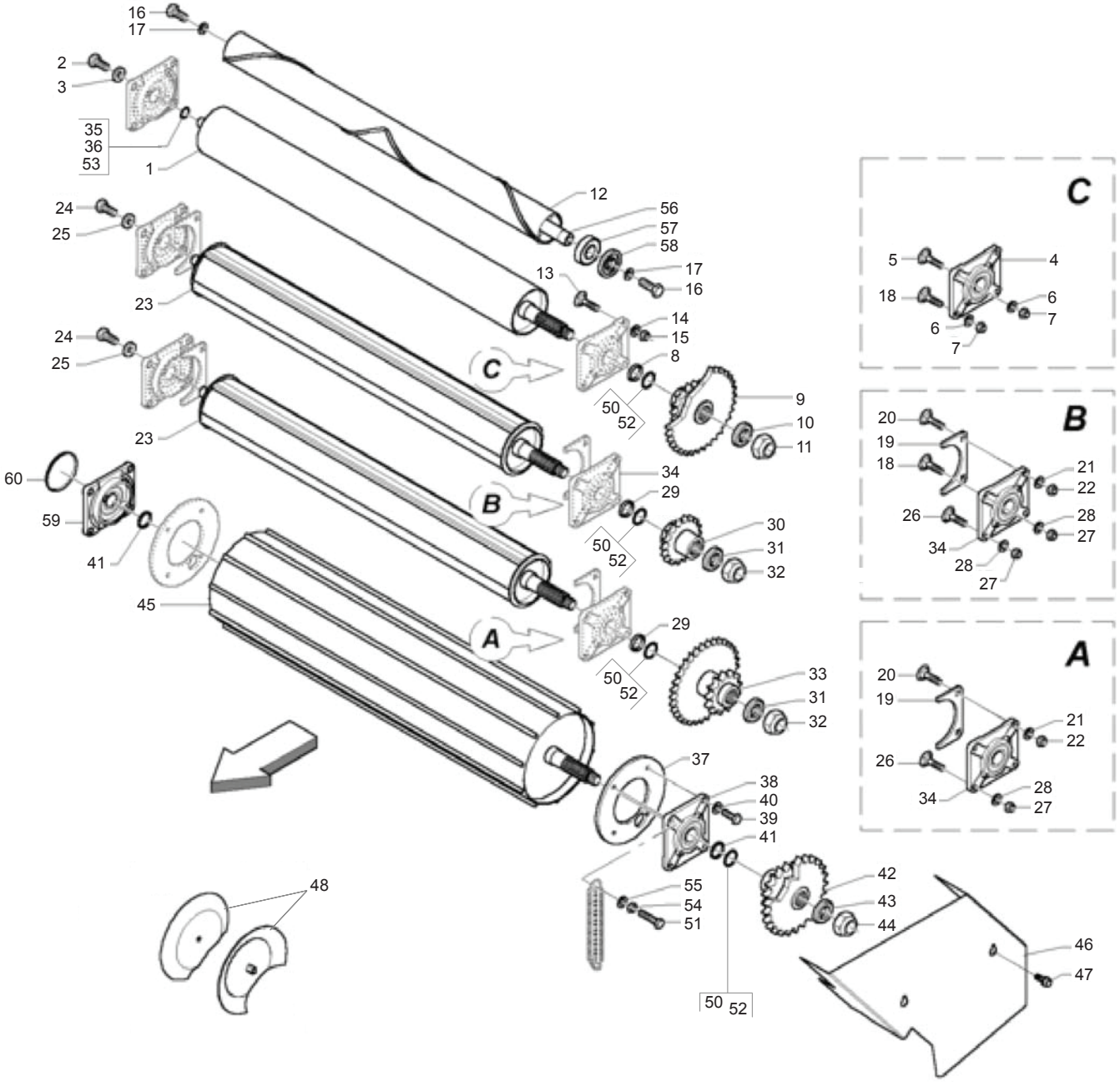

MASCHIO

cod. F07022338

RULLI
ROLLERS

Pos.	Cod.	Descrizione	Description	Description	Benennung	Descripcion
59	B02700153R	SUPPORTO FLANGIATO	FLANGED SUPPORT	SUPPORT POUR ROTOR CUT	FLANSCHLAGER	SOPORTE CON BRIDA
60	B04400001R	CAP. CHIUSO 110X10 TIPO C	CAP	COUVERCLE	GESCHLOSSENE KAPPE	CAP. CERRADO 110X10 TIPO C

TAV_055

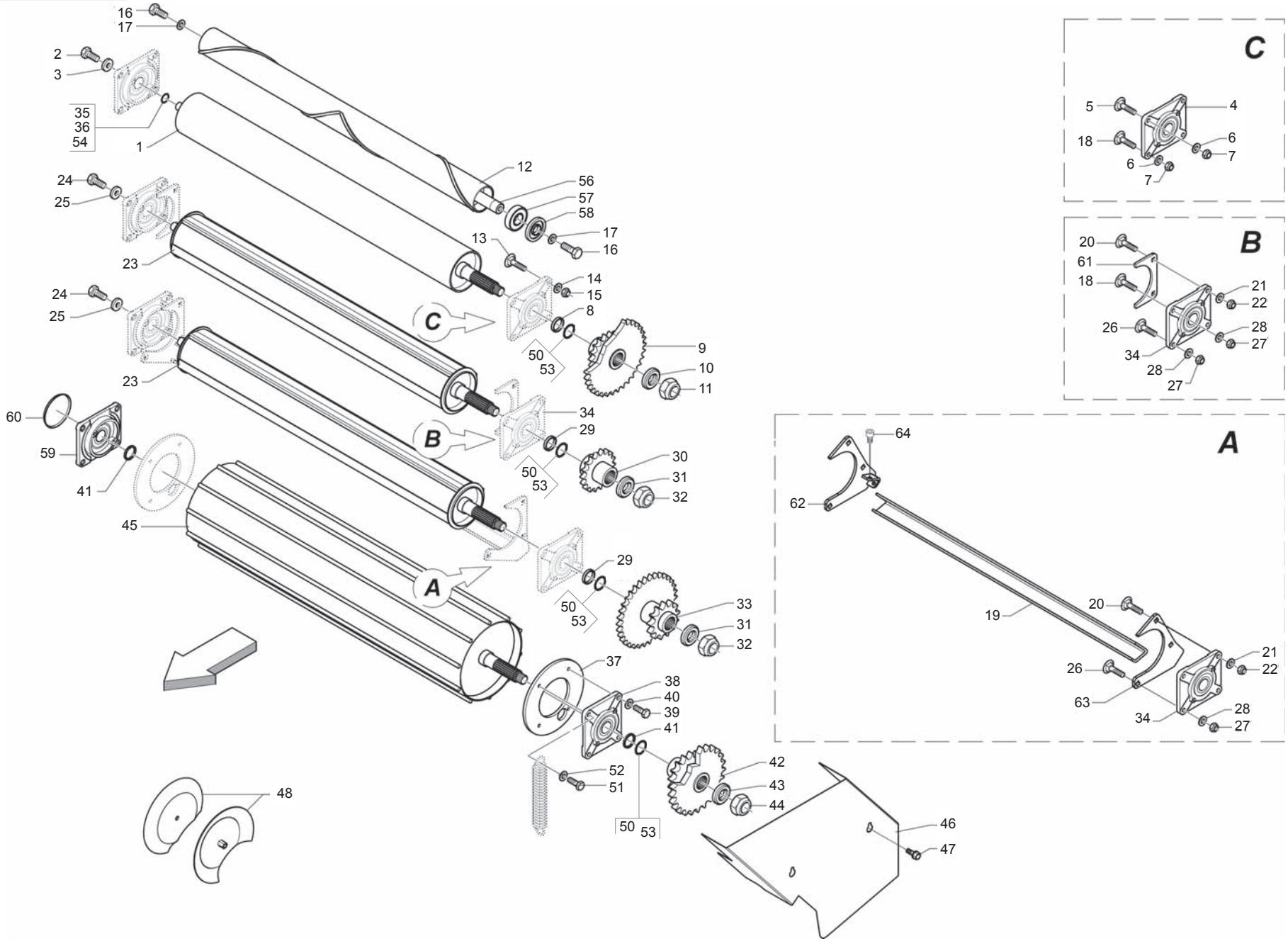

MASCHIO

cod. F07022338

RULLI CUT
ROLLERS CUT

TAV_055

Pos.	Cod.	Descrizione	Description	Description	Benennung	Descripcion
1	B07S00942R	RULLO MOT. INFERIORE NL	LOWER MOTOR ROLLER	ROULEAU MOTEUR INFERIEUR	UNTERE MOTORWALZE	RODILLO DEL MOT. INFERIOR NL
2	F01020564R	VITE M16X2X35 U5739 8.8ZN	SCR. M16X2X35 U5739 8.8ZN	VIS M 16X35	SCHRAUBE M 16X35	TORNILLO M16X2X35 U5739 8
3	B01515091R	RALLA 17 52 6	FIFTH WHEEL	BUTEE	SCHEIBE	RANGUA 17 52 6
4	B02700051R	SUPPORTO FLANGIATO	FLANGED SUPPORT	SUPPORT EMBOUTI	FLANSCHLAGER	SOPORTE CON BRIDA
5	B00523421R	VITE SPECIALE TTQST M12X35-8.8	SPECIAL SCREW	VIS SPCIALE	SCHRAUBE TTQST M12X 35-8.8	TORNILLO ESPECIAL TTQST M12X3
6	F01410076R	ROS.M12 13X 24X2,5 U6592 ZN	WASHER 12 13X 24X2,5 U6592 ZN	RONDEL. M12 13X24X2,5 U6592 ZN	SCHEIBE M12 13X24X2,5 U6592 ZN	ARAND.M12 13X 24X2,5 U6592 ZN
7	F01230213R	DADO M12X1,75 U7474 CL8 ZN	NUT M12X1,75 U7474 6SZN	ECROU AUTOBL. M12	SELBSTSPERR.MUTTER M12	TUERCA M12X1,75 U7474 CL8 ZN
8	B01300845R	DISTANZIALE 40X50X4	SPACER	ENTRETOISE	DISTANZSCHEIBE 40X50X4	DISTANCIADOR 40X50X4
9	B03400287R	INGR. Z=23 10; 1, 1; ISO 16B-1	SMOOTH ROLLER GEAR Z=23-10 1	ENGRANAGE	ZAHNRAD Z=23-10 1	ENGR. Z=23 10; 1, 1; ISO 16B-1
10	B014R3050R	ROSETTA 30 UNI 5714-69 E DEIDR	WASHER	RONDELLE	BEILAGSSCHEIBE	ARANDELA 30 UNI 5714-69 E DEID
11	F01230291R	DADO M30X2 D985 ZN	NUT M30X2 D985 ZN	ECROU AUTOB. M30X2 DIN 985 ZN	SELBSTSP. MU. M30X2 DIN 985 ZN	TUERCA M30X2 D985 ZN
12	B07SP0293R	RULLO PULITORE	CLEANER ROLLER	ROULEAU POLISSEUS	REININGUNGSWALZE	RODILLO LIMPIADOR
13	B00523395R	VITE SPECIALE TTQST M12X45-8.8	SPECIAL SCREW	VIS SPECIALE	SCHRAUBE TTQST M12X 45-8.8	TORNILLO ESPECIAL TTQST M12X4
14	F01410076R	ROS.M12 13X 24X2,5 U6592 ZN	WASHER 12 13X 24X2,5 U6592 ZN	RONDEL. M12 13X24X2,5 U6592 ZN	SCHEIBE M12 13X24X2,5 U6592 ZN	ARAND.M12 13X 24X2,5 U6592 ZN
15	F01230213R	DADO M12X1,75 U7474 CL8 ZN	NUT M12X1,75 U7474 6SZN	ECROU AUTOBL. M12	SELBSTSPERR.MUTTER M12	TUERCA M12X1,75 U7474 CL8 ZN
16	B00191680R	VITE M16X 2X 80 U5737 8.8ZN	SCREW	VIS	SCHRAUBE	TORNILLO M16X 2X 80 U5737 8
17	F01410100R	ROS.M16 17X 30X 3 U6592 ZN	WASHER M16 17X30X3 U6592 ZN	RONDELLE M16 17X30X3 ZN	SCHRAUBE M16 17X 30X3 U6592 ZN	ARAND.M16 17X 30X 3 U6592 ZN
18	B005C0002R	VITE TTQST 12X35-8.8 TORNITA	SCREW	VIS	SCHRAUBE	TORNILLO TTQST 12X35-8.8 TORN
19	B0C1P0218R	CORPO TRAVERSA	CROSSBAR FRAME			CUERPO DEL TRAVESA O
20	B00523395R	VITE SPECIALE TTQST M12X45-8.8	SPECIAL SCREW	VIS SPECIALE	SCHRAUBE TTQST M12X 45-8.8	TORNILLO ESPECIAL TTQST M12X4
21	F01410076R	ROS.M12 13X 24X2,5 U6592 ZN	WASHER 12 13X 24X2,5 U6592 ZN	RONDEL. M12 13X24X2,5 U6592 ZN	SCHEIBE M12 13X24X2,5 U6592 ZN	ARAND.M12 13X 24X2,5 U6592 ZN
22	F01230213R	DADO M12X1,75 U7474 CL8 ZN	NUT M12X1,75 U7474 6SZN	ECROU AUTOBL. M12	SELBSTSPERR.MUTTER M12	TUERCA M12X1,75 U7474 CL8 ZN
23	B07SP0062R	RULLO LT	LT ROLLER	ROULEAU LT	WALZE LT	RODILLO LT
24	F01020564R	VITE M16X2X35 U5739 8.8ZN	SCR. M16X2X35 U5739 8.8ZN	VIS M 16X35	SCHRAUBE M 16X35	TORNILLO M16X2X35 U5739 8
25	B01515091R	RALLA 17 52 6	FIFTH WHEEL	BUTEE	SCHEIBE	RANGUA 17 52 6
26	B00523421R	VITE SPECIALE TTQST M12X35-8.8	SPECIAL SCREW	VIS SPCIALE	SCHRAUBE TTQST M12X 35-8.8	TORNILLO ESPECIAL TTQST M12X3
27	F01230213R	DADO M12X1,75 U7474 CL8 ZN	NUT M12X1,75 U7474 6SZN	ECROU AUTOBL. M12	SELBSTSPERR.MUTTER M12	TUERCA M12X1,75 U7474 CL8 ZN
28	F01410076R	ROS.M12 13X 24X2,5 U6592 ZN	WASHER 12 13X 24X2,5 U6592 ZN	RONDEL. M12 13X24X2,5 U6592 ZN	SCHEIBE M12 13X24X2,5 U6592 ZN	ARAND.M12 13X 24X2,5 U6592 ZN
29	B01300845R	DISTANZIALE 40X50X4	SPACER	ENTRETOISE	DISTANZSCHEIBE 40X50X4	DISTANCIADOR 40X50X4
30	B03400235R	INGRANAGGIO Z=11-1	GEAR Z=11-1	ENGRENAGE	ZAHNRAD Z=11-1	ENGRANAJE Z=11-1
31	B014R3050R	ROSETTA 30 UNI 5714-69 E DEIDR	WASHER	RONDELLE	BEILAGSSCHEIBE	ARANDELA 30 UNI 5714-69 E DEID
32	F01230291R	DADO M30X2 D985 ZN	NUT M30X2 D985 ZN	ECROU AUTOB. M30X2 DIN 985 ZN	SELBSTSP. MU. M30X2 DIN 985 ZN	TUERCA M30X2 D985 ZN
33	B034P0006R	INGR.RULLO BACC.INF.Z=23-12 1	LOWER GEAR ROLLER Z=23-12 1	ENGRANAGE ROULEAU INF. Z=23-12	ZAHNRAD	ENGR.RODILLO BACC.INF.Z=23-12
34	B02700051R	SUPPORTO FLANGIATO	FLANGED SUPPORT	SUPPORT EMBOUTI	FLANSCHLAGER	SOPORTE CON BRIDA
35	B01300151R	SPES. 40 48 2 ZINCATO	SHIM	ENTRETOISE	DISTANZSTUECK 40 48 2	ESPES. 40 48 2 CINCADO
36	B01300126R	SPES. 40 48 1 ZINC.ST_013	SHIM	ENTRETOISE	DISTANZSTUECK 40 408 1	ESPES. 40 48 1 CINC.EST_013
37	B0C003056R	PIASTRA INTERNA RULLO GRANDE	ROLLER INNER PLATE	TOLE INTERIEUR ROULEAU	WALZEN INNENSCHEIBE	PLACA INTERNA DE RODILLO GRAN
38	B02700106R	SUPP. FLANG. FILETTATO	THREADED FLANGED SUPPORT	SUPPORT FILETE	HALTER	SOP. CON BRIDA ROSCADO
39	F01020512R	VITE M12X1,75X35 U5739 8.8ZN	SCR. M12X1,75X35 U5739 8.8ZN	VIS M12X1,75X35 5739 8.8 ZN	SCHR. M12X1,75X35 5739 8.8 ZN	TORNILLO M12X1,75X35 U5739 8
40	F01410076R	ROS.M12 13X 24X2,5 U6592 ZN	WASHER 12 13X 24X2,5 U6592 ZN	RONDEL. M12 13X24X2,5 U6592 ZN	SCHEIBE M12 13X24X2,5 U6592 ZN	ARAND.M12 13X 24X2,5 U6592 ZN
41	B01300151R	SPES. 40 48 2 ZINCATO	SHIM	ENTRETOISE	DISTANZSTUECK 40 48 2	ESPES. 40 48 2 CINCADO
42	B03400290R	INGR.RULLO GRANDE Z=16-24 1	BIG ROLLER GEAR Z=16-24 1	ENGRANAGE	ZAHNRAD	ENGR.RODILLO GRANDE Z=16-24 1
43	B014R3050R	ROSETTA 30 UNI 5714-69 E DEIDR	WASHER	RONDELLE	BEILAGSSCHEIBE	ARANDELA 30 UNI 5714-69 E DEID
44	F01230291R	DADO M30X2 D985 ZN	NUT M30X2 D985 ZN	ECROU AUTOB. M30X2 DIN 985 ZN	SELBSTSP. MU. M30X2 DIN 985 ZN	TUERCA M30X2 D985 ZN
45	B07S01841R	RULLO GRANDE NEW	BIG ROLLER	ROUELAU GRAND NEW	GROSSE WALZE	RODILLO GRANDE NEW
46	B0C3P0001R	CARTER	GUARD	CARTER	CARTER	C RTER
47	B00370001R	VITE TE M 8X16 A SEZ.TRILOBATA	SCREW TRE M 8X16 SEZ TROUBLED	VIS	SCHRAUBE M 8X15	TORNILLO CHEX M 8X16 A SECC. T
48	B07S01845R	TAZZA RESTRINGIMENTO	CHAMBER TIGHTENING CUPS	TASSE DE RETRECISSEMENT NEW	KAMMERVERENGUNGSTASSEN	PLATILLO DE REDUCCI N
50	B01300125R	SPES. 40 48 0,5 ZINCATO	SHIM GALV	ENTRETOISE GALV	DISTANZSTUECK 40 48 0,5	ESPES. 40 48 0,5 CINCADO
51	B00471235R	VITE TTEI M12X 35-8.8 UNBRA	SCREW	VIS	SCHRAUBE TTEI M12X35-8.8	TORNILLO CAB.ALLEN CON HUECO
52	F01420120R	ROS.M12 13X36X2,5 U6593 ZN	WASHER M12 13X36X2,5 U6593 ZN	RONDELLE M12 13X36X2,5 ZN		ARAND.M12 13X36X2,5 U6593 ZN
53	B01300126R	SPES. 40 48 1 ZINC.ST_013	SHIM	ENTRETOISE	DISTANZSTUECK 40 408 1	ESPES. 40 48 1 CINC.EST_013
54	B01300125R	SPES. 40 48 0,5 ZINCATO	SHIM GALV	ENTRETOISE GALV	DISTANZSTUECK 40 48 0,5	ESPES. 40 48 0,5 CINCADO
56	B03500214R	ALBERO LUNGO	LONG SHAFT	ARBRE LONG	LANGE WELLE	RBOL LARGO
57	B02043517R	CUSC.. 6207-2RS CAT.B-ST004	BEARING	ROULEMENT	LAGER 6207-2RS	COJIN. 6207-2RS CAT.B-ST00
58	B013P0150R	CHIUSURA RULLI PULITORE	ROLLER LOCK	FERMETURE ROULEAUX	WALZEN VERSCHLUSS	CIERRE DE RODILLOS DEL LIMPIAD
59	B02700153R	SUPPORTO FLANGIATO	FLANGED SUPPORT	SUPPORT POUR ROTOR CUT	FLANSCHLAGER	SOPORTE CON BRIDA

TAV_055

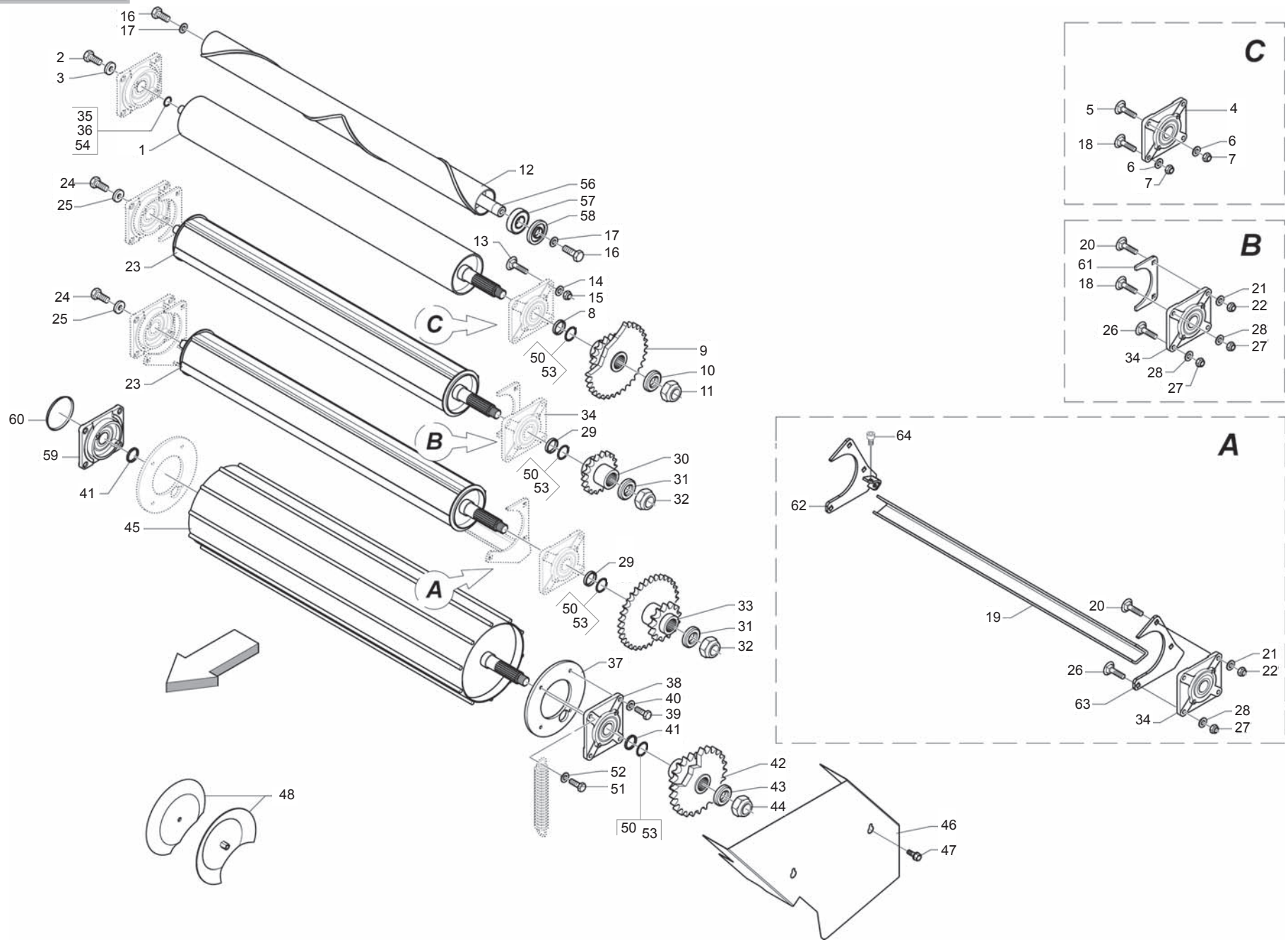

MASCHIO

cod. F07022338

RULLI CUT
ROLLERS CUT

TAV_055

Pos.	Cod.	Descrizione	Description	Description	Benennung	Descripcion
60	B04400001R	CAP. CHIUSO 110X10 TIPO C	CAP	COUVERCLE	GESCHLOSSENE KAPPE	CAP. CERRADO 110X10 TIPO C
61	B0C6P0003R	RIPARO RULLI ALETTATI	ROLLERS GUARD	PROTECTION ROULEAUX	SCHUETZ WALZEN	RESGUARDO RODILLOS CON ALET
62	B07SP0736R	ATTACCO LATERALE DX	RIGHT COUPLING			CONEXI N LATERAL DER
63	B07SP0735R	ATTACCO LATERALE SX	LEFT COUPLING			CONEXI N LATERAL IZQ.
64	B00471220R	VITE TTEI M12X 20-8.8 UNBRA	SCREW	VIS	SCHRAUBE TTEI M12X 20-8.8	TORNILLO CAB.ALLEN CON HUECO

TAV_060

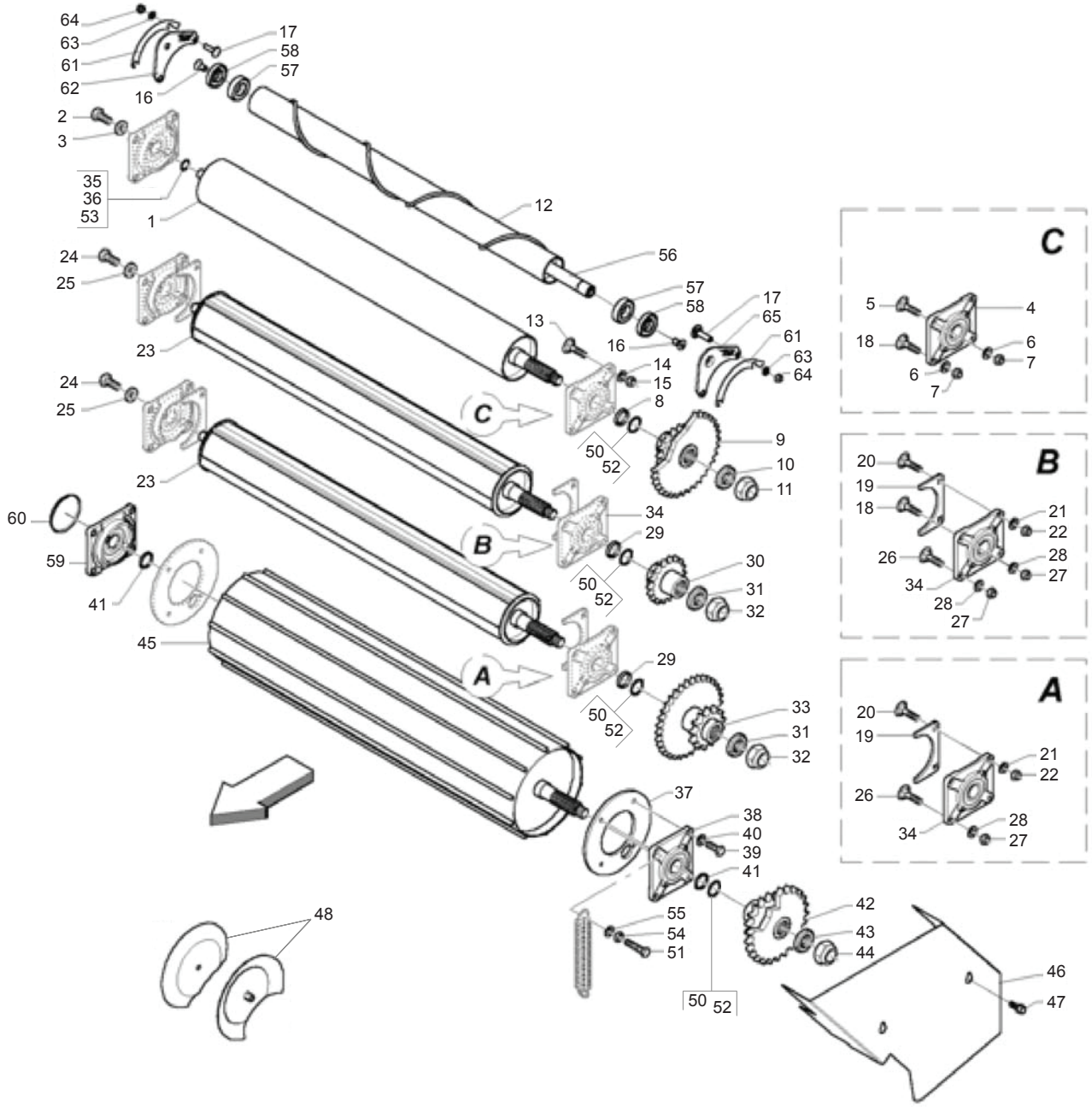

MASCHIO

cod. F07022338

RULLI "H20"
ROLLERS "H20"

TAV_060

Pos.	Cod.	Descrizione	Description	Description	Benennung	Descripcion
1	B07S00942R	RULLO MOT. INFERIORE NL	LOWER MOTOR ROLLER	ROULEAU MOTEUR INFERIEUR	UNTERE MOTORWALZE	RODILLO DEL MOT. INFERIOR NL
2	F01020564R	VITE M16X2X35 U5739 8.8ZN	SCR. M16X2X35 U5739 8.8ZN	VIS M 16X35	SCHRAUBE M 16X35	TORNILLO M16X2X35 U5739 8
3	B01515091R	RALLA 17 52 6	FIFTH WHEEL	BUTEE	SCHEIBE	RANGUA 17 52 6
4	B02700051R	SUPPORTO FLANGIATO	FLANGED SUPPORT	SUPPORT EMBOUTI	FLANSCHLAGER	SOPORTE CON BRIDA
5	B00523421R	VITE SPECIALE TTQST M12X35-8.8	SPECIAL SCREW	VIS SPCIALE	SCHRAUBE TTQST M12X 35-8.8	TORNILLO ESPECIAL TTQST M12X3
6	F01410076R	ROS.M12 13X 24X2,5 U6592 ZN	WASHER 12 13X 24X2,5 U6592 ZN	RONDEL. M12 13X24X2,5 U6592 ZN	SCHEIBE M12 13X24X2,5 U6592 ZN	ARAND.M12 13X 24X2,5 U6592 ZN
7	F01230213R	DADO M12X1,75 U7474 CL8 ZN	NUT M12X1,75 U7474 6SZN	ECROU AUTOBL. M12	SELBSTSPERR.MUTTER M12	TUERCA M12X1,75 U7474 CL8 ZN
8	B01300845R	DISTANZIALE 40X50X4	SPACER	ENTRETOISE	DISTANZSCHEIBE 40X50X4	DISTANCIADOR 40X50X4
9	B03400287R	INGR. Z=23 10; 1, 1; ISO 16B-1	SMOOTH ROLLER GEAR Z=23-10 1	ENGRANAGE	ZAHNRAD Z=23-10 1	ENGR. Z=23 10; 1, 1; ISO 16B-1
10	B014R3050R	ROSETTA 30 UNI 5714-69 E DEIDR	WASHER	RONDELLE	BEILAGSSCHEIBE	ARANDELA 30 UNI 5714-69 E DEID
11	F01230291R	DADO M30X2 D985 ZN	NUT M30X2 D985 ZN	ECROU AUTOB. M30X2 DIN 985 ZN	SELBSTSP. MU. M30X2 DIN 985 ZN	TUERCA M30X2 D985 ZN
12	B07SP0333R	RULLO AIUTO PRODOTTO SPRINTER	ROLLER SPRINTER			RODILLO DE SOPORTE DE PRODU
13	B00523395R	VITE SPECIALE TTQST M12X45-8.8	SPECIAL SCREW	VIS SPECIALE	SCHRAUBE TTQST M12X 45-8.8	TORNILLO ESPECIAL TTQST M12X4
14	F01410076R	ROS.M12 13X 24X2,5 U6592 ZN	WASHER 12 13X 24X2,5 U6592 ZN	RONDEL. M12 13X24X2,5 U6592 ZN	SCHEIBE M12 13X24X2,5 U6592 ZN	ARAND.M12 13X 24X2,5 U6592 ZN
15	F01230213R	DADO M12X1,75 U7474 CL8 ZN	NUT M12X1,75 U7474 6SZN	ECROU AUTOBL. M12	SELBSTSPERR.MUTTER M12	TUERCA M12X1,75 U7474 CL8 ZN
16	F01030524R	VIT.M16X 2X 30 U5933 10.9 ZD	SCREW M16X2X30 U5933 10.9 ZD			TOR.M16X 2X 30 U5933 10.9 ZD
17	B00523395R	VITE SPECIALE TTQST M12X45-8.8	SPECIAL SCREW	VIS SPECIALE	SCHRAUBE TTQST M12X 45-8.8	TORNILLO ESPECIAL TTQST M12
18	B005C0002R	VITE TTQST 12X35-8.8 TORNITA	SCREW	VIS	SCHRAUBE	TORNILLO TTQST 12X35-8.8 TORN
19	B0C6P0003R	RIPARO RULLI ALETTATI	ROLLERS GUARD	PROTECTION ROULEAUX	SCHUETZ WALZEN	RESGUARDO RODILLOS CON ALET
20	B00523395R	VITE SPECIALE TTQST M12X45-8.8	SPECIAL SCREW	VIS SPECIALE	SCHRAUBE TTQST M12X 45-8.8	TORNILLO ESPECIAL TTQST M12X4
21	F01410076R	ROS.M12 13X 24X2,5 U6592 ZN	WASHER 12 13X 24X2,5 U6592 ZN	RONDEL. M12 13X24X2,5 U6592 ZN	SCHEIBE M12 13X24X2,5 U6592 ZN	ARAND.M12 13X 24X2,5 U6592 ZN
22	F01230213R	DADO M12X1,75 U7474 CL8 ZN	NUT M12X1,75 U7474 6SZN	ECROU AUTOBL. M12	SELBSTSPERR.MUTTER M12	TUERCA M12X1,75 U7474 CL8 ZN
23	B07SP0062R	RULLO LT	LT ROLLER	ROULEAU LT	WALZE LT	RODILLO LT
24	F01020564R	VITE M16X2X35 U5739 8.8ZN	SCR. M16X2X35 U5739 8.8ZN	VIS M 16X35	SCHRAUBE M 16X35	TORNILLO M16X2X35 U5739 8
25	B01515091R	RALLA 17 52 6	FIFTH WHEEL	BUTEE	SCHEIBE	RANGUA 17 52 6
26	B00523421R	VITE SPECIALE TTQST M12X35-8.8	SPECIAL SCREW	VIS SPCIALE	SCHRAUBE TTQST M12X 35-8.8	TORNILLO ESPECIAL TTQST M12X3
27	F01230213R	DADO M12X1,75 U7474 CL8 ZN	NUT M12X1,75 U7474 6SZN	ECROU AUTOBL. M12	SELBSTSPERR.MUTTER M12	TUERCA M12X1,75 U7474 CL8 ZN
28	F01410076R	ROS.M12 13X 24X2,5 U6592 ZN	WASHER 12 13X 24X2,5 U6592 ZN	RONDEL. M12 13X24X2,5 U6592 ZN	SCHEIBE M12 13X24X2,5 U6592 ZN	ARAND.M12 13X 24X2,5 U6592 ZN
29	B01300845R	DISTANZIALE 40X50X4	SPACER	ENTRETOISE	DISTANZSCHEIBE 40X50X4	DISTANCIADOR 40X50X4
30	B03400235R	INGRANAGGIO Z=11-1	GEAR Z=11-1	ENGRENAGE	ZAHNRAD Z=11-1	ENGRANAJE Z=11-1
31	B014R3050R	ROSETTA 30 UNI 5714-69 E DEIDR	WASHER	RONDELLE	BEILAGSSCHEIBE	ARANDELA 30 UNI 5714-69 E DEID
32	F01230291R	DADO M30X2 D985 ZN	NUT M30X2 D985 ZN	ECROU AUTOB. M30X2 DIN 985 ZN	SELBSTSP. MU. M30X2 DIN 985 ZN	TUERCA M30X2 D985 ZN
33	B034P0006R	INGR.RULLO BACC.INF.Z=23-12 1	LOWER GEAR ROLLER Z=23-12 1	ENGRANAGE ROULEAU INF. Z=23-12	ZAHNRAD	ENGR.RODILLO BACC.INF.Z=23-12
34	B02700051R	SUPPORTO FLANGIATO	FLANGED SUPPORT	SUPPORT EMBOUTI	FLANSCHLAGER	SOPORTE CON BRIDA
35	B01300151R	SPES. 40 48 2 ZINCATO	SHIM	ENTRETOISE	DISTANZSTUECK 40 48 2	ESPES. 40 48 2 CINCADO
36	B01300126R	SPES. 40 48 1 ZINC.ST_013	SHIM	ENTRETOISE	DISTANZSTUECK 40 408 1	ESPES. 40 48 1 CINC.EST_013
37	B0C003056R	PIASTRA INTERNA RULLO GRANDE	ROLLER INNER PLATE	TOLE INTERIEUR ROULEAU	WALZEN INNENSCHEIBE	PLACA INTERNA DE RODILLO GRAN
38	B02700106R	SUPP. FLANG. FILETTATO	THREADED FLANGED SUPPORT	SUPPORT FILETE	HALTER	SOP. CON BRIDA ROSCADO
39	F01020512R	VITE M12X1,75X35 U5739 8.8ZN	SCR. M12X1,75X35 U5739 8.8ZN	VIS M12X1,75X35 5739 8.8 ZN	SCHR. M12X1,75X35 5739 8.8 ZN	TORNILLO M12X1,75X35 U5739 8
40	F01410076R	ROS.M12 13X 24X2,5 U6592 ZN	WASHER 12 13X 24X2,5 U6592 ZN	RONDEL. M12 13X24X2,5 U6592 ZN	SCHEIBE M12 13X24X2,5 U6592 ZN	ARAND.M12 13X 24X2,5 U6592 ZN
41	B01300151R	SPES. 40 48 2 ZINCATO	SHIM	ENTRETOISE	DISTANZSTUECK 40 48 2	ESPES. 40 48 2 CINCADO
42	B03400290R	INGR.RULLO GRANDE Z=16-24 1	BIG ROLLER GEAR Z=16-24 1	ENGRANAGE	ZAHNRAD	ENGR.RODILLO GRANDE Z=16-24 1
43	B014R3050R	ROSETTA 30 UNI 5714-69 E DEIDR	WASHER	RONDELLE	BEILAGSSCHEIBE	ARANDELA 30 UNI 5714-69 E DEID
44	F01230291R	DADO M30X2 D985 ZN	NUT M30X2 D985 ZN	ECROU AUTOB. M30X2 DIN 985 ZN	SELBSTSP. MU. M30X2 DIN 985 ZN	TUERCA M30X2 D985 ZN
45	B07S01841R	RULLO GRANDE NEW	BIG ROLLER	ROUELAU GRAND NEW	GROSSE WALZE	RODILLO GRANDE NEW
46	B0C3P0001R	CARTER	GUARD	CARTER	CARTER	C RTER
47	B00370001R	VITE TE M 8X16 A SEZ.TRILOBATA	SCREW TRE M 8X16 SEZ TROUBLED	VIS	SCHRAUBE M 8X15	TORNILLO CHEX M 8X16 A SECC. T
48	B07S01845R	TAZZA RESTRINGIMENTO	CHAMBER TIGHTENING CUPS	TASSE DE RETRECISSEMENT NEW	KAMMERVERENGUNGSTASSEN	PLATILLO DE REDUCCI N
50	B01300125R	SPES. 40 48 0,5 ZINCATO	SHIM GALV	ENTRETOISE GALV	DISTANZSTUECK 40 48 0,5	ESPES. 40 48 0,5 CINCADO
51	B00471235R	VITE TTEI M12X 35-8.8 UNBRA	SCREW	VIS	SCHRAUBE TTEI M12X35-8.8	TORNILLO CAB.ALLEN CON HUECO
52	B01300126R	SPES. 40 48 1 ZINC.ST_013	SHIM	ENTRETOISE	DISTANZSTUECK 40 408 1	ESPES. 40 48 1 CINC.EST_013
53	B01300125R	SPES. 40 48 0,5 ZINCATO	SHIM GALV	ENTRETOISE GALV	DISTANZSTUECK 40 48 0,5	ESPES. 40 48 0,5 CINCADO
54	F01200293R	DADO M12X1,75 U5588 CL8 ZN	NUT M12X1,75 U5588 6S ZN	ECROU M12X1,75 U5588 6S ZN	MUTTER M12X1,75 U5588 6S ZN	TUERCA M12X1,75 U5588 CL8 ZN
55	F01410076R	ROS.M12 13X 24X2,5 U6592 ZN	WASHER 12 13X 24X2,5 U6592 ZN	RONDEL. M12 13X24X2,5 U6592 ZN	SCHEIBE M12 13X24X2,5 U6592 ZN	ARAND.M12 13X 24X2,5 U6592 ZN
56	B03500324R	ALBERO LUNGO SPRINTER	SHAFT	ARBRE LONG SPRINTER	LANGE WELLE	RBOL LARGO SPRINTER
57	B02043517R	CUSC.. 6207-2RS CAT.B-ST004	BEARING	ROULEMENT	LAGER 6207-2RS	COJIN. 6207-2RS CAT.B-ST00
58	B013P0150R	CHIUSURA RULLI PULITORE	ROLLER LOCK	FERMETURE ROULEAUX	WALZEN VERSCHLUSS	CIERRE DE RODILLOS DEL LIMPIAD

TAV_060

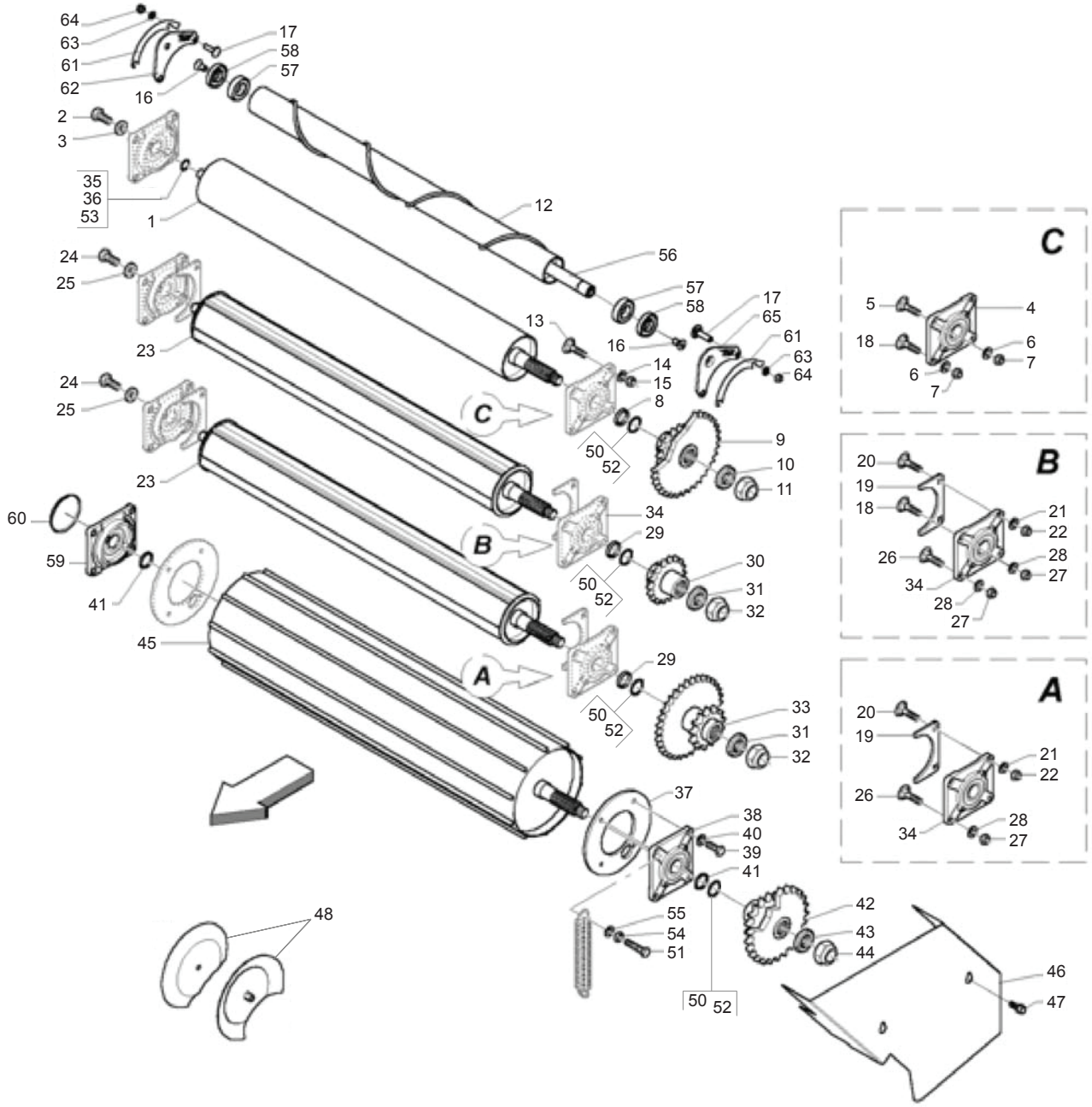

MASCHIO

cod. F07022338

RULLI "H20"
ROLLERS "H20"

TAV_060

Pos.	Cod.	Descrizione	Description	Description	Benennung	Descripcion
59	B02700153R	SUPPORTO FLANGIATO	FLANGED SUPPORT	SUPPORT POUR ROTOR CUT	FLANSCHLAGER	SOPORTE CON BRIDA
60	B04400001R	CAP. CHIUSO 110X10 TIPO C	CAP	COUVERCLE	GESCHLOSSENE KAPPE	CAP. CERRADO 110X10 TIPO C
61	B0C6P0430R	SPES. PER ATTACCO H20	SHIM	ENTRETOISE	DICHTUNG FUER ANSCHLUSS H 20	ESPES. PARA CONEXI N H20
62	B0C6P0429R	ATTACCO DX RULLO SPIRALE H20	ATTACHEMENT	ATTELAGE	ANSCHLUSS RECHTS WALZE	CONEXI N DER RODILLO ESPIRAL H
63	F01410076R	ROS.M12 13X 24X2,5 U6592 ZN	WASHER 12 13X 24X2,5 U6592 ZN	RONDEL. M12 13X24X2,5 U6592 ZN	SCHEIBE M12 13X24X2,5 U6592 ZN	ARAND.M12 13X 24X2,5 U6592 ZN
64	F01230213R	DADO M12X1,75 U7474 CL8 ZN	NUT M12X1,75 U7474 6SZN	ECROU AUTOBL. M12	SELBSTSPERR.MUTTER M12	TUERCA M12X1,75 U7474 CL8 ZN
65	B0C6P0428R	ATTACCO SX RULLO SPIRALE H20	ATTACHEMENT	ATTELAGE	ANSCHLUSS LINKS WALZE	CONEXI N IZQ RODILLO ESPIRAL H

TAV_065

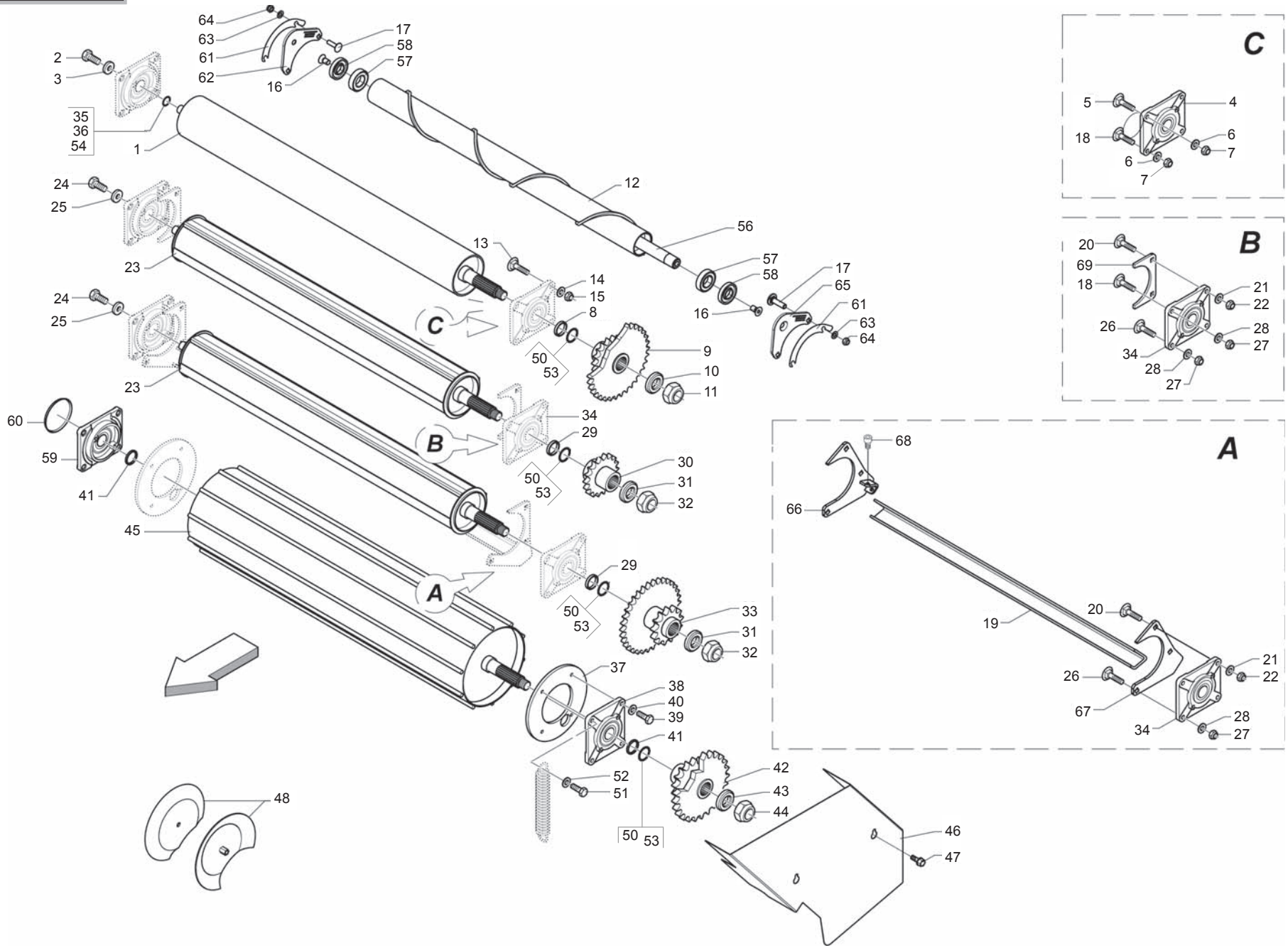

MASCHIO

cod. F07022338

RULLI CUT "H20"
ROLLERS CUT "H20"

TAV_065

Pos.	Cod.	Descrizione	Description	Description	Benennung	Descripcion
1	B07S00942R	RULLO MOT. INFERIORE NL	LOWER MOTOR ROLLER	ROULEAU MOTEUR INFERIEUR	UNTERE MOTORWALZE	RODILLO DEL MOT. INFERIOR NL
2	F01020564R	VITE M16X2X35 U5739 8.8ZN	SCR. M16X2X35 U5739 8.8ZN	VIS M 16X35	SCHRAUBE M 16X35	TORNILLO M16X2X35 U5739 8
3	B01515091R	RALLA 17 52 6	FIFTH WHEEL	BUTEE	SCHEIBE	RANGUA 17 52 6
4	B02700051R	SUPPORTO FLANGIATO	FLANGED SUPPORT	SUPPORT EMBOUTI	FLANSCHLAGER	SOPORTE CON BRIDA
5	B00523421R	VITE SPECIALE TTQST M12X35-8.8	SPECIAL SCREW	VIS SPCIALE	SCHRAUBE TTQST M12X 35-8.8	TORNILLO ESPECIAL TTQST M12X
6	F01410076R	ROS.M12 13X 24X2,5 U6592 ZN	WASHER 12 13X 24X2,5 U6592 ZN	RONDEL. M12 13X24X2,5 U6592 ZN	SCHEIBE M12 13X24X2,5 U6592 ZN	ARAND.M12 13X 24X2,5 U6592 ZN
7	F01230213R	DADO M12X1,75 U7474 CL8 ZN	NUT M12X1,75 U7474 6SZN	ECROU AUTOBL. M12	SELBSTSPERR.MUTTER M12	TUERCA M12X1,75 U7474 CL8 ZN
8	B01300845R	DISTANZIALE 40X50X4	SPACER	ENTRETOISE	DISTANZSCHEIBE 40X50X4	DISTANCIADOR 40X50X4
9	B03400287R	INGR. Z=23 10; 1, 1; ISO 16B-1	SMOOTH ROLLER GEAR Z=23-10 1	ENGRANAGE	ZAHNRAD Z=23-10 1	ENGR. Z=23 10; 1, 1; ISO 16B-1
10	B014R3050R	ROSETTA 30 UNI 5714-69 E DEIDR	WASHER	RONDELLE	BEILAGSSCHEIBE	ARANDELA 30 UNI 5714-69 E DEID
11	F01230291R	DADO M30X2 D985 ZN	NUT M30X2 D985 ZN	ECROU AUTOB. M30X2 DIN 985 ZN	SELBSTSP. MU. M30X2 DIN 985 ZN	TUERCA M30X2 D985 ZN
12	B07SP0333R	RULLO AIUTO PRODOTTO SPRINTER	ROLLER SPRINTER			RODILLO DE SOPORTE DE PRODU
13	B00523395R	VITE SPECIALE TTQST M12X45-8.8	SPECIAL SCREW	VIS SPECIALE	SCHRAUBE TTQST M12X 45-8.8	TORNILLO ESPECIAL TTQST M12X4
14	F01410076R	ROS.M12 13X 24X2,5 U6592 ZN	WASHER 12 13X 24X2,5 U6592 ZN	RONDEL. M12 13X24X2,5 U6592 ZN	SCHEIBE M12 13X24X2,5 U6592 ZN	ARAND.M12 13X 24X2,5 U6592 ZN
15	F01230213R	DADO M12X1,75 U7474 CL8 ZN	NUT M12X1,75 U7474 6SZN	ECROU AUTOBL. M12	SELBSTSPERR.MUTTER M12	TUERCA M12X1,75 U7474 CL8 ZN
16	F01030524R	VIT.M16X 2X 30 U5933 10.9 ZD	SCREW M16X2X30 U5933 10.9 ZD			TOR.M16X 2X 30 U5933 10.9 ZD
17	F01410100R	ROS.M16 17X 30X 3 U6592 ZN	WASHER M16 17X30X3 U6592 ZN	RONDELLE M16 17X30X3 ZN	SCHRAUBE M16 17X 30X3 U6592 ZN	ARAND.M16 17X 30X 3 U6592 ZN
18	B005C0002R	VITE TTQST 12X35-8.8 TORNITA	SCREW	VIS	SCHRAUBE	TORNILLO TTQST 12X35-8.8 TORN
19	B0C1P0218R	CORPO TRAVERSA	CROSSBAR FRAME			CUERPO DEL TRAVESA O
20	B00523395R	VITE SPECIALE TTQST M12X45-8.8	SPECIAL SCREW	VIS SPECIALE	SCHRAUBE TTQST M12X 45-8.8	TORNILLO ESPECIAL TTQST M12X4
21	F01410076R	ROS.M12 13X 24X2,5 U6592 ZN	WASHER 12 13X 24X2,5 U6592 ZN	RONDEL. M12 13X24X2,5 U6592 ZN	SCHEIBE M12 13X24X2,5 U6592 ZN	ARAND.M12 13X 24X2,5 U6592 ZN
22	F01230213R	DADO M12X1,75 U7474 CL8 ZN	NUT M12X1,75 U7474 6SZN	ECROU AUTOBL. M12	SELBSTSPERR.MUTTER M12	TUERCA M12X1,75 U7474 CL8 ZN
23	B07SP0062R	RULLO LT	LT ROLLER	ROULEAU LT	WALZE LT	RODILLO LT
24	F01020564R	VITE M16X2X35 U5739 8.8ZN	SCR. M16X2X35 U5739 8.8ZN	VIS M 16X35	SCHRAUBE M 16X35	TORNILLO M16X2X35 U5739 8
25	B01515091R	RALLA 17 52 6	FIFTH WHEEL	BUTEE	SCHEIBE	RANGUA 17 52 6
26	B00523421R	VITE SPECIALE TTQST M12X35-8.8	SPECIAL SCREW	VIS SPCIALE	SCHRAUBE TTQST M12X 35-8.8	TORNILLO ESPECIAL TTQST M12X3
27	F01230213R	DADO M12X1,75 U7474 CL8 ZN	NUT M12X1,75 U7474 6SZN	ECROU AUTOBL. M12	SELBSTSPERR.MUTTER M12	TUERCA M12X1,75 U7474 CL8 ZN
28	F01410076R	ROS.M12 13X 24X2,5 U6592 ZN	WASHER 12 13X 24X2,5 U6592 ZN	RONDEL. M12 13X24X2,5 U6592 ZN	SCHEIBE M12 13X24X2,5 U6592 ZN	ARAND.M12 13X 24X2,5 U6592 ZN
29	B01300845R	DISTANZIALE 40X50X4	SPACER	ENTRETOISE	DISTANZSCHEIBE 40X50X4	DISTANCIADOR 40X50X4
30	B03400235R	INGRANAGGIO Z=11-1	GEAR Z=11-1	ENGRENAGE	ZAHNRAD Z=11-1	ENGRANAJE Z=11-1
31	B014R3050R	ROSETTA 30 UNI 5714-69 E DEIDR	WASHER	RONDELLE	BEILAGSSCHEIBE	ARANDELA 30 UNI 5714-69 E DEID
32	F01230291R	DADO M30X2 D985 ZN	NUT M30X2 D985 ZN	ECROU AUTOB. M30X2 DIN 985 ZN	SELBSTSP. MU. M30X2 DIN 985 ZN	TUERCA M30X2 D985 ZN
33	B034P0006R	INGR.RULLO BACC.INF.Z=23-12 1	LOWER GEAR ROLLER Z=23-12 1	ENGRANAGE ROULEAU INF. Z=23-12	ZAHNRAD	ENGR.RODILLO BACC.INF.Z=23-12
34	B02700051R	SUPPORTO FLANGIATO	FLANGED SUPPORT	SUPPORT EMBOUTI	FLANSCHLAGER	SOPORTE CON BRIDA
35	B01300151R	SPES. 40 48 2 ZINCATO	SHIM	ENTRETOISE	DISTANZSTUECK 40 48 2	ESPES. 40 48 2 CINCADO
36	B01300125R	SPES. 40 48 0,5 ZINCATO	SHIM GALV	ENTRETOISE GALV	DISTANZSTUECK 40 48 0,5	ESPES. 40 48 0,5 CINCADO
37	B0C003056R	PIASTRA INTERNA RULLO GRANDE	ROLLER INNER PLATE	TOLE INTERIEUR ROULEAU	WALZEN INNENSCHEIBE	PLACA INTERNA DE RODILLO GRAN
38	B02700106R	SUPP. FLANG. FILETTATO	THREADED FLANGED SUPPORT	SUPPORT FILETE	HALTER	SOP. CON BRIDA ROSCADO
39	F01020512R	VITE M12X1,75X35 U5739 8.8ZN	SCR. M12X1,75X35 U5739 8.8ZN	VIS M12X1,75X35 5739 8.8 ZN	SCHR. M12X1,75X35 5739 8.8 ZN	TORNILLO M12X1,75X35 U5739 8
40	F01410076R	ROS.M12 13X 24X2,5 U6592 ZN	WASHER 12 13X 24X2,5 U6592 ZN	RONDEL. M12 13X24X2,5 U6592 ZN	SCHEIBE M12 13X24X2,5 U6592 ZN	ARAND.M12 13X 24X2,5 U6592 ZN
41	B01300151R	SPES. 40 48 2 ZINCATO	SHIM	ENTRETOISE	DISTANZSTUECK 40 48 2	ESPES. 40 48 2 CINCADO
42	B03400290R	INGR.RULLO GRANDE Z=16-24 1	BIG ROLLER GEAR Z=16-24 1	ENGRANAGE	ZAHNRAD	ENGR.RODILLO GRANDE Z=16-24 1
43	B014R3050R	ROSETTA 30 UNI 5714-69 E DEIDR	WASHER	RONDELLE	BEILAGSSCHEIBE	ARANDELA 30 UNI 5714-69 E DEID
44	F01230291R	DADO M30X2 D985 ZN	NUT M30X2 D985 ZN	ECROU AUTOB. M30X2 DIN 985 ZN	SELBSTSP. MU. M30X2 DIN 985 ZN	TUERCA M30X2 D985 ZN
45	B07S01841R	RULLO GRANDE NEW	BIG ROLLER	ROUELAU GRAND NEW	GROSSE WALZE	RODILLO GRANDE NEW
46	B0C3P0001R	CARTER	GUARD	CARTER	CARTER	C RTER
47	B00370001R	VITE TE M 8X16 A SEZ.TRILOBATA	SCREW TRE M 8X16 SEZ TROUBLED	VIS	SCHRAUBE M 8X15	TORNILLO CHEX M 8X16 A SECC. T
48	B07S01845R	TAZZA RESTRINGIMENTO	CHAMBER TIGHTENING CUPS	TASSE DE RETRECISSEMENT NEW	KAMMERVERENGUNGSTASSEN	PLATILLO DE REDUCCI N
50	B01300126R	SPES. 40 48 1 ZINC.ST_013	SHIM	ENTRETOISE	DISTANZSTUECK 40 408 1	ESPES. 40 48 1 CINC.EST_013
51	B00471235R	VITE TTEI M12X 35-8.8 UNBRA	SCREW	VIS	SCHRAUBE TTEI M12X35-8.8	TORNILLO CAB.ALLEN CON HUECO
52	F01420120R	ROS.M12 13X36X2,5 U6593 ZN	WASHER M12 13X36X2,5 U6593 ZN	RONDELLE M12 13X36X2,5 ZN		ARAND.M12 13X36X2,5 U6593 ZN
53	B01300125R	SPES. 40 48 0,5 ZINCATO	SHIM GALV	ENTRETOISE GALV	DISTANZSTUECK 40 48 0,5	ESPES. 40 48 0,5 CINCADO
54	B01300126R	SPES. 40 48 1 ZINC.ST_013	SHIM	ENTRETOISE	DISTANZSTUECK 40 408 1	ESPES. 40 48 1 CINC.EST_013
56	B03500324R	ALBERO LUNGO SPRINTER	SHAFT	ARBRE LONG SPRINTER	LANGE WELLE	RBOL LARGO SPRINTER
57	B02043517R	CUSC.. 6207-2RS CAT.B-ST004	BEARING	ROULEMENT	LAGER 6207-2RS	COJIN. 6207-2RS CAT.B-ST00
58	B013P0150R	CHIUSURA RULLI PULITORE	ROLLER LOCK	FERMETURE ROULEAUX	WALZEN VERSCHLUSS	CIERRE DE RODILLOS DEL LIMPIAD
59	B02700153R	SUPPORTO FLANGIATO	FLANGED SUPPORT	SUPPORT POUR ROTOR CUT	FLANSCHLAGER	SOPORTE CON BRIDA

TAV_065

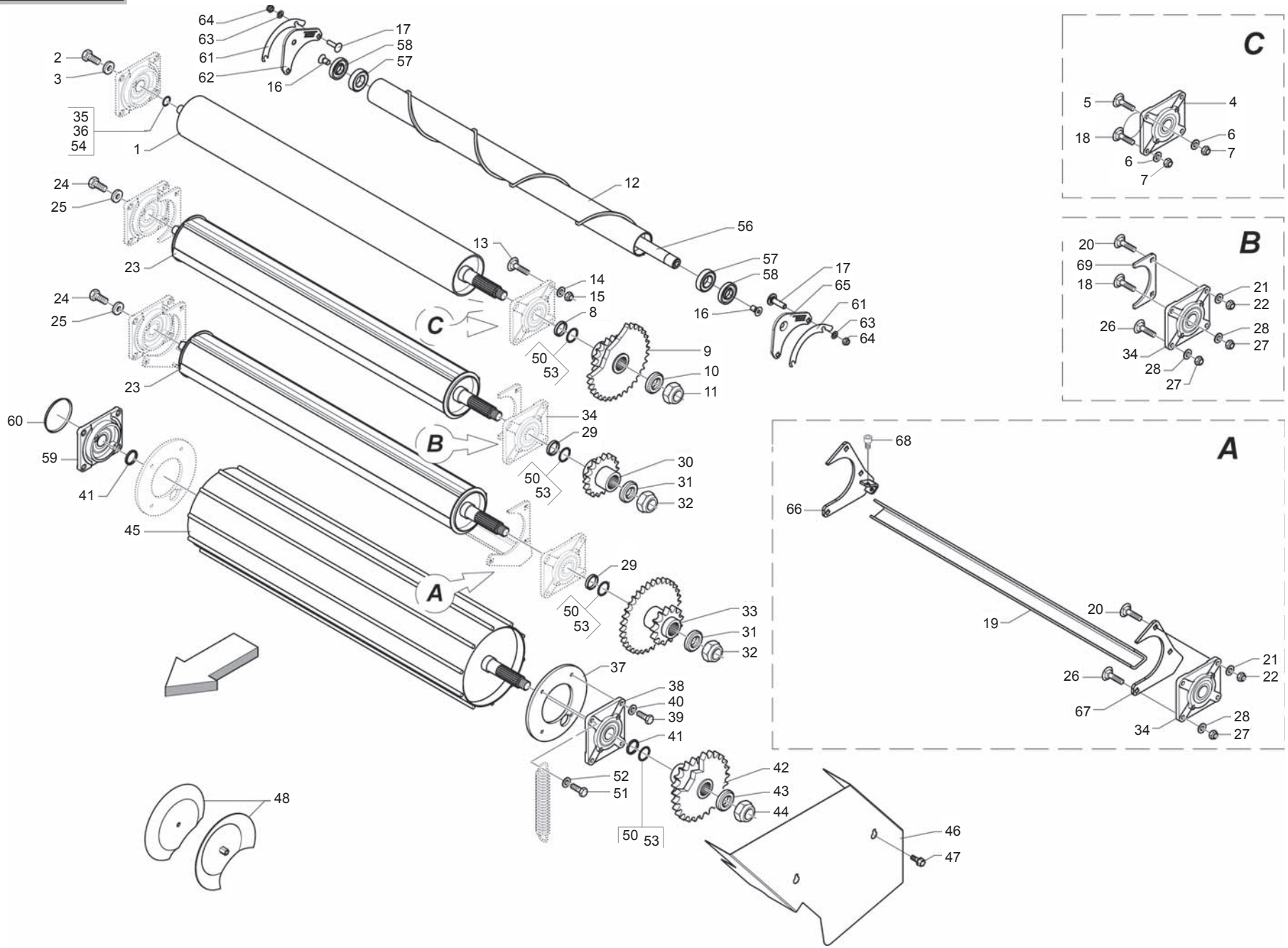

MASCHIO

cod. F07022338

RULLI CUT "H20"
ROLLERS CUT "H20"

TAV_065

Pos.	Cod.	Descrizione	Description	Description	Benennung	Descripcion
60	B04400001R	CAP. CHIUSO 110X10 TIPO C	CAP	COUVERCLE	GESCHLOSSENE KAPPE	CAP. CERRADO 110X10 TIPO C
61	B0C6P0430R	SPES. PER ATTACCO H20	SHIM	ENTRETOISE	DICHTUNG FUER ANSCHLUSS H 20	ESPES. PARA CONEXI N H20
62	B0C6P0429R	ATTACCO DX RULLO SPIRALE H20	ATTACHEMENT	ATTELAGE	ANSCHLUSS RECHTS WALZE	CONEXI N DER RODILLO ESPIRAL H
63	F01410076R	ROS.M12 13X 24X2,5 U6592 ZN	WASHER 12 13X 24X2,5 U6592 ZN	RONDEL. M12 13X24X2,5 U6592 ZN	SCHEIBE M12 13X24X2,5 U6592 ZN	ARAND.M12 13X 24X2,5 U6592 ZN
64	F01230213R	DADO M12X1,75 U7474 CL8 ZN	NUT M12X1,75 U7474 6SZN	ECROU AUTOBL. M12	SELBSTSPERR.MUTTER M12	TUERCA M12X1,75 U7474 CL8 ZN
65	B0C6P0428R	ATTACCO SX RULLO SPIRALE H20	ATTACHEMENT	ATTELAGE	ANSCHLUSS LINKS WALZE	CONEXI N IZQ RODILLO ESPIRAL H
66	B07SP0736R	ATTACCO LATERALE DX	RIGHT COUPLING			CONEXI N LATERAL DER
67	B07SP0735R	ATTACCO LATERALE SX	LEFT COUPLING			CONEXI N LATERAL IZQ.
68	B00471220R	VITE TTEI M12X 20-8.8 UNBRA	SCREW	VIS	SCHRAUBE TTEI M12X 20-8.8	TORNILLO CAB.ALLEN CON HUECO
69	B0C6P0003R	RIPARO RULLI ALETTATI	ROLLERS GUARD	PROTECTION ROULEAUX	SCHUETZ WALZEN	RESGUARDO RODILLOS CON ALET

TAV_070

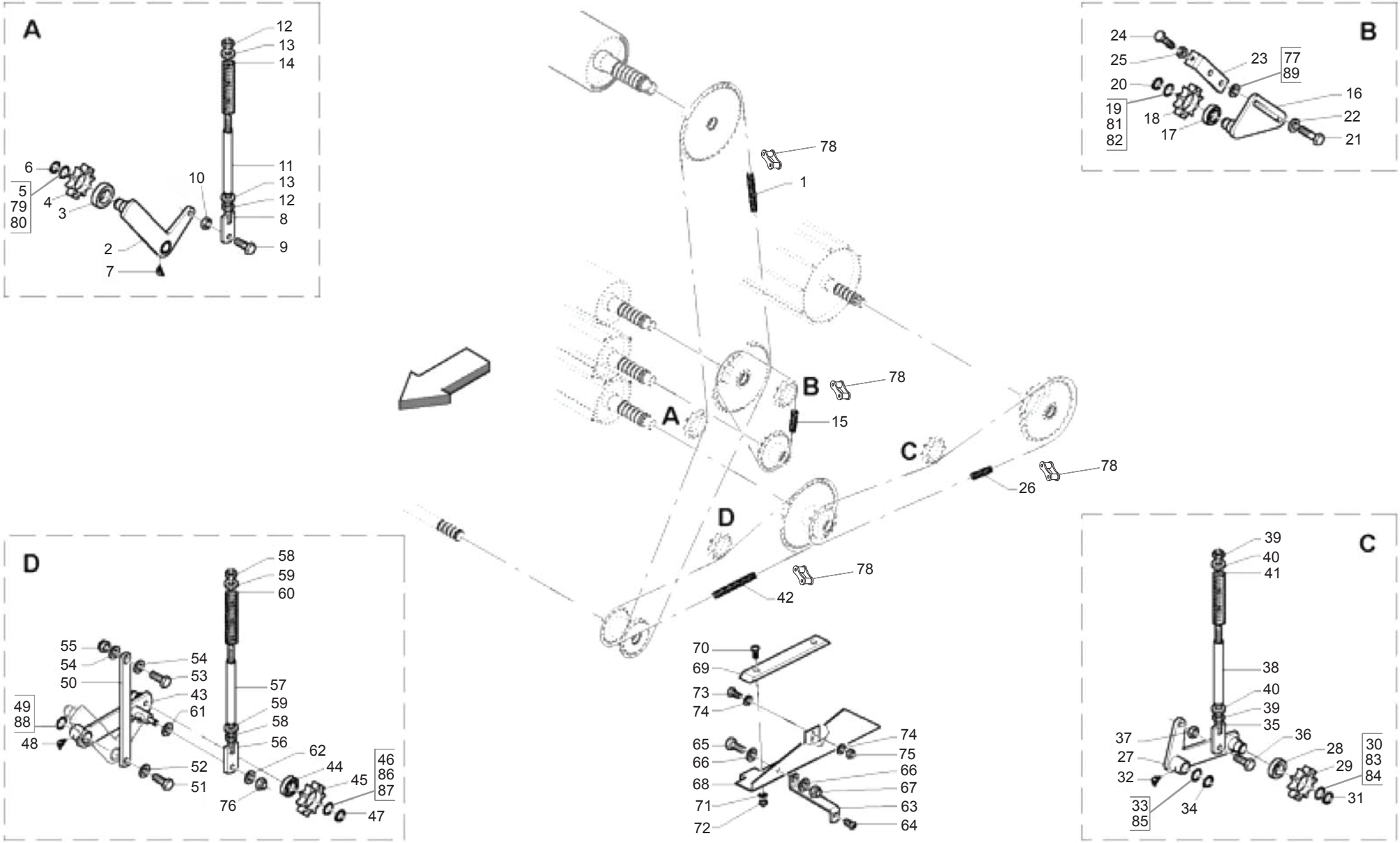

MASCHIO

cod. F07022338

TRASMISSIONE
TRANSMISSION

TAV_070

Pos.	Cod.	Descrizione	Description	Description	Benennung	Descripcion
1	B030E1149R	CATENA RULLI ISO 16 B-1 149M	ROLLER CHAIN	CHAINE ROULEAUX	WALZENKETTE	CADENA DE LOS RODILLOS ISO 16
2	B07S00953R	BRACCIO TENDITORE SX	RIGHT TENSIONER ROD	BRAS TENDEUR GAUCHE	RECHTER SPANNARM	BRAZO TENSOR IZQ
3	F04010170R	CUSC.D25 D52 B15 6205 2RS EX	BEARING D25 D52 B15 6205 2RS	ROULEMENT 6205 2RS	LAGER 6205 2RS	COJIN.D25 D52 B15 6205 2RS EX
4	B03400274R	CORONA Z10-1 ISO F52 TRATT	SPROCKET Z=10-1	ENGRANAGE SPECIAL TRAITE	ZAHNKRANZ Z=10-1	CORONA Z10-1 ISO F52 TRA
5	B01300105R	SPES. 25,5 37 0,5	SHIM	ENTRETOISE	DISTANZSTUECK 25,5 37 0,5	ESPES. 25,5 37 0,5
6	F02050101R	ANELLO E. DE 25X 1,2 U7435 C7	SEEGER RING E. 25X1,2 7435 C70	SEEGER E. 25X 1,2 U7435 C70	SEEGERING E. 25X 1,2 U7435 C70	ANILLO E. DE 25X 1,2 U7435 C7
7	B04210610R	INGRAS HYDR A 45 M 6X1	GREASE NIPPLE	GRAISSEUR HYDRAULIQUE	SCHMIERNIPPEL M6X1 45	ENGRAS. HYDR A 45 M 6X1
8	B07S01441R	TIRANTE GALOPPINO M16	TIGHTENING PULLEY ROD M16	TIRANT M16	FUEHRUNGSROLLENSPANNSTANGE M16	TIRANTE DE LA POLEA M16
9	F01020512R	VITE M12X1,75X35 U5739 8.8ZN	SCR. M12X1,75X35 U5739 8.8ZN	VIS M12X1,75X35 5739 8.8 ZN	SCHR. M12X1,75X35 5739 8.8 ZN	TORNILLO M12X1,75X35 U5739 8
10	F01200293R	DADO M12X1,75 U5588 CL8 ZN	NUT M12X1,75 U5588 6S ZN	ECROU M12X1,75 U5588 6S ZN	MUTTER M12X1,75 U5588 6S ZN	TUERCA M12X1,75 U5588 CL8 ZN
11	B01300157R	DISTANZIALE 16,6X21,3X165	SPACER	ENTRETOISE	ABSTANZSTUECK 16,6X21,3X165	DISTANCIADOR 16,6X21,3X165
12	B00710516R	DADO M16X 2 U5588 6.8 ZN	NUT M16X2 U5588 6.8 ZN	ECROU	MUTTER M16-6S	TUERCA M16X 2 U5588 6.8
13	B01519319R	RALLA 16X38X5	FIFTH WHEEL	BUTEE	SCREIBE	RANGUA 16X38X5
14	B01800046R	MOLLA 6 30 180C	SPRING	RESSORT	FEDER	MUELLE 6 30 180C
15	B030E1027R	CATENA RULLI ISO 16 B-1 27M	ROLLER CHAIN ISO16 B-1 27M	CHAINE ROULEAUX	WALZENKETTE	CADENA DE LOS RODILLOS ISO 16
16	B07S00958R	TIRANTE FISSO	TIE ROD	TIRANT FIXE	ZUGSTANGE	TIRANTE FIJO
17	F04010170R	CUSC.D25 D52 B15 6205 2RS EX	BEARING D25 D52 B15 6205 2RS	ROULEMENT 6205 2RS	LAGER 6205 2RS	COJIN.D25 D52 B15 6205 2RS EX
18	B03400274R	CORONA Z10-1 ISO F52 TRATT	SPROCKET Z=10-1	ENGRANAGE SPECIAL TRAITE	ZAHNKRANZ Z=10-1	CORONA Z10-1 ISO F52 TRA
19	B01300105R	SPES. 25,5 37 0,5	SHIM	ENTRETOISE	DISTANZSTUECK 25,5 37 0,5	ESPES. 25,5 37 0,5
20	F02050101R	ANELLO E. DE 25X 1,2 U7435 C7	SEEGER RING E. 25X1,2 7435 C70	SEEGER E. 25X 1,2 U7435 C70	SEEGERING E. 25X 1,2 U7435 C70	ANILLO E. DE 25X 1,2 U7435 C7
21	B00191250R	VITE M12X1,75X 50 U5737 8.8ZN	SCREW	VIS	SCHRAUBE	TORNILLO M12X1,75X 50 U5737 8
22	B01516038R	RALLA 13 32 5	FIFTH WHEEL	BUTEE	SCHEIBE	RANGUA 13 32 5
23	B0C003605R	TIRANTE INFALDATORE	FEEDER CONNECTING ROD	TIRANT AMENEUR	RAFFER ZUGSTANGE	TIRANTE EMBOCADOR
24	F01020517R	VITE M12X1,75X50 U5739 8.8ZN	SCR. M12X1,75X50 U5739 8.8ZN	VIS M12X1,75X50 5739 8.8 ZN	SCHRA. M12X1,75X50 5739 8.8 ZN	TORNILLO M12X1,75X50 U5739 8
25	F01200293R	DADO M12X1,75 U5588 CL8 ZN	NUT M12X1,75 U5588 6S ZN	ECROU M12X1,75 U5588 6S ZN	MUTTER M12X1,75 U5588 6S ZN	TUERCA M12X1,75 U5588 CL8 ZN
26	B030E1056R	CATENA RULLI ISO 16 B-1 56M	ROLLER CHAIN ISO16 B-1 56M	CHAINE ROULEAUX	WALZENKETTE	CADENA DE LOS RODILLOS ISO 16
27	B07S00953R	BRACCIO TENDITORE SX	RIGHT TENSIONER ROD	BRAS TENDEUR GAUCHE	RECHTER SPANNARM	BRAZO TENSOR IZQ
28	F04010170R	CUSC.D25 D52 B15 6205 2RS EX	BEARING D25 D52 B15 6205 2RS	ROULEMENT 6205 2RS	LAGER 6205 2RS	COJIN.D25 D52 B15 6205 2RS EX
29	B03400274R	CORONA Z10-1 ISO F52 TRATT	SPROCKET Z=10-1	ENGRANAGE SPECIAL TRAITE	ZAHNKRANZ Z=10-1	CORONA Z10-1 ISO F52 TRA
30	B01300104R	SPES. 25,5 37 0,2	SHIM	ENTRETOISE	BEILAGSCHEIBE 25,5 37 0,2	ESPES. 25,5 37 0,2
31	F02050101R	ANELLO E. DE 25X 1,2 U7435 C7	SEEGER RING E. 25X1,2 7435 C70	SEEGER E. 25X 1,2 U7435 C70	SEEGERING E. 25X 1,2 U7435 C70	ANILLO E. DE 25X 1,2 U7435 C7
32	B04210610R	INGRAS HYDR A 45 M 6X1	GREASE NIPPLE	GRAISSEUR HYDRAULIQUE	SCHMIERNIPPEL M6X1 45	ENGRAS. HYDR A 45 M 6X1
33	B01300105R	SPES. 25,5 37 0,5	SHIM	ENTRETOISE	DISTANZSTUECK 25,5 37 0,5	ESPES. 25,5 37 0,5
34	F02050101R	ANELLO E. DE 25X 1,2 U7435 C7	SEEGER RING E. 25X1,2 7435 C70	SEEGER E. 25X 1,2 U7435 C70	SEEGERING E. 25X 1,2 U7435 C70	ANILLO E. DE 25X 1,2 U7435 C7
35	B07S01441R	TIRANTE GALOPPINO M16	TIGHTENING PULLEY ROD M16	TIRANT M16	FUEHRUNGSROLLENSPANNSTANGE M16	TIRANTE DE LA POLEA M16
36	F01020512R	VITE M12X1,75X35 U5739 8.8ZN	SCR. M12X1,75X35 U5739 8.8ZN	VIS M12X1,75X35 5739 8.8 ZN	SCHR. M12X1,75X35 5739 8.8 ZN	TORNILLO M12X1,75X35 U5739 8
37	F01200293R	DADO M12X1,75 U5588 CL8 ZN	NUT M12X1,75 U5588 6S ZN	ECROU M12X1,75 U5588 6S ZN	MUTTER M12X1,75 U5588 6S ZN	TUERCA M12X1,75 U5588 CL8 ZN
38	B01300157R	DISTANZIALE 16,6X21,3X165	SPACER	ENTRETOISE	ABSTANZSTUECK 16,6X21,3X165	DISTANCIADOR 16,6X21,3X165
39	B00710516R	DADO M16X 2 U5588 6.8 ZN	NUT M16X2 U5588 6.8 ZN	ECROU	MUTTER M16-6S	TUERCA M16X 2 U5588 6.8
40	B01519319R	RALLA 16X38X5	FIFTH WHEEL	BUTEE	SCREIBE	RANGUA 16X38X5
41	B01800046R	MOLLA 6 30 180C	SPRING	RESSORT	FEDER	MUELLE 6 30 180C
42	B030E1079R	CATENA RULLI ISO 16 B-1 79M	ROLLER CHAIN ISO16 B-1 79M	CHAINE ROULEAUX	WALZENKETTE	CADENA DE LOS RODILLOS ISO 16
43	B07S01759R	TENDITORE	TENSIONER	TENDEUR	SPANNER	TENSOR
44	F04010170R	CUSC.D25 D52 B15 6205 2RS EX	BEARING D25 D52 B15 6205 2RS	ROULEMENT 6205 2RS	LAGER 6205 2RS	COJIN.D25 D52 B15 6205 2RS EX
45	B03400274R	CORONA Z10-1 ISO F52 TRATT	SPROCKET Z=10-1	ENGRANAGE SPECIAL TRAITE	ZAHNKRANZ Z=10-1	CORONA Z10-1 ISO F52 TRA
46	B01300105R	SPES. 25,5 37 0,5	SHIM	ENTRETOISE	DISTANZSTUECK 25,5 37 0,5	ESPES. 25,5 37 0,5
47	F02050101R	ANELLO E. DE 25X 1,2 U7435 C7	SEEGER RING E. 25X1,2 7435 C70	SEEGER E. 25X 1,2 U7435 C70	SEEGERING E. 25X 1,2 U7435 C70	ANILLO E. DE 25X 1,2 U7435 C7
48	B04210610R	INGRAS HYDR A 45 M 6X1	GREASE NIPPLE	GRAISSEUR HYDRAULIQUE	SCHMIERNIPPEL M6X1 45	ENGRAS. HYDR A 45 M 6X1
49	B01300159R	SPES. 25 37 2 ZINCATO	SHIM GALV	ENTRETOISE GALV	DISTANZSTUECK 25 37 2	ESPES. 25 37 2 CINCADO
50	B0C003057R	COLLEGAMENTO TENDITORI	TIGHTENER CONNECTION	CONNEXION TENDEURS	SPANNERKUPPLUNG	CONEXI N DE LOS TENSORES
51	F01020508R	VITE M12X1,75X25 U5739 8.8ZN	SCR. M12X1,75X25 U5739 8.8ZN	VIS M12X1,75X25 U5739 8.8 ZN	SCHRAUBE M12X1,75X25U57398.8ZN	TORNILLO M12X1,75X25 U5739
52	F01410076R	ROS.M12 13X 24X2,5 U6592 ZN	WASHER 12 13X 24X2,5 U6592 ZN	RONDEL. M12 13X24X2,5 U6592 ZN	SCHEIBE M12 13X24X2,5 U6592 ZN	ARAND.M12 13X 24X2,5 U6592 ZN
53	F01020510R	VITE M12X1,75X30 U5739 8.8ZN	SCR. M12X1,75X30 U5739 8.8ZN	VIS M12X1,75X30 U5739 8.8ZN	SCHRAU.M12X1,75X30 U5739 8.8ZN	TORNILLO M12X1,75X30 U5739
54	F01410076R	ROS.M12 13X 24X2,5 U6592 ZN	WASHER 12 13X 24X2,5 U6592 ZN	RONDEL. M12 13X24X2,5 U6592 ZN	SCHEIBE M12 13X24X2,5 U6592 ZN	ARAND.M12 13X 24X2,5 U6592 ZN
55	F01230213R	DADO M12X1,75 U7474 CL8 ZN	NUT M12X1,75 U7474 6SZN	ECROU AUTOBL. M12	SELBSTSPERR.MUTTER M12	TUERCA M12X1,75 U7474 CL8 ZN
56	B07S01758R	TIRANTE GALOPPINO M16	TIE ROD	TIRANT	ZUGSTANGE	TIRANTE DE LA POLEA M16
57	B01300157R	DISTANZIALE 16,6X21,3X165	SPACER	ENTRETOISE	ABSTANZSTUECK 16,6X21,3X165	DISTANCIADOR 16,6X21,3X165

TAV_070

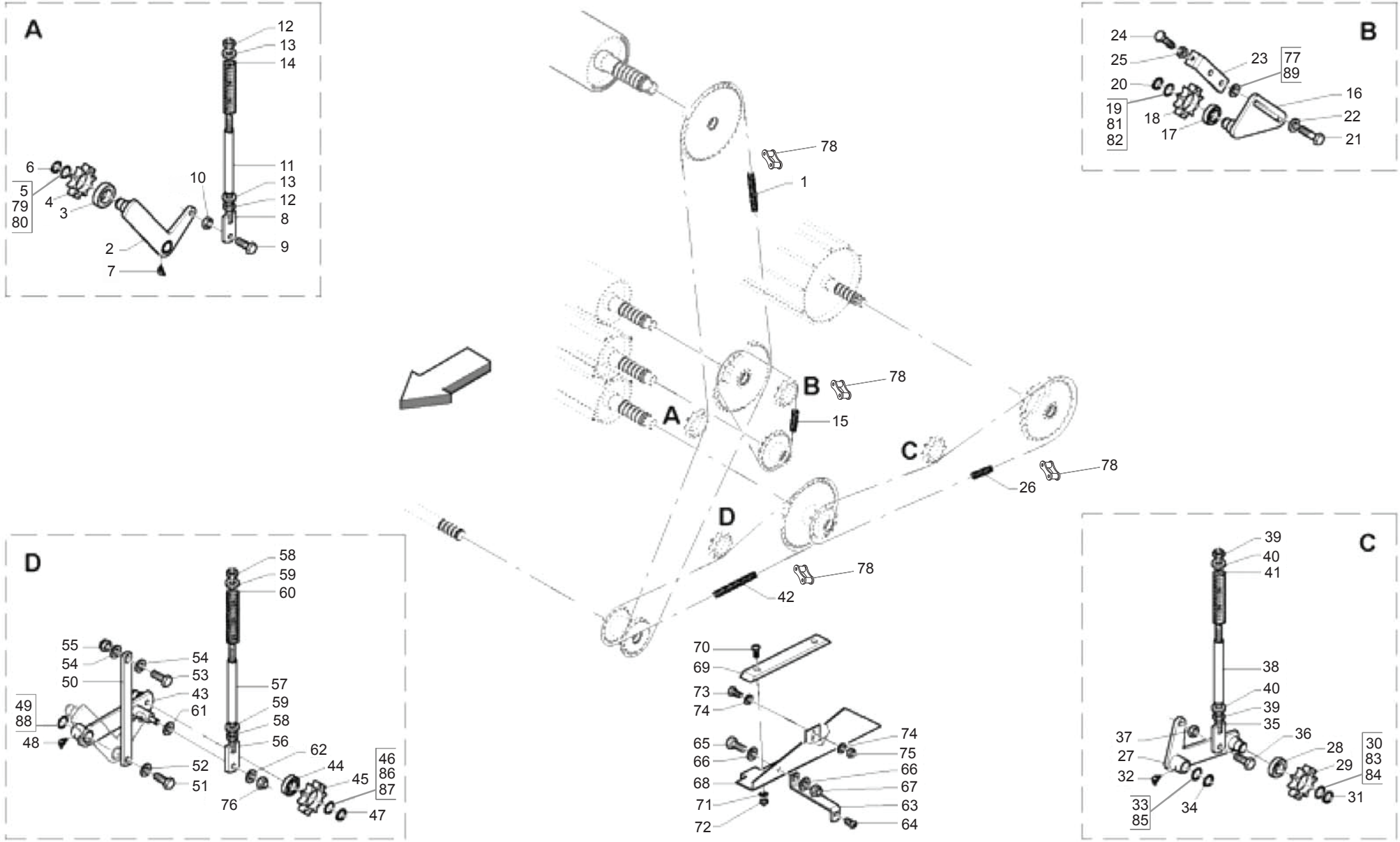
A
12
13
14
11
13
12
8
9
10
6
5
79
80
4
3
2
7
B
24
25
23
77
89
20
19
81
82
18
17
16
22
21
78
1
B
78
A
15
C
78
26
D
78
42
D
58
59
60
55
54
54
53
50
57
43
59
49
88
61
58
48
56
62
52
44
46
86
87
51
45
76
47
70
69
73
74
65
66
68
71
72
74
75
66
67
63
64
C
39
40
41
38
40
39
35
37
36
28
30
83
84
27
29
32
31
33
85
34

TRASMISSIONE
TRANSMISSION

Pos.	Cod.	Descrizione	Description	Description	Benennung	Descripcion
58	B00710516R	DADO M16X 2 U5588 6.8 ZN	NUT M16X2 U5588 6.8 ZN	ECROU	MUTTER M16-6S	TUERCA M16X 2 U5588 6.8
59	B01519319R	RALLA 16X38X5	FIFTH WHEEL	BUTEE	SCREIBE	RANGUA 16X38X5
60	B01800046R	MOLLA 6 30 180C	SPRING	RESSORT	FEDER	MUELLE 6 30 180C
61	F01410076R	ROS.M12 13X 24X2,5 U6592 ZN	WASHER 12 13X 24X2,5 U6592 ZN	RONDEL. M12 13X24X2,5 U6592 ZN	SCHEIBE M12 13X24X2,5 U6592 ZN	ARAND.M12 13X 24X2,5 U6592 ZN
62	F01410076R	ROS.M12 13X 24X2,5 U6592 ZN	WASHER 12 13X 24X2,5 U6592 ZN	RONDEL. M12 13X24X2,5 U6592 ZN	SCHEIBE M12 13X24X2,5 U6592 ZN	ARAND.M12 13X 24X2,5 U6592 ZN
63	B0C005427R	SOSTEGNO LAT. SX INF.CARTER	GUARD FEEDER LEFT SIDE SUPPORT	SUPPORT LATERAL GAUCHE INF. CA	ANSCHLUSS SEITEN	SOPORTE LAT. IZQ1. INF. C RTER
64	B004N0820R	VITE NERA TTEI M 8X 20-10,9	SCREW	VIS	SCHRAUBE TTEI M 8X20-10,9	TORNILLO NEGRO CAB.ALLEN CON
65	F01020512R	VITE M12X1,75X35 U5739 8.8ZN	SCR. M12X1,75X35 U5739 8.8ZN	VIS M12X1,75X35 5739 8.8 ZN	SCHR. M12X1,75X35 5739 8.8 ZN	TORNILLO M12X1,75X35 U5739 8
66	F01410076R	ROS.M12 13X 24X2,5 U6592 ZN	WASHER 12 13X 24X2,5 U6592 ZN	RONDEL. M12 13X24X2,5 U6592 ZN	SCHEIBE M12 13X24X2,5 U6592 ZN	ARAND.M12 13X 24X2,5 U6592 ZN
67	F01230213R	DADO M12X1,75 U7474 CL8 ZN	NUT M12X1,75 U7474 6SZN	ECROU AUTOBL. M12	SELBSTSPERR.MUTTER M12	TUERCA M12X1,75 U7474 CL8 ZN
68	B0C004908R	CARTER	GUARD	CARTER	ABDECKBLECH	C RTER
69	B07631842R	GUIDA CATENA	CHAIN GUIDE	GUIDE	KETTENFUEHRUNG	GU A DE CADENA
70	F01030208R	VITE M 8X1,25X 20 U7380 10.9ZN	SCREW M8X1,25X20 U7380 10.9ZN			TORNILLO M 8X1,25X 20 U7380 10
71	F01410051R	ROS.M8 8,4X 17X1,6 U6592 ZN	WASHER M8 8,4X17X1,6 U6592 ZN	RONDELLE M8 8,4X17X1,6 ZN	SCHEIBE M8 8,4X17X1,6 U6592 ZN	ARAND.M8 8,4X 17X1,6 U6592 ZN
72	B00920208R	DADO AUTOB.BASSO M 8-5S D985	NUT M8X1 D985 8ZN	ECROU	SELBSTSICHERNDE MUTTER M8-5S	TUERCA M8X1 D985 8
73	F01020472R	VITE M10X1,5X25 U5739 8.8ZN	SCR. M10X1,5X25 U5739 8.8ZN	VIS M10X1,5X25 U5739 8.8 ZN	SCHRAUBE M10X1,5X25 U5739 8.8	TORNILLO M10X1,5X25 U5739 8.8
74	F01410062R	ROS.M10 10,5X 18X 2 U6592 ZN	WASHER M10 10,5X 18X 2 U6592	RONDELLE M10 10,5X18X2 ZN	DICHTUNGSRING M10 10,5X18X2 ZN	ARAND.M10 10,5X 18X 2 U6592 ZN
75	F01230202R	DADO M10X 1,5 D985 8 ZN	NUT M10 D985	ECROU AUTOBL. M10	SELBSTSPERR.MUTTER M10	TUERCA M10X 1,5 D985 8
76	F01230213R	DADO M12X1,75 U7474 CL8 ZN	NUT M12X1,75 U7474 6SZN	ECROU AUTOBL. M12	SELBSTSPERR.MUTTER M12	TUERCA M12X1,75 U7474 CL8 ZN
77	F01420120R	ROS.M12 13X36X2,5 U6593 ZN	WASHER M12 13X36X2,5 U6593 ZN	RONDELLE M12 13X36X2,5 ZN		ARAND.M12 13X36X2,5 U6593 ZN
78	B030E0017R	GIUNTO MOLL N26 ISO 16 B-1	SPRING JOINT N.26 ISO 16 B-1	JOINT RESSORT	KETTENFEDER	JUNTA DE MUELL N26 ISO 16 B-1
79	B01300104R	SPES. 25,5 37 0,2	SHIM	ENTRETOISE	BEILAGSCHEIBE 25,5 37 0,2	ESPES. 25,5 37 0,2
80	B01300104R	SPES. 25,5 37 0,2	SHIM	ENTRETOISE	BEILAGSCHEIBE 25,5 37 0,2	ESPES. 25,5 37 0,2
81	B01300104R	SPES. 25,5 37 0,2	SHIM	ENTRETOISE	BEILAGSCHEIBE 25,5 37 0,2	ESPES. 25,5 37 0,2
82	B01300104R	SPES. 25,5 37 0,2	SHIM	ENTRETOISE	BEILAGSCHEIBE 25,5 37 0,2	ESPES. 25,5 37 0,2
83	B01300105R	SPES. 25,5 37 0,5	SHIM	ENTRETOISE	DISTANZSTUECK 25,5 37 0,5	ESPES. 25,5 37 0,5
84	B01300104R	SPES. 25,5 37 0,2	SHIM	ENTRETOISE	BEILAGSCHEIBE 25,5 37 0,2	ESPES. 25,5 37 0,2
85	B01300159R	SPES. 25 37 2 ZINCATO	SHIM GALV	ENTRETOISE GALV	DISTANZSTUECK 25 37 2	ESPES. 25 37 2 CINCADO
86	B01300104R	SPES. 25,5 37 0,2	SHIM	ENTRETOISE	BEILAGSCHEIBE 25,5 37 0,2	ESPES. 25,5 37 0,2
87	B01300104R	SPES. 25,5 37 0,2	SHIM	ENTRETOISE	BEILAGSCHEIBE 25,5 37 0,2	ESPES. 25,5 37 0,2
88	B01300105R	SPES. 25,5 37 0,5	SHIM	ENTRETOISE	DISTANZSTUECK 25,5 37 0,5	ESPES. 25,5 37 0,5
89	B0C6P0205R	SPES. 13X30X1	SHIM	ENTRETOISE	DICHTUNG 13X30X1	ESPES. 13X30X1

TAV_075

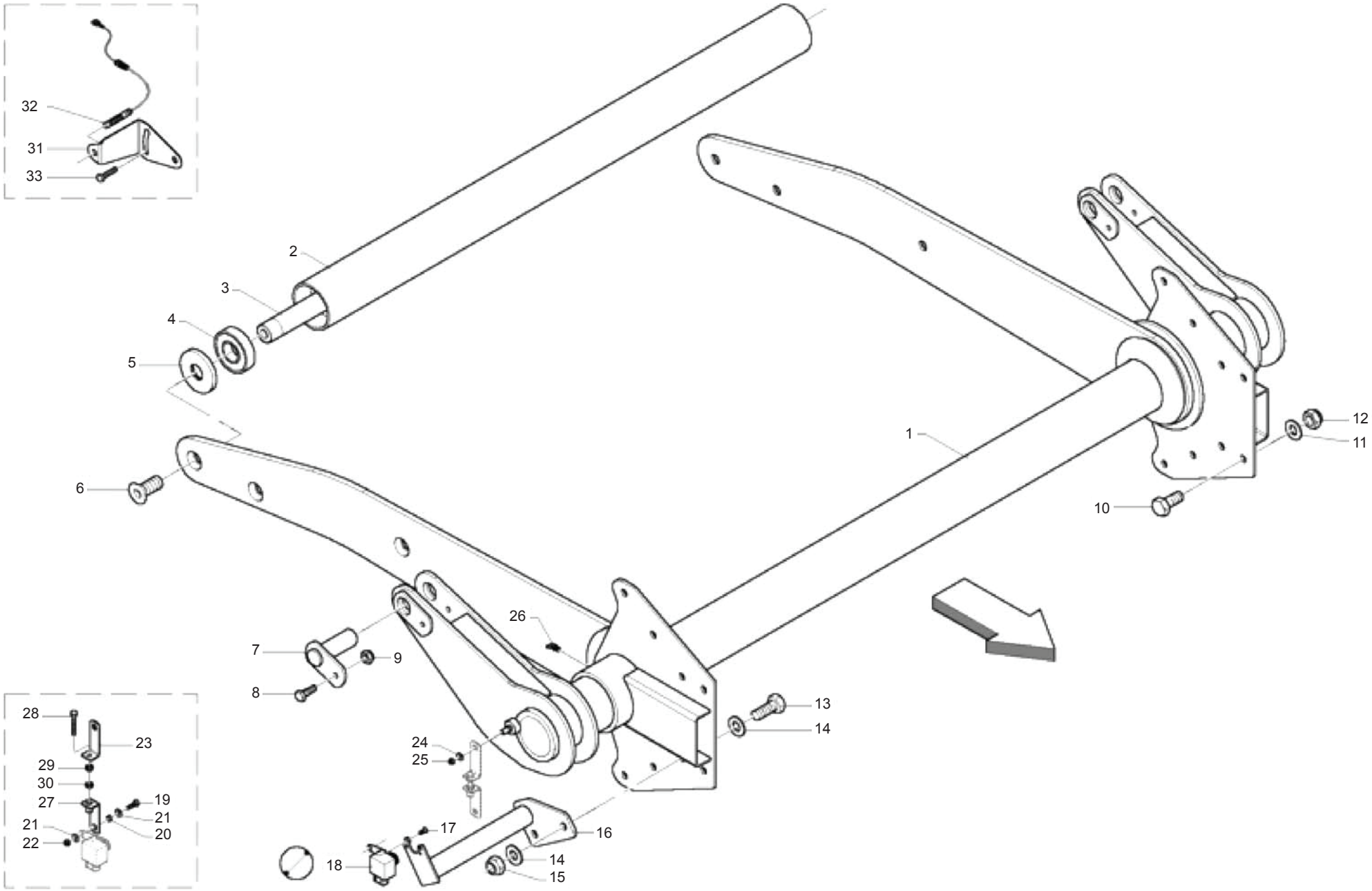

MASCHIO

cod. F07022338

BILANCIERE
BELT TENSIONER ARM

TAV_075

Pos.	Cod.	Descrizione	Description	Description	Benennung	Descripcion
1	B07S01630R	BRACCIO TENDICINGHIE 265	BELT TENSIONER ARM 265	TENDEUR DE COURROIE 265	GURTENSPANNERARM 265	BRAZO TENSOR DE CORREA 265
2	B03500165R	RULLO FOLLE	IDLE ROLLER	ROULEAU FOU	UMLENKWALZE	RODILLO LOCO
3	B03500213R	ALBERO CORTO	SHORT SHAFT	ARBRE COURT	KURZE WELLE	RBOL CORTO
4	B02040002R	CUSCINETTO 6307-2RS CAT.KST004	BEARING	ROULEMENT CAT.KST004	LAGER 6307-2RS	COJINETE 6307-2RS CAT.KST004
5	B01300623R	CHIUSURA RULLI FOLLI	IDLE ROLLER LOCK	FERMETURE ROULEAUX FOUX	UMLENKWALZENVERSCHLUSS	CIERRE DE RODILLOS LOCOS
6	F01030148R	VITE M16X2X35 U5933 10.9ZD	SCREW M16X2X35 U5933 10.9ZD	VIS M16X2X35 U5933 10.9ZD	SCHRAUBE M16X2X35 U5933 10.9ZD	TORNILLO M16X2X35 U5933 10.9ZD
7	B07S00936R	SPINA MARTINETTO PRESS.BALLA	JACK PIN	AXE VERIN	ZYLINDERBOLZEN	CLAVIJA DE CILINDRO PRENSADOR
8	F01020065R	VITE M 8X1,25X 30 U5737 8.8ZN	SCREW M 8X1,25X 30 U5737 8.8Z			TORNILLO M 8X1,25X 30 U5737 8.
9	B00920208R	DADO AUTOB.BASSO M 8-5S D985	NUT M8X1 D985 8ZN	ECROU	SELBSTSICHERNDE MUTTER M8-5S	TUERCA M8X1 D985 8
10	F01020510R	VITE M12X1,75X30 U5739 8.8ZN	SCR. M12X1,75X30 U5739 8.8ZN	VIS M12X1,75X30 U5739 8.8ZN	SCHRAU.M12X1,75X30 U5739 8.8ZN	TORNILLO M12X1,75X30 U5739
11	F01410076R	ROS.M12 13X 24X2,5 U6592 ZN	WASHER 12 13X 24X2,5 U6592 ZN	RONDEL. M12 13X24X2,5 U6592 ZN	SCHEIBE M12 13X24X2,5 U6592 ZN	ARAND.M12 13X 24X2,5 U6592 ZN
12	F01230213R	DADO M12X1,75 U7474 CL8 ZN	NUT M12X1,75 U7474 6SZN	ECROU AUTOBL. M12	SELBSTSPERR.MUTTER M12	TUERCA M12X1,75 U7474 CL8 ZN
13	F01020512R	VITE M12X1,75X35 U5739 8.8ZN	SCR. M12X1,75X35 U5739 8.8ZN	VIS M12X1,75X35 5739 8.8 ZN	SCHR. M12X1,75X35 5739 8.8 ZN	TORNILLO M12X1,75X35 U5739 8
14	F01410076R	ROS.M12 13X 24X2,5 U6592 ZN	WASHER 12 13X 24X2,5 U6592 ZN	RONDEL. M12 13X24X2,5 U6592 ZN	SCHEIBE M12 13X24X2,5 U6592 ZN	ARAND.M12 13X 24X2,5 U6592 ZN
15	F01230213R	DADO M12X1,75 U7474 CL8 ZN	NUT M12X1,75 U7474 6SZN	ECROU AUTOBL. M12	SELBSTSPERR.MUTTER M12	TUERCA M12X1,75 U7474 CL8 ZN
16	B07S01471R	SOSTEGNO POTENZIOMETRO	POTENTIOMETER SUPPORT	SUPPORT POTENTIOMETRE	POTENZIOMETERHALTERUNG	SOPORTE POTENCI METRO
17	B00440510R	VITE TSPEI M 5X 10-10.9 UNI 5	SCREW	VIS	SCHRAUBE TSPEI M5X 10-10.9	TORNILLO CAB. AVE.ALLEN PAV.M
18	BZMRP0002R	POTENZIOMETRO DIMENSIONE BALLA	POTENTIOMETER CABLE	POTENTIOMETRE CABLE	POTENTIOMETER ADAPTERKABEL	POTENCI METRO DIMENSIONES DE
19	B00180620R	VITE M6X1X20 U5739 8.8ZN	SCREW	VIS	SCHRAUBE	TORNILLO M6X1X20 U5739 8
20	B01300866R	BOCCOLA DI MOVIMENTO	BUSH	DOUILLE	BUCHSE	CASQUILLO DE MOVIMIENTO
21	F01420035R	ROS.M6 6,4X 18X1,6 U6593 ZN	WASHER D.6	RONDELLE D.6	KUPFERSCHEIBE D.6	ARAND.M6 6,4X 18X1,6 U6593
22	F01230184R	DADO M6X1 D985 8ZN	NUT M6X1 D985 8ZN			TUERCA M6X1 D985 8
23	B0C6P0052R	BASE DI REGOLAZIONE	ADJUSTMENT BASE	BASE DE REGLAGE	GRUND EINSTELLUNG	BASE DE REGULACI N
24	F01420048R	ROS.M8 8,4X 24X 2 U6593 ZN	WASHER M8 8,4X 24X2 U6593 ZN	RONDELLE M8 8,4X24X 2 U6593 ZN	SCHEIBEN M8 8,4X24X 2 U6593 ZN	ARAND.M8 8,4X 24X 2 U6593 ZN
25	B00920208R	DADO AUTOB.BASSO M 8-5S D985	NUT M8X1 D985 8ZN	ECROU	SELBSTSICHERNDE MUTTER M8-5S	TUERCA M8X1 D985 8
26	B04211010R	INGRAS HYDR M10X1 45	GREASE NIPPLE	GRAISSEUR HYDRAULIQUE	SCHMIERNIPPEL M10X1 45	ENGRAS. HYDR M10X1 45
27	B07MP0014R	BASE REGOLAZIONE	ADJSUTMENT BASE	BASE REGLAGE	EINSTELLUNGS BASIS	BASE DE REGULACI N
28	F01020413R	VITE M6X1X40 U5739 8.8ZN	SCR. M6X1X40 U5739 8.8ZN	VIS M 6X1X40	SCHRAUBE M 6X1X40	TORNILLO M6X1X40 U5739 8
29	F01230184R	DADO M6X1 D985 8ZN	NUT M6X1 D985 8ZN			TUERCA M6X1 D985 8
30	F01200232R	DADO M6X1 U5588 CL8 ZN	NUT M6X1 U5588 6.8ZN	ECROU 6 UNI 5588 6.8 ZN	MUTTER 6 UNI 5588 6.8 ZN	TUERCA M6X1 U5588 CL8 ZN
31	B0C6P0110R	PORTA SENSORE	SENSOR SUPPORT			PUERTA SENSOR
32	B0E0P0013R	SENS DIG.SCATOLA E BILANCERE	DIGITAL SENSOR PROXIMITY M12	CAPTEUR DIGITAL AVEC PROXIMITY	SENSOR MIT PROXIMITY M 12	SENS DIG.CAJA Y BALANC N
33	B00180655R	VITE M6X1X 55 U5739 8.8ZN	SCREW	VIS	ZINKSCHRAUBE TE M6X55-8.8 UNI	TORNILLO M6X1X 55 U5739 8.8ZN

TAV_080

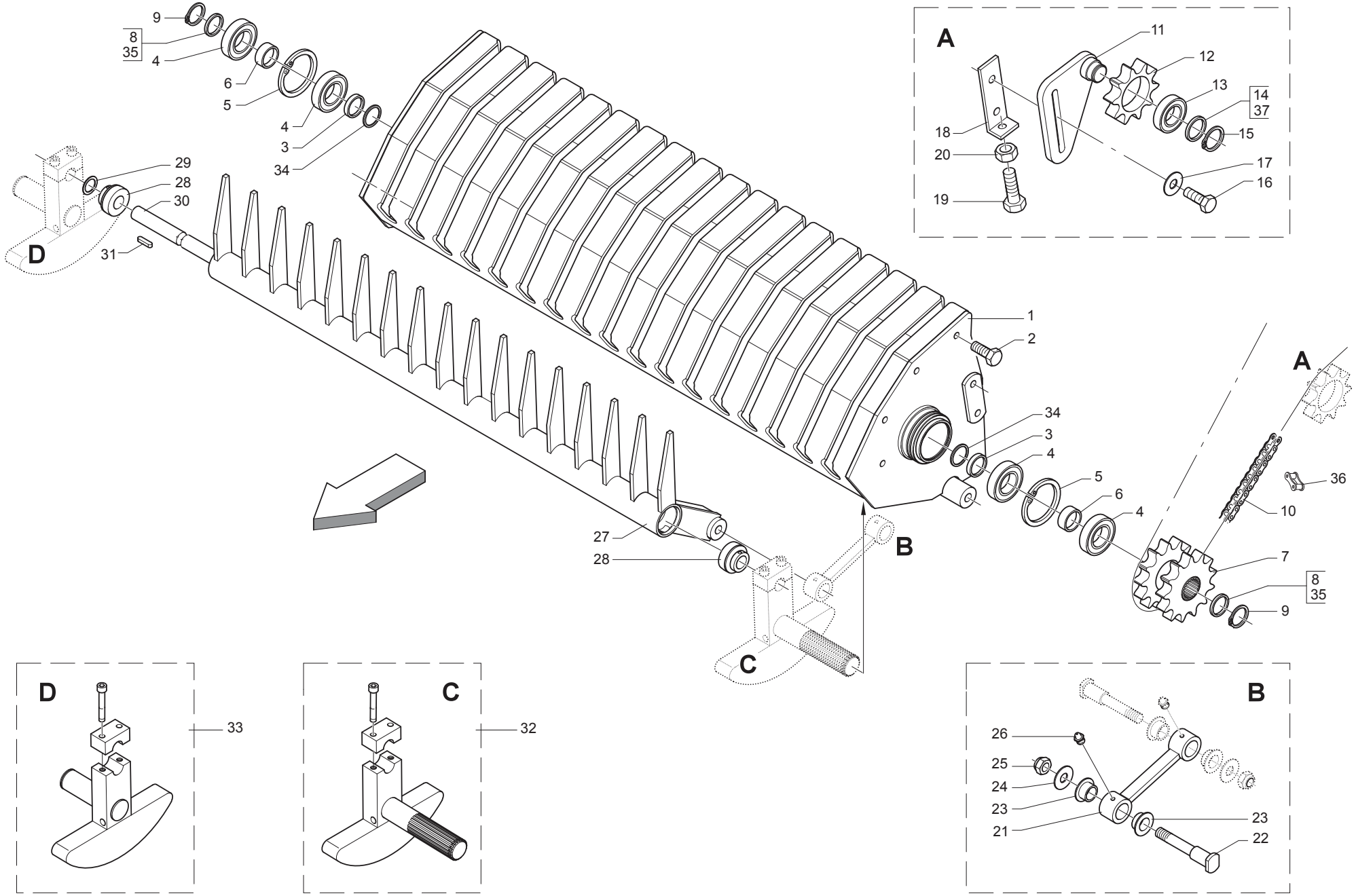

MASCHIO

cod. F07022338

INFALDATORE
FEEDING SYSTEM

TAV_080

Pos.	Cod.	Descrizione	Description	Description	Benennung	Descripcion
1	B07S00967R	TELAIO INFALDATORE	FEEDING SYSTEM FRAME	CHASSIS AMENEUR	ZUBRINGER RAHMEN	BASTIDOR EMBOCADOR
2	F01020508R	VITE M12X1,75X25 U5739 8.8ZN	SCR. M12X1,75X25 U5739 8.8ZN	VIS M12X1,75X25 U5739 8.8 ZN	SCHRAUBE M12X1,75X25U57398.8ZN	TORNILLO M12X1,75X25 U5739
3	B01300605R	DISTANZIALE 35X42X 5	SPACER	ENTRETOISE	DISTANZSTUECK 35X42X5	DISTANCIADOR 35X42X 5
4	B02043517R	CUSC.. 6207-2RS CAT.B-ST004	BEARING	ROULEMENT	LAGER 6207-2RS	COJIN. 6207-2RS CAT.B-ST00
5	F02050403R	ANELLO E. DI 72X 2,5 U7437 C7	SEEGER RING E.72X2,5 U7437 C70	SEEGER E. 72X 2,5 U7437 C70	SEEGERING E. 72X 2,5 U7437 C70	ANILLO E. DI 72X 2,5 U7437 C7
6	B01300523R	DISTANZIALE 35X 45X12,5	SPACER	ENTRETOISE	DISTANZSTUECK 35X45X12,5	DISTANCIADOR 35X 45X12,5
7	B03400237R	INGR.DOPPIO Z12-12 1 INFALD.	DOUBLE GEAR Z=12 21 1 FOR RAK	ENGRENAGE DOUBLE	DOPPEL ZAHNRAD Z=12-12 1	ENGR.DOBLE Z12-12 1 EMBOCADO
8	B01534416R	SPES. 35 43 1 ZINCATO	SHIM	ENTRETOISE	AUSGLEICHSCHEIBE 35X43X1	ESPES. 35 43 1 CINCADO
9	F02050145R	ANELLO E. DE 35X1,5 U7435 C70	SEEGER RING D.35	BAGUE SEEGER D.35	SEEGERRING D.35	ANILLO E. DE 35X1,5 U7435 C70
10	B030E0017R	GIUNTO MOLL N26 ISO 16 B-1	SPRING JOINT N.26 ISO 16 B-1	JOINT RESSORT	KETTENFEDER	JUNTA DE MUELL N26 ISO 16 B-1
11	B07S00958R	TIRANTE FISSO	TIE ROD	TIRANT FIXE	ZUGSTANGE	TIRANTE FIJO
12	B03400274R	CORONA Z10-1 ISO F52 TRATT	SPROCKET Z=10-1	ENGRANAGE SPECIAL TRAITE	ZAHNKRANZ Z=10-1	CORONA Z10-1 ISO F52 TRA
13	F04010170R	CUSC.D25 D52 B15 6205 2RS EX	BEARING D25 D52 B15 6205 2RS	ROULEMENT 6205 2RS	LAGER 6205 2RS	COJIN.D25 D52 B15 6205 2RS EX
14	B01300104R	SPES. 25,5 37 0,2	SHIM	ENTRETOISE	BEILAGSCHEIBE 25,5 37 0,2	ESPES. 25,5 37 0,2
15	F02050101R	ANELLO E. DE 25X 1,2 U7435 C7	SEEGER RING E. 25X1,2 7435 C70	SEEGER E. 25X 1,2 U7435 C70	SEEGERING E. 25X 1,2 U7435 C70	ANILLO E. DE 25X 1,2 U7435 C7
16	F01020152R	VITE M12X1,75X40 U5737 8.8ZN	SCR. M12X1,75X40 U5737 8.8ZN	VIS M12X1,75X40 U5737 8.8 ZN	SCHRAUBE M12X1,75X40U57378.8ZN	TORNILLO M12X1,75X40 U5737 8.
17	B01516038R	RALLA 13 32 5	FIFTH WHEEL	BUTEE	SCHEIBE	RANGUA 13 32 5
18	B0C005308R	TIRANTE INFALDATORE	FEEDER TIE ROD	TIRANT AMENEUR	RAFFER ZUSTAB	TIRANTE EMBOCADOR
19	F01020521R	VITE M12X1,75X65 U5739 8.8ZN	SCR. M12X1,75X65 U5739 8.8ZN	VIS M12X1,75X65 U5739 8.8ZN	SCHRAU.M12X1,75X65 U5739 8.8ZN	TORNILLO M12X1,75X65 U5739 8
20	F01200293R	DADO M12X1,75 U5588 CL8 ZN	NUT M12X1,75 U5588 6S ZN	ECROU M12X1,75 U5588 6S ZN	MUTTER M12X1,75 U5588 6S ZN	TUERCA M12X1,75 U5588 CL8 ZN
21	B07S00966R	BIELLA INFALDATORE	FEEDER CONNECTING ROD	BIELLE AMENEUR	RAFFERPLEUELSTANGE	BIELA EMBOCADOR
22	B035P0159R	PERNO BIELLA INFALDATORE	CONNECTING ROD PIN	TOURILLON BIELLE	PLEUELZAPFEN	PERNO BIELA EMBOCADOR
23	B02500002R	BUSSOLA NYLON 22X28X16,5	BUSH NYLON 22X28X16,5	DOUILLE EN NYLON 22X28X16,5	NYLONBUCHSE	CASQUILLO DE NAILON 22X28X16,5
24	B0C6P1263R	RALLA 22,2X40X3 OTTONE	WASHER	BUTEE	SCHEIBE	RANGUA 22,2X40X3 LAT N
25	B00920516R	DADO M16X 1,5 D985 6S ZN	NUT M16X1,5 D985 6S ZN	ECROU	SELBSTSICHERNDE MUTTER M16-5S	TUERCA M16X 1,5 D985 6S
26	F01100011R	ING.M 6X1 7663-A 9SMNPB28 ZN	GREASE NIPPLE M6X1 7663-A ZN	GRAISS. A BILLE M6X1 7663A ZN	SCHMIERBUECHE M6X1 7663-A ZN	ENG.M 6X1 7663-A 9SMNPB28 ZN
27	B07S00983R	INFALDATORE NL	FEEDER	AMENEUR	RAFFER	EMBOCADOR NL
28	B07S00126R	CUSCINETTO CON RALLA INFALDAT.	BEARING WITH FIFTH WHEEL	ROULEMENT AVEC BUTEE	LAGER MIT RING	COJINETE CON RANGUA
29	B01300106R	SPES. 25,5 37 1 ZINCATO	SHIM GALV	ENTRETOISE GALV	DISTANZSTUECK 25,5 37 1	ESPES. 25,5 37 1 CINCADO
30	B03500038R	ALBERO INFALDATORE	FEEDER SHAFT	ARBRE AMENEUR	RAFFER ANTRIEBSWELLE	RBOL EMBOCADOR
31	F02150063R	LINGUETTA 8X 7X 22 U6604A	TAB 8 X 7 X 22 U6604A			LENG ETA 8X 7X 22 U6604A
32	B07S00978R	BIELLA MOTORE INFALDATORE	MOTOR CONNECTING ROD	BIELLE MOTEUR AMENEUR	RAFFER TREIBSTANGE	BIELA DEL MOTOR DEL EMBOCADO
33	B07S00979R	BIELLA FOLLE INFALDATORE	IDLE CONNECTING ROD	BIELLE FOLLE AMENEUR	RAFFER UMLENKSTANGE	BIELA LOCA EMBOCADOR
34	B01522427R	SPES. 35 47 2	SHIM	ENTRETOISE	SCHEIBE	ESPES. 35 47 2
35	B01534415R	SPES. 35 43 0,5 ZINCATO	SHIM	ENTRETOISE	AUSGLEICHSCHEIBE 35X43X0,5	ESPES. 35 43 0,5 CINCADO
36	B030E1039R	CATENA RULLI ISO 16 B-1 39M	ROLLER CHAIN ISO16 B-1 39M	CHAINE ROULEAUX	WALZENKETTE ISO 16 B-1 39M	CADENA DE LOS RODILLOS ISO 16
37	B01300104R	SPES. 25,5 37 0,2	SHIM	ENTRETOISE	BEILAGSCHEIBE 25,5 37 0,2	ESPES. 25,5 37 0,2

TAV_085

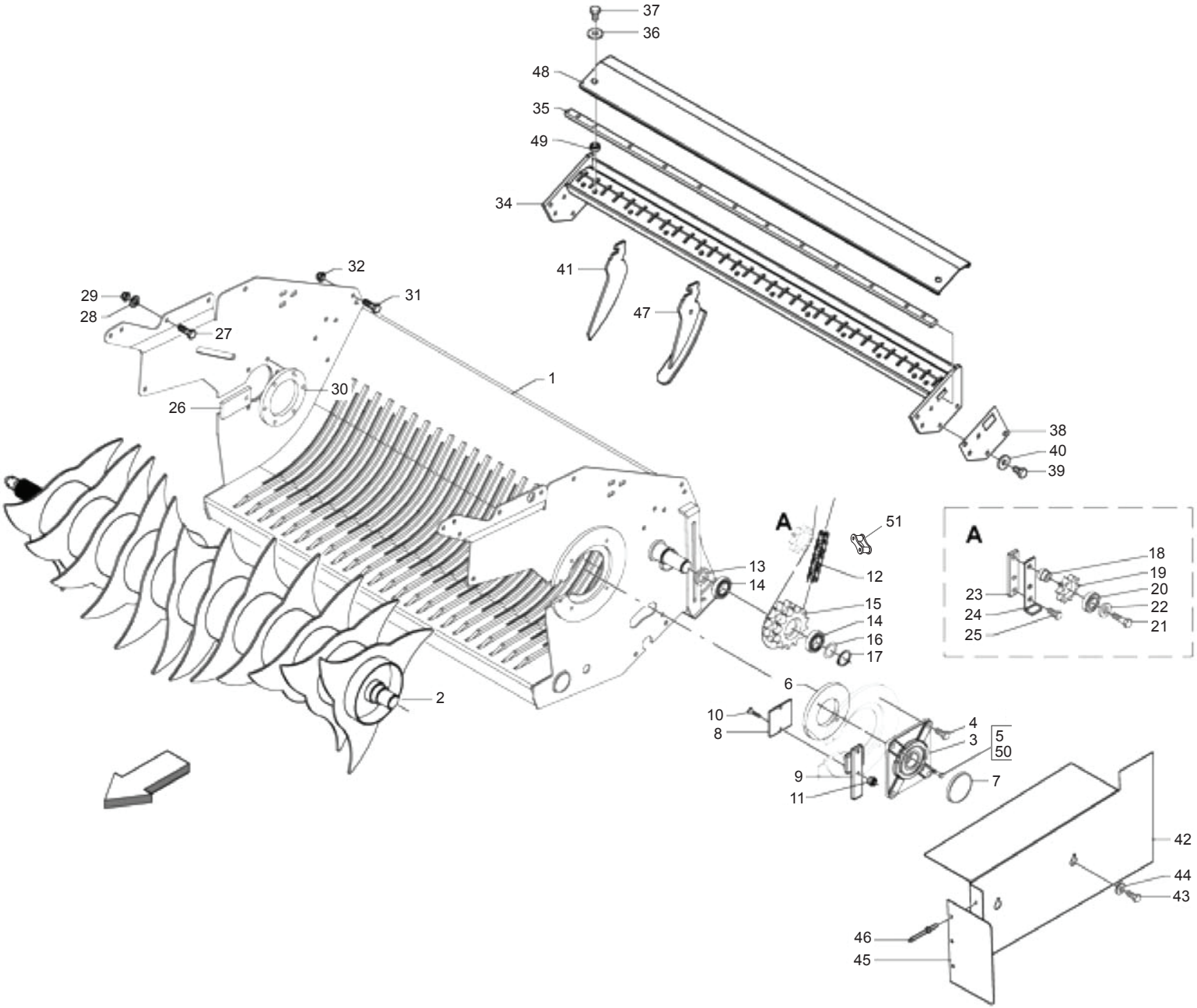

MASCHIO

cod. F07022338

ROTOR: TELAIO + ROTORE
ROTOR: FRAME + ROTOR

TAV_085

Pos.	Cod.	Descrizione	Description	Description	Benennung	Descripcion
1	B07SP0290R	TELAIO ROTOR	ROTOR FRAME			BASTIDOR DEL ROTOR
2	B07SP0289R	ROTORE CON DISCHI	ROTOR BLADES			ROTOR CON DISCOS
3	B02700153R	SUPPORTO FLANGIATO	FLANGED SUPPORT	SUPPORT POUR ROTOR CUT	FLANSCHLAGER	SOPORTE CON BRIDA
4	F01020510R	VITE M12X1,75X30 U5739 8.8ZN	SCR. M12X1,75X30 U5739 8.8ZN	VIS M12X1,75X30 U5739 8.8ZN	SCHRAU.M12X1,75X30 U5739 8.8ZN	TORNILLO M12X1,75X30 U5739
5	F01410051R	ROS.M8 8,4X 17X1,6 U6592 ZN	WASHER M8 8,4X17X1,6 U6592 ZN	RONDELLE M8 8,4X17X1,6 ZN	SCHEIBE M8 8,4X17X1,6 U6592 ZN	ARAND.M8 8,4X 17X1,6 U6592 ZN
6	B01300714R	CONTROFLANGIA SUPP. FOLLE	IDLE SUPPORT COUNTERFLANGE	CONTRE-BRISE SUPPORT FOU	GEGENFLANSCH	CONTRA-BRIDA SOP. LOCO
7	B04400001R	CAP. CHIUSO 110X10 TIPO C	CAP	COUVERCLE	GESCHLOSSENE KAPPE	CAP. CERRADO 110X10 TIPO C
8	B0C003746R	COMPENSO FESSURA SX	LEFT SLOT COMPENSATION	EPAISSEURE FENTE GAUCHE	LINKER SPALTENAUSGLEICH	COMPENSADO FISURA IZQ
9	B07SP0046R	FERMO COMPENSO LATO SX	LEFT SIDE SHIM LOCK	ARRET EPAISSEUR COTE GAUCHE	VERDICHTUNG BLOCK	TOPE COMPENSADO LADO IZQ
10	F01030060R	VITE M8X1,25X35 U5933 10.9ZD	SCREW M8X1,25X35 U5933 10.9ZD	VIS M8X1,25X35 U5933 10.9ZD	SCHRA.M8X1,25X35 U5933 10.9ZD	TORNILLO M8X1,25X35 U5933 10.9
11	B00920208R	DADO AUTOB.BASSO M 8-5S D985	NUT M8X1 D985 8ZN	ECROU	SELBSTSICHERNDE MUTTER M8-5S	TUERCA M8X1 D985 8
12	B030E0017R	GIUNTO MOLL N26 ISO 16 B-1	SPRING JOINT N.26 ISO 16 B-1	JOINT RESSORT	KETTENFEDER	JUNTA DE MUELL N26 ISO 16 B-1
13	B01330957R	DISTANZIALE 35-48-7	SPACER	ENTRETOISE	DISTANZSTUECK 35X48X7	DISTANCIADOR 35-48-7
14	B02043514R	CUSC.. 6007-2RS CAT.B-ST004	BEARING	ROULEMENT	LAGER 6007-2RS	COJIN. 6007-2RS CAT.B-ST00
15	B03400005R	CORONA Z-12 12 1	SPROCKET Z-12 12 1	COURONNE	KRANZ Z-12 12 1	CORONA Z-12 12 1
16	B01534416R	SPES. 35 43 1 ZINCATO	SHIM	ENTRETOISE	AUSGLEICHSCHEIBE 35X43X1	ESPES. 35 43 1 CINCADO
17	B01700035R	ANEL. D ARR. ALB. 35-E UNI3653	SEEGER RING	BAGUE SEEGER	SEEGERRING 35-E	ANIL. DE PARAD. RB. 35-E UNI3
18	B01300302R	PERNO GALOPPINO	PIN	TOURILLON	BOLZEN FUER KETTENZAHNRAD	PERNO DE POLEA
19	B03400274R	CORONA Z10-1 ISO F52 TRATT	SPROCKET Z=10-1	ENGRANAGE SPECIAL TRAITE	ZAHNKRANZ Z=10-1	CORONA Z10-1 ISO F52 TRA
20	F04010170R	CUSC.D25 D52 B15 6205 2RS EX	BEARING D25 D52 B15 6205 2RS	ROULEMENT 6205 2RS	LAGER 6205 2RS	COJIN.D25 D52 B15 6205 2RS EX
21	F01020160R	VITE M12X1,75X60 U5737 8.8ZN	SCR. M12X1,75X60 U5737 8.8ZN	VIS M12X1,75X60 U5737 8.8 ZN	SCHRA.M12X1,75X60 U5737 8.8 ZN	TORNILLO M12X1,75X60 U5737 8.
22	B01518412R	RALLA 12 38 5	FIFTH WHEEL	BUTEE	SCHEIBE	RANGUA 12 38 5
23	B0C002390R	FERMO	LOCK	ARRET	ARRETIERUNG	TOPE
24	B0C002389R	REGISTRO	REGISTER	VANNE	STELLVORRICHTUNG	REGISTRO
25	F01020510R	VITE M12X1,75X30 U5739 8.8ZN	SCR. M12X1,75X30 U5739 8.8ZN	VIS M12X1,75X30 U5739 8.8ZN	SCHRAU.M12X1,75X30 U5739 8.8ZN	TORNILLO M12X1,75X30 U5739
26	B0C003748R	COMPENSO FESSURA DX	RIGHT SLOT COMPENSATION	EPAISSEUR FENTE DROITE	RECHTER SPALTENAUSGLEICH	COMPENSADO FISURA DER
27	F01020510R	VITE M12X1,75X30 U5739 8.8ZN	SCR. M12X1,75X30 U5739 8.8ZN	VIS M12X1,75X30 U5739 8.8ZN	SCHRAU.M12X1,75X30 U5739 8.8ZN	TORNILLO M12X1,75X30 U5739
28	F01410076R	ROS.M12 13X 24X2,5 U6592 ZN	WASHER 12 13X 24X2,5 U6592 ZN	RONDEL. M12 13X24X2,5 U6592 ZN	SCHEIBE M12 13X24X2,5 U6592 ZN	ARAND.M12 13X 24X2,5 U6592 ZN
29	F01230213R	DADO M12X1,75 U7474 CL8 ZN	NUT M12X1,75 U7474 6SZN	ECROU AUTOBL. M12	SELBSTSPERR.MUTTER M12	TUERCA M12X1,75 U7474 CL8 ZN
30	B01300509R	CONTROFLANGIA SUPP. MOT.	MOTOR SUPPORT COUNTERFLANGE	CONTRE-FLASQUE SUPPORT MOTEUR	MOTORHALTERGEGENFLANSCH	CONTRA-BRIDA ADIC. MOT.
31	F01020514R	VITE M12X1,75X40 U5739 8.8ZN	SCR. M12X1,75X40 U5739 8.8ZN	VIS M12X1,75X40 U5739 8.8ZN	SCHRA. M12X1,75X40 U5739 8.8ZN	TORNILLO M12X1,75X40 U5739 8.
32	F01230213R	DADO M12X1,75 U7474 CL8 ZN	NUT M12X1,75 U7474 6SZN	ECROU AUTOBL. M12	SELBSTSPERR.MUTTER M12	TUERCA M12X1,75 U7474 CL8 ZN
34	B07S01801R	TRAVERSA TOPCUT NEW	CROSS BAR	TRAVERSE TOPCUT NEW	QUERTRAEGER	TRAVESA O TOPCUT NEW
35	B0C005018R	ASTA DI SOSTEGNO	SUPPORT ROD	BARRE DE SUPPORT	STUETZSTANGE	BARRA DE SOST N
36	F01410062R	ROS.M10 10,5X 18X 2 U6592 ZN	WASHER M10 10,5X 18X 2 U6592	RONDELLE M10 10,5X18X2 ZN	DICHTUNGSRING M10 10,5X18X2 ZN	ARAND.M10 10,5X 18X 2 U6592 ZN
37	F01020476R	VITE M10X1,5X30 U5739 8.8ZN	SCR. M10X1,5X30 U5739 8.8ZN	VIS M10X1,5X30 U5739 8.8 ZN	SCHRAUBE M10X1,5X30U5739 8.8ZN	TORNILLO M10X1,5X30 U5739 8.8
38	B0C003616R	SPES. TRAVERSA RASCHIATORI	SCRAPER CROSS MEMBER SHIM	EPAISSEUR TRAVERSE RACLEUR	ABSTREIFER TRAEGER DISTANZSCHE	ESPES. TRAVESA O RASCADORES
39	F01020508R	VITE M12X1,75X25 U5739 8.8ZN	SCR. M12X1,75X25 U5739 8.8ZN	VIS M12X1,75X25 U5739 8.8 ZN	SCHRAUBE M12X1,75X25U57398.8ZN	TORNILLO M12X1,75X25 U5739
40	B01515797R	RALLA 13 25 5	FIFTH WHEEL	BUTEE	SCHEIBE	RANGUA 13 25 5
41	B0C003977R	RASCHIATORE SMONTABILE	DETACHABLE SCRAPER	RACLEUR DEMONTABLE	DEMONTIERBARER ABSTREIFER	RASCADOR DESMONTABLE
42	B0C005268R	CARTER CUT	CUT GUARD	CARTER CUT	CARTER CUT	C RTER CUT
43	F01020436R	VITE M8X1,25X20 U5739 8.8ZN	SCR. M8X1,25X20 U5739 8.8ZN	VIS M8X1,25X 20 U5739 8.8 ZN	SCHRAUBE M8X1,25X20U5739 8.8ZN	TORNILLO M8X1,25X20 U5739 8.8
44	F01410051R	ROS.M8 8,4X 17X1,6 U6592 ZN	WASHER M8 8,4X17X1,6 U6592 ZN	RONDELLE M8 8,4X17X1,6 ZN	SCHEIBE M8 8,4X17X1,6 U6592 ZN	ARAND.M8 8,4X 17X1,6 U6592 ZN
45	B0C004239R	PROLUNGA CARTER CUT	CUT GUARD EXTENSION	RALLONGE CARTER CUT	VERLAENGERUNG CARTER CUT	ALARGADOR C RTER CUT
46	F02250111R	RIVETTO STR. 4 X 6 U9200A AL	RIVET 4 X6	RIVET 4 X6	KUPFERNIET 4 X6	REMACHE EXTR. 4 X 6 U9200A A
47	B07SP0298R	RASCHIATORE E PATTINO HTR	SCRAPER			RASCADOR Y PAT N HTR
48	B0C3P0153R	PROTEZIONI RASCHIATORI	PROTECTION	PROTECTION	SCHEUTZ ABSTERIFER	PROTECCIONES RASPADORES
49	B013C0126R	DISTANZIALE	SPACER	ENTRETOISE	DISTANZSTUECK	DISTANCIADOR
50	B00190850R	VITE M 8X1,25X 50 U5737 8.8ZN	SCREW	VIS	VERZINKTE SCHRAUBE	TORNILLO M 8X1,25X 50 U5737 8
51	B030E1039R	CATENA RULLI ISO 16 B-1 39M	ROLLER CHAIN ISO16 B-1 39M	CHAINE ROULEAUX	WALZENKETTE ISO 16 B-1 39M	CADENA DE LOS RODILLOS ISO 16

TAV_090

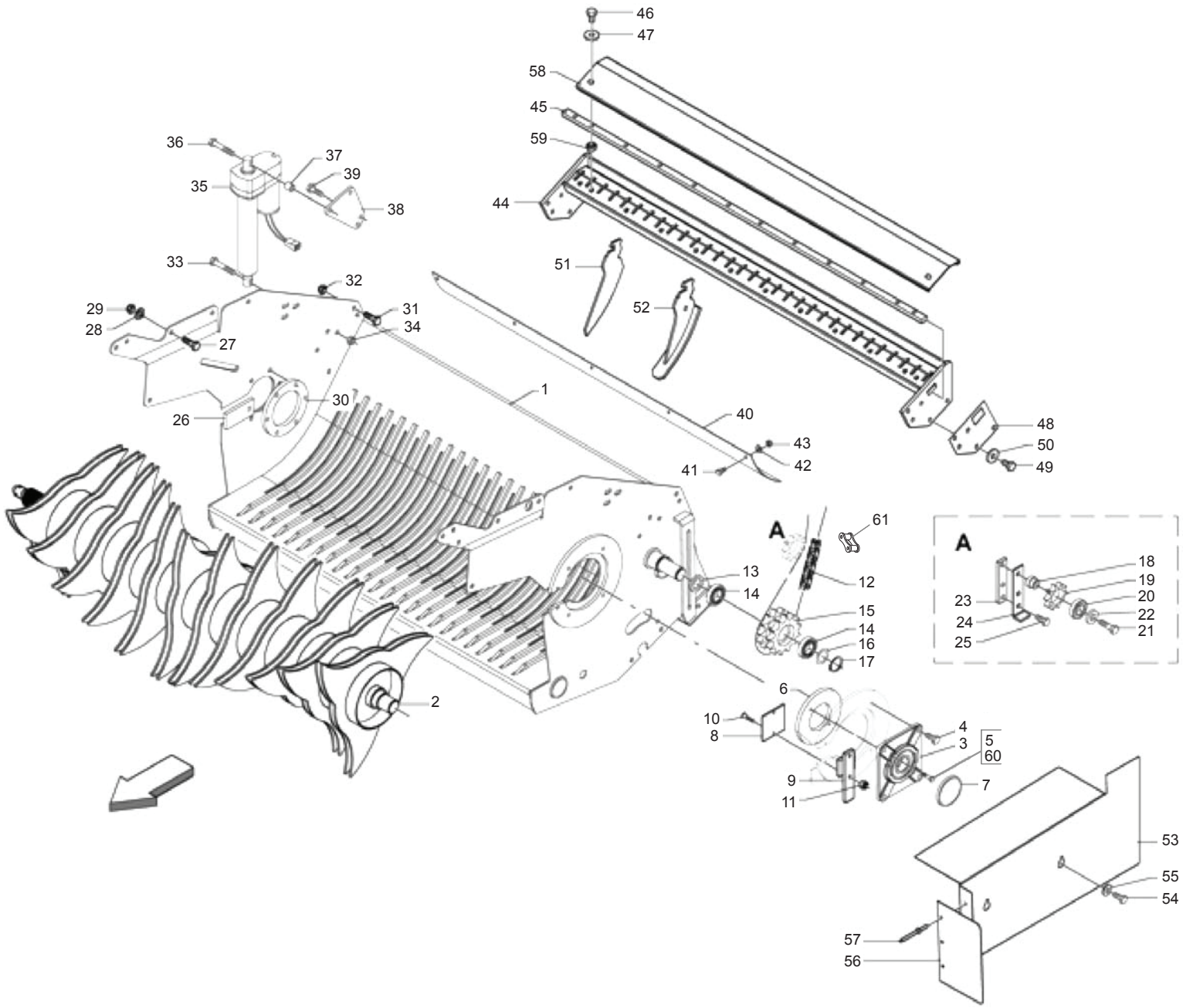

MASCHIO

cod. F07022338

CUT 13: TELAIO + ROTORE
CU 13: FRAME + ROTOR

TAV_090

Pos.	Cod.	Descrizione	Description	Description	Benennung	Descripcion
1	B07S01791R	TELAIO TOPCUT NEW	NEW TOPCUT FRAME			BASTIDOR TOPCUT NEW
2	B07S01944R	ROT. CON DISCHI A 3 PUNTE HTC	ROTOR WITH 3 POINTED DISCS HTC	ROTOR AVEC DISQUES A 3 POINTS	ROTOR MIT SCHEIBEN	ROLL. CON DISCOS DE 3 PUNTAS H
3	B02700153R	SUPPORTO FLANGIATO	FLANGED SUPPORT	SUPPORT POUR ROTOR CUT	FLANSCHLAGER	SOPORTE CON BRIDA
4	F01020510R	VITE M12X1,75X30 U5739 8.8ZN	SCR. M12X1,75X30 U5739 8.8ZN	VIS M12X1,75X30 U5739 8.8ZN	SCHRAU.M12X1,75X30 U5739 8.8ZN	TORNILLO M12X1,75X30 U5739
5	B00190850R	VITE M 8X1,25X 50 U5737 8.8ZN	SCREW	VIS	VERZINKTE SCHRAUBE	TORNILLO M 8X1,25X 50 U5737 8
6	B01300714R	CONTROFLANGIA SUPP. FOLLE	IDLE SUPPORT COUNTERFLANGE	CONTRE-BRISE SUPPORT FOU	GEGENFLANSCH	CONTRA-BRIDA SOP. LOCO
7	B04400001R	CAP. CHIUSO 110X10 TIPO C	CAP	COUVERCLE	GESCHLOSSENE KAPPE	CAP. CERRADO 110X10 TIPO C
8	B0C003746R	COMPENSO FESSURA SX	LEFT SLOT COMPENSATION	EPAISSEURE FENTE GAUCHE	LINKER SPALTENAUSGLEICH	COMPENSADO FISURA IZQ
9	B07SP0046R	FERMO COMPENSO LATO SX	LEFT SIDE SHIM LOCK	ARRET EPAISSEUR COTE GAUCHE	VERDICHTUNG BLOCK	TOPE COMPENSADO LADO IZQ
10	F01030060R	VITE M8X1,25X35 U5933 10.9ZD	SCREW M8X1,25X35 U5933 10.9ZD	VIS M8X1,25X35 U5933 10.9ZD	SCHRA.M8X1,25X35 U5933 10.9ZD	TORNILLO M8X1,25X35 U5933 10.9
11	B00920208R	DADO AUTOB.BASSO M 8-5S D985	NUT M8X1 D985 8ZN	ECROU	SELBSTSICHERNDE MUTTER M8-5S	TUERCA M8X1 D985 8
12	B030E0017R	GIUNTO MOLL N26 ISO 16 B-1	SPRING JOINT N.26 ISO 16 B-1	JOINT RESSORT	KETTENFEDER	JUNTA DE MUELL N26 ISO 16 B-1
13	B01330957R	DISTANZIALE 35-48-7	SPACER	ENTRETOISE	DISTANZSTUECK 35X48X7	DISTANCIADOR 35-48-7
14	B02043514R	CUSC.. 6007-2RS CAT.B-ST004	BEARING	ROULEMENT	LAGER 6007-2RS	COJIN. 6007-2RS CAT.B-ST00
15	B03400005R	CORONA Z-12 12 1	SPROCKET Z-12 12 1	COURONNE	KRANZ Z-12 12 1	CORONA Z-12 12 1
16	B01534416R	SPES. 35 43 1 ZINCATO	SHIM	ENTRETOISE	AUSGLEICHSCHEIBE 35X43X1	ESPES. 35 43 1 CINCADO
17	B01700035R	ANEL. D ARR. ALB. 35-E UNI3653	SEEGER RING	BAGUE SEEGER	SEEGERRING 35-E	ANIL. DE PARAD. RB. 35-E UNI3
18	B01300302R	PERNO GALOPPINO	PIN	TOURILLON	BOLZEN FUER KETTENZAHNRAD	PERNO DE POLEA
19	B03400274R	CORONA Z10-1 ISO F52 TRATT	SPROCKET Z=10-1	ENGRANAGE SPECIAL TRAITE	ZAHNKRANZ Z=10-1	CORONA Z10-1 ISO F52 TRA
20	F04010170R	CUSC.D25 D52 B15 6205 2RS EX	BEARING D25 D52 B15 6205 2RS	ROULEMENT 6205 2RS	LAGER 6205 2RS	COJIN.D25 D52 B15 6205 2RS EX
21	F01020160R	VITE M12X1,75X60 U5737 8.8ZN	SCR. M12X1,75X60 U5737 8.8ZN	VIS M12X1,75X60 U5737 8.8 ZN	SCHRA.M12X1,75X60 U5737 8.8 ZN	TORNILLO M12X1,75X60 U5737 8.
22	B01518412R	RALLA 12 38 5	FIFTH WHEEL	BUTEE	SCHEIBE	RANGUA 12 38 5
23	B0C002390R	FERMO	LOCK	ARRET	ARRETIERUNG	TOPE
24	B0C002389R	REGISTRO	REGISTER	VANNE	STELLVORRICHTUNG	REGISTRO
25	F01020510R	VITE M12X1,75X30 U5739 8.8ZN	SCR. M12X1,75X30 U5739 8.8ZN	VIS M12X1,75X30 U5739 8.8ZN	SCHRAU.M12X1,75X30 U5739 8.8ZN	TORNILLO M12X1,75X30 U5739
26	B0C003748R	COMPENSO FESSURA DX	RIGHT SLOT COMPENSATION	EPAISSEUR FENTE DROITE	RECHTER SPALTENAUSGLEICH	COMPENSADO FISURA DER
27	F01020510R	VITE M12X1,75X30 U5739 8.8ZN	SCR. M12X1,75X30 U5739 8.8ZN	VIS M12X1,75X30 U5739 8.8ZN	SCHRAU.M12X1,75X30 U5739 8.8ZN	TORNILLO M12X1,75X30 U5739
28	F01410076R	ROS.M12 13X 24X2,5 U6592 ZN	WASHER 12 13X 24X2,5 U6592 ZN	RONDEL. M12 13X24X2,5 U6592 ZN	SCHEIBE M12 13X24X2,5 U6592 ZN	ARAND.M12 13X 24X2,5 U6592 ZN
29	F01230213R	DADO M12X1,75 U7474 CL8 ZN	NUT M12X1,75 U7474 6SZN	ECROU AUTOBL. M12	SELBSTSPERR.MUTTER M12	TUERCA M12X1,75 U7474 CL8 ZN
30	B01300509R	CONTROFLANGIA SUPP. MOT.	MOTOR SUPPORT COUNTERFLANGE	CONTRE-FLASQUE SUPPORT MOTEUR	MOTORHALTERGEGENFLANSCH	CONTRA-BRIDA ADIC. MOT.
31	F01020514R	VITE M12X1,75X40 U5739 8.8ZN	SCR. M12X1,75X40 U5739 8.8ZN	VIS M12X1,75X40 U5739 8.8ZN	SCHRA. M12X1,75X40 U5739 8.8ZN	TORNILLO M12X1,75X40 U5739 8.
32	F01230213R	DADO M12X1,75 U7474 CL8 ZN	NUT M12X1,75 U7474 6SZN	ECROU AUTOBL. M12	SELBSTSPERR.MUTTER M12	TUERCA M12X1,75 U7474 CL8 ZN
33	F01020519R	VITE M12X1,75X 60 U5739 8.8ZN	SCREW M12X1,75X 60 U5739 8.8ZN			TORNILLO M12X1,75X 60 U5739 8
34	F01230213R	DADO M12X1,75 U7474 CL8 ZN	NUT M12X1,75 U7474 6SZN	ECROU AUTOBL. M12	SELBSTSPERR.MUTTER M12	TUERCA M12X1,75 U7474 CL8 ZN
35	B0E000064R	ATTUATORE COLTELLI	KNIVES ACTUATOR D12 21B5 04	ACTIONNEUR	E-MOTOR WARNER D12 21B5 04	ACTUADOR DE CUCHILLAS
36	F01020524R	VITE M12X1,75X90 U5739 8.8ZN	SCR. M12X1,75X90 U5739 8.8ZN			TORNILLO M12X1,75X90 U5739 8
37	B01300746R	DISTANZIALE 12,5X21,3X15	SPACER			DISTANCIADOR 12,5X21,3X15
38	B07S01203R	ATTACCO ATTUATORE	ACTUATOR ATTACHMENT	ATTELAGE ACTIONNEUR	E-MOTOR HALTERUNG	CONEXI N DEL ACTUADOR
39	F01040201R	VITE M12X1,75X 35 8.8 U5931 Z	SCREW M12X1,75X 35 8.8 U5931 Z			TORNILLO M12X1,75X 35 8.8 U593
40	B07V00092R	PROT. MOLLE COLT.	KNIFE SPRING PROTECTION	PROTECTION RESSORTS COUTEAUX	MESSERFEDERSCHUTZ	PROT. MUELLE CUCH.
41	F01020436R	VITE M8X1,25X20 U5739 8.8ZN	SCR. M8X1,25X20 U5739 8.8ZN	VIS M8X1,25X 20 U5739 8.8 ZN	SCHRAUBE M8X1,25X20U5739 8.8ZN	TORNILLO M8X1,25X20 U5739 8.8
42	F01420049R	ROS.M8 8,4X 32X 2 U6593 ZN	WASHER M8 8,4X32X2 U6593 ZN	RONDELLA M8 8,4X32X2 U6593 ZN	SCHEIBE M8 8,4X32X2 U6593 ZN	ARAND.M8 8,4X 32X 2 U6593 ZN
43	B00920208R	DADO AUTOB.BASSO M 8-5S D985	NUT M8X1 D985 8ZN	ECROU	SELBSTSICHERNDE MUTTER M8-5S	TUERCA M8X1 D985 8
44	B07S01801R	TRAVERSA TOPCUT NEW	CROSS BAR	TRAVERSE TOPCUT NEW	QUERTRAEGER	TRAVESA O TOPCUT NEW
45	B0C005018R	ASTA DI SOSTEGNO	SUPPORT ROD	BARRE DE SUPPORT	STUETZSTANGE	BARRA DE SOST N
46	F01020476R	VITE M10X1,5X30 U5739 8.8ZN	SCR. M10X1,5X30 U5739 8.8ZN	VIS M10X1,5X30 U5739 8.8 ZN	SCHRAUBE M10X1,5X30U5739 8.8ZN	TORNILLO M10X1,5X30 U5739 8.8
47	F01410062R	ROS.M10 10,5X 18X 2 U6592 ZN	WASHER M10 10,5X 18X 2 U6592	RONDELLE M10 10,5X18X2 ZN	DICHTUNGSRING M10 10,5X18X2 ZN	ARAND.M10 10,5X 18X 2 U6592 ZN
48	B0C003616R	SPES. TRAVERSA RASCHIATORI	SCRAPER CROSS MEMBER SHIM	EPAISSEUR TRAVERSE RACLEUR	ABSTREIFER TRAEGER DISTANZSCHE	ESPES. TRAVESA O RASCADORES
49	F01020508R	VITE M12X1,75X25 U5739 8.8ZN	SCR. M12X1,75X25 U5739 8.8ZN	VIS M12X1,75X25 U5739 8.8 ZN	SCHRAUBE M12X1,75X25U57398.8ZN	TORNILLO M12X1,75X25 U5739
50	B01515797R	RALLA 13 25 5	FIFTH WHEEL	BUTEE	SCHEIBE	RANGUA 13 25 5
51	B0C6P0263R	RASCHIATORE	DETACHABLE SCRAPER	RACLEUR DEMONTABLE	DEMONTIERBARER ABSTREIFER	RASPADOR
52	B07SP0241R	RASCHIATORE E PATTINO	SCRAPER AND SLIDING BLOCK	RACLEUR ET PATIN	ABSTREIFER UND GLEITSCHUH	RASCADOR Y PAT N
53	B0C005268R	CARTER CUT	CUT GUARD	CARTER CUT	CARTER CUT	C RTER CUT
54	F01020436R	VITE M8X1,25X20 U5739 8.8ZN	SCR. M8X1,25X20 U5739 8.8ZN	VIS M8X1,25X 20 U5739 8.8 ZN	SCHRAUBE M8X1,25X20U5739 8.8ZN	TORNILLO M8X1,25X20 U5739 8.8
55	F01410051R	ROS.M8 8,4X 17X1,6 U6592 ZN	WASHER M8 8,4X17X1,6 U6592 ZN	RONDELLE M8 8,4X17X1,6 ZN	SCHEIBE M8 8,4X17X1,6 U6592 ZN	ARAND.M8 8,4X 17X1,6 U6592 ZN
56	B0C004239R	PROLUNGA CARTER CUT	CUT GUARD EXTENSION	RALLONGE CARTER CUT	VERLAENGERUNG CARTER CUT	ALARGADOR C RTER CUT
57	F02250111R	RIVETTO STR. 4 X 6 U9200A AL	RIVET 4 X6	RIVET 4 X6	KUPFERNIET 4 X6	REMACHE EXTR. 4 X 6 U9200A A

TAV_090

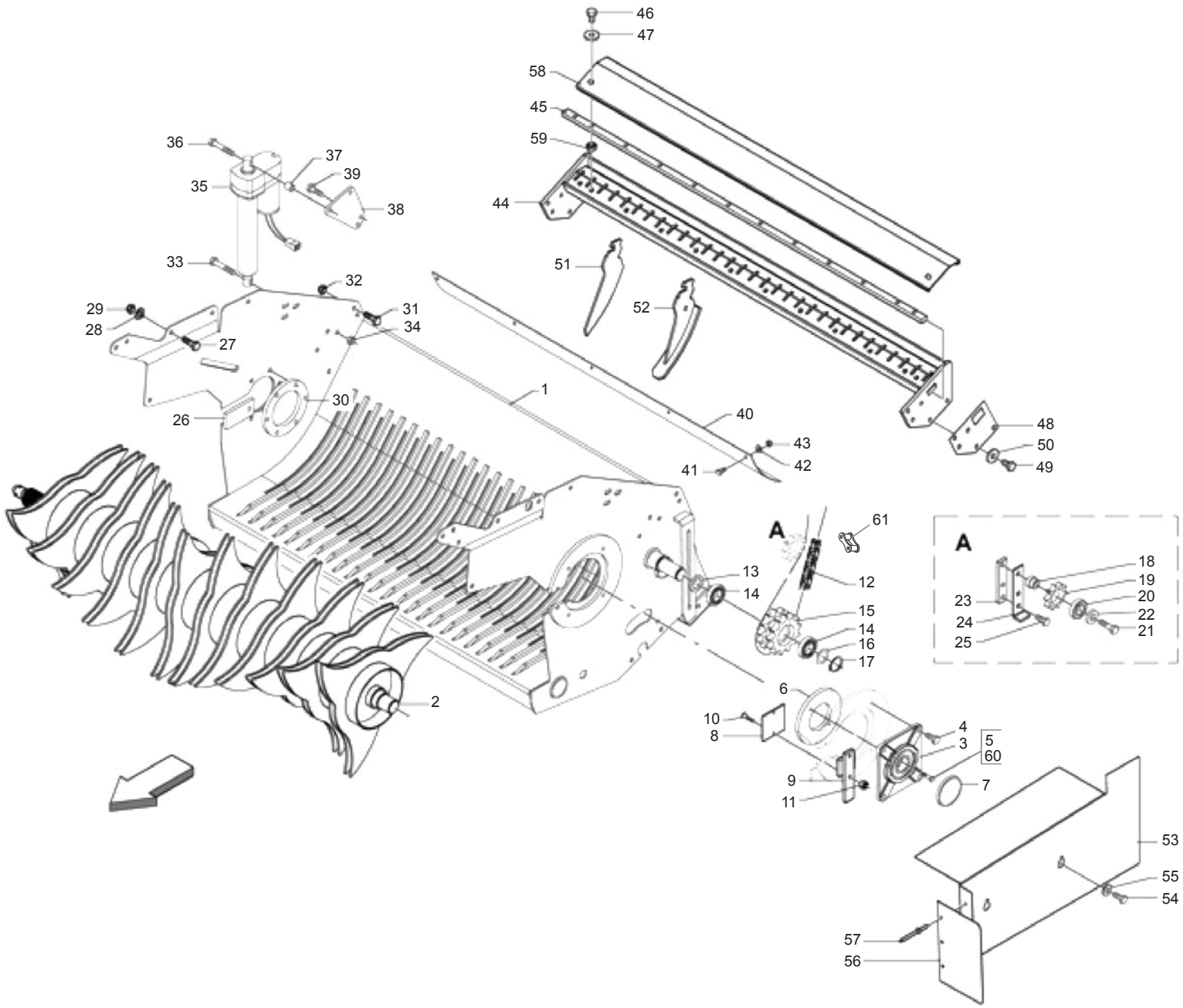

MASCHIO

cod. F07022338

CUT 13: TELAIO + ROTORE
CU 13: FRAME + ROTOR

Pos.	Cod.	Descrizione	Description	Description	Benennung	Descripcion
58	B0C3P0153R	PROTEZIONI RASCHIATORI	PROTECTION	PROTECTION	SCHEUTZ ABSTERIFER	PROTECCIONES RASPADORES
59	B013C0126R	DISTANZIALE	SPACER	ENTRETOISE	DISTANZSTUECK	DISTANCIADOR
60	F01410051R	ROS.M8 8,4X 17X1,6 U6592 ZN	WASHER M8 8,4X17X1,6 U6592 ZN	RONDELLE M8 8,4X17X1,6 ZN	SCHEIBE M8 8,4X17X1,6 U6592 ZN	ARAND.M8 8,4X 17X1,6 U6592 ZN
61	B030E1039R	CATENA RULLI ISO 16 B-1 39M	ROLLER CHAIN ISO16 B-1 39M	CHAINE ROULEAUX	WALZENKETTE ISO 16 B-1 39M	CADENA DE LOS RODILLOS ISO 16

TAV_095

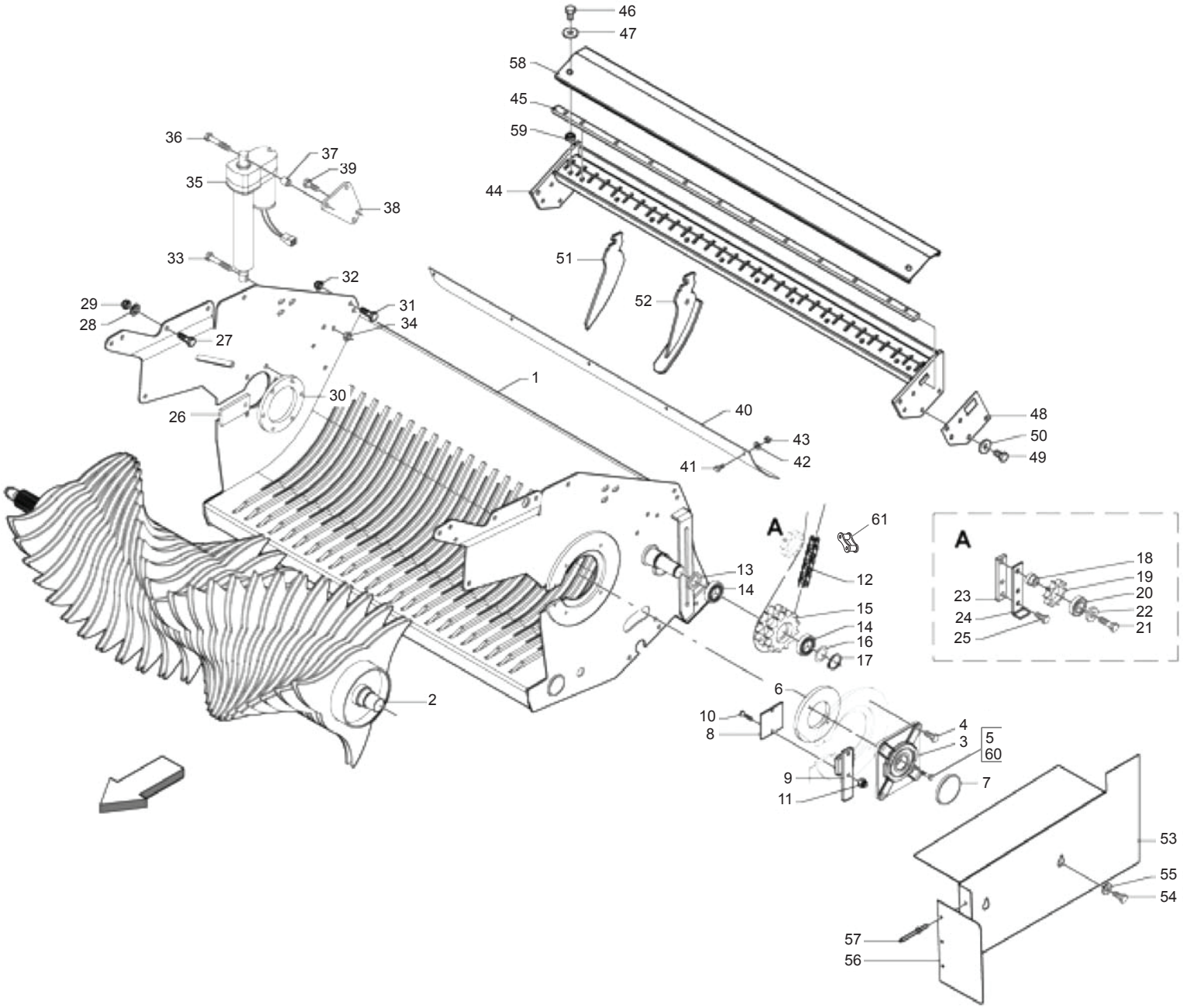

MASCHIO

cod. F07022338

CUT 25: TELAIO + ROTORE
CUT 25: FRAME + ROTOR

TAV_095

Pos.	Cod.	Descrizione	Description	Description	Benennung	Descripcion
1	B07S01792R	TELAIO ULTRACUT NEW	NEW ULTRACUT FRAME	CHASSIS ULTRACUT	NEUER ULTRACUT RAHMEN	BASTIDOR ULTRACUT NEW
2	B07S01127R	ROT. ULTRACUT	ULTRACUT ROTOR	ROTOR ULTRACUT	ULTRACUT ROTOR	ROLL. ULTRACUT
3	B02700153R	SUPPORTO FLANGIATO	FLANGED SUPPORT	SUPPORT POUR ROTOR CUT	FLANSCHLAGER	SOPORTE CON BRIDA
4	F01020510R	VITE M12X1,75X30 U5739 8.8ZN	SCR. M12X1,75X30 U5739 8.8ZN	VIS M12X1,75X30 U5739 8.8ZN	SCHRAU.M12X1,75X30 U5739 8.8ZN	TORNILLO M12X1,75X30 U5739
5	F01410051R	ROS.M8 8,4X 17X1,6 U6592 ZN	WASHER M8 8,4X17X1,6 U6592 ZN	RONDELLE M8 8,4X17X1,6 ZN	SCHEIBE M8 8,4X17X1,6 U6592 ZN	ARAND.M8 8,4X 17X1,6 U6592 ZN
6	B01300714R	CONTROFLANGIA SUPP. FOLLE	IDLE SUPPORT COUNTERFLANGE	CONTRE-BRISE SUPPORT FOU	GEGENFLANSCH	CONTRA-BRIDA SOP. LOCO
7	B04400001R	CAP. CHIUSO 110X10 TIPO C	CAP	COUVERCLE	GESCHLOSSENE KAPPE	CAP. CERRADO 110X10 TIPO C
8	B0C003746R	COMPENSO FESSURA SX	LEFT SLOT COMPENSATION	EPAISSEURE FENTE GAUCHE	LINKER SPALTENAUSGLEICH	COMPENSADO FISURA IZQ
9	B07SP0046R	FERMO COMPENSO LATO SX	LEFT SIDE SHIM LOCK	ARRET EPAISSEUR COTE GAUCHE	VERDICHTUNG BLOCK	TOPE COMPENSADO LADO IZQ
10	F01030060R	VITE M8X1,25X35 U5933 10.9ZD	SCREW M8X1,25X35 U5933 10.9ZD	VIS M8X1,25X35 U5933 10.9ZD	SCHRA.M8X1,25X35 U5933 10.9ZD	TORNILLO M8X1,25X35 U5933 10.9
11	B00920208R	DADO AUTOB.BASSO M 8-5S D985	NUT M8X1 D985 8ZN	ECROU	SELBSTSICHERNDE MUTTER M8-5S	TUERCA M8X1 D985 8
12	B030E1039R	CATENA RULLI ISO 16 B-1 39M	ROLLER CHAIN ISO16 B-1 39M	CHAINE ROULEAUX	WALZENKETTE ISO 16 B-1 39M	CADENA DE LOS RODILLOS ISO 16
13	B01330957R	DISTANZIALE 35-48-7	SPACER	ENTRETOISE	DISTANZSTUECK 35X48X7	DISTANCIADOR 35-48-7
14	B02043514R	CUSC.. 6007-2RS CAT.B-ST004	BEARING	ROULEMENT	LAGER 6007-2RS	COJIN. 6007-2RS CAT.B-ST00
15	B03400005R	CORONA Z-12 12 1	SPROCKET Z-12 12 1	COURONNE	KRANZ Z-12 12 1	CORONA Z-12 12 1
16	B01534416R	SPES. 35 43 1 ZINCATO	SHIM	ENTRETOISE	AUSGLEICHSCHEIBE 35X43X1	ESPES. 35 43 1 CINCADO
17	B01700035R	ANEL. D ARR. ALB. 35-E UNI3653	SEEGER RING	BAGUE SEEGER	SEEGERRING 35-E	ANIL. DE PARAD. RB. 35-E UNI3
18	B01300302R	PERNO GALOPPINO	PIN	TOURILLON	BOLZEN FUER KETTENZAHNRAD	PERNO DE POLEA
19	B03400274R	CORONA Z10-1 ISO F52 TRATT	SPROCKET Z=10-1	ENGRANAGE SPECIAL TRAITE	ZAHNKRANZ Z=10-1	CORONA Z10-1 ISO F52 TRA
20	F04010170R	CUSC.D25 D52 B15 6205 2RS EX	BEARING D25 D52 B15 6205 2RS	ROULEMENT 6205 2RS	LAGER 6205 2RS	COJIN.D25 D52 B15 6205 2RS EX
21	F01020160R	VITE M12X1,75X60 U5737 8.8ZN	SCR. M12X1,75X60 U5737 8.8ZN	VIS M12X1,75X60 U5737 8.8 ZN	SCHRA.M12X1,75X60 U5737 8.8 ZN	TORNILLO M12X1,75X60 U5737 8.
22	B01518412R	RALLA 12 38 5	FIFTH WHEEL	BUTEE	SCHEIBE	RANGUA 12 38 5
23	B0C002390R	FERMO	LOCK	ARRET	ARRETIERUNG	TOPE
24	B0C002389R	REGISTRO	REGISTER	VANNE	STELLVORRICHTUNG	REGISTRO
25	F01020510R	VITE M12X1,75X30 U5739 8.8ZN	SCR. M12X1,75X30 U5739 8.8ZN	VIS M12X1,75X30 U5739 8.8ZN	SCHRAU.M12X1,75X30 U5739 8.8ZN	TORNILLO M12X1,75X30 U5739
26	B0C003748R	COMPENSO FESSURA DX	RIGHT SLOT COMPENSATION	EPAISSEUR FENTE DROITE	RECHTER SPALTENAUSGLEICH	COMPENSADO FISURA DER
27	F01020510R	VITE M12X1,75X30 U5739 8.8ZN	SCR. M12X1,75X30 U5739 8.8ZN	VIS M12X1,75X30 U5739 8.8ZN	SCHRAU.M12X1,75X30 U5739 8.8ZN	TORNILLO M12X1,75X30 U5739
28	F01410076R	ROS.M12 13X 24X2,5 U6592 ZN	WASHER 12 13X 24X2,5 U6592 ZN	RONDEL. M12 13X24X2,5 U6592 ZN	SCHEIBE M12 13X24X2,5 U6592 ZN	ARAND.M12 13X 24X2,5 U6592 ZN
29	F01230213R	DADO M12X1,75 U7474 CL8 ZN	NUT M12X1,75 U7474 6SZN	ECROU AUTOBL. M12	SELBSTSPERR.MUTTER M12	TUERCA M12X1,75 U7474 CL8 ZN
30	B01300509R	CONTROFLANGIA SUPP. MOT.	MOTOR SUPPORT COUNTERFLANGE	CONTRE-FLASQUE SUPPORT MOTEUR	MOTORHALTERGEGENFLANSCH	CONTRA-BRIDA ADIC. MOT.
31	F01020514R	VITE M12X1,75X40 U5739 8.8ZN	SCR. M12X1,75X40 U5739 8.8ZN	VIS M12X1,75X40 U5739 8.8ZN	SCHRA. M12X1,75X40 U5739 8.8ZN	TORNILLO M12X1,75X40 U5739 8.
32	F01230213R	DADO M12X1,75 U7474 CL8 ZN	NUT M12X1,75 U7474 6SZN	ECROU AUTOBL. M12	SELBSTSPERR.MUTTER M12	TUERCA M12X1,75 U7474 CL8 ZN
33	F01020519R	VITE M12X1,75X 60 U5739 8.8ZN	SCREW M12X1,75X 60 U5739 8.8ZN			TORNILLO M12X1,75X 60 U5739 8
34	F01230213R	DADO M12X1,75 U7474 CL8 ZN	NUT M12X1,75 U7474 6SZN	ECROU AUTOBL. M12	SELBSTSPERR.MUTTER M12	TUERCA M12X1,75 U7474 CL8 ZN
35	B0E000064R	ATTUATORE COLTELLI	KNIVES ACTUATOR D12 21B5 04	ACTIONNEUR	E-MOTOR WARNER D12 21B5 04	ACTUADOR DE CUCHILLAS
36	F01020524R	VITE M12X1,75X90 U5739 8.8ZN	SCR. M12X1,75X90 U5739 8.8ZN			TORNILLO M12X1,75X90 U5739 8
37	B01300746R	DISTANZIALE 12,5X21,3X15	SPACER			DISTANCIADOR 12,5X21,3X15
38	B07S01203R	ATTACCO ATTUATORE	ACTUATOR ATTACHMENT	ATTELAGE ACTIONNEUR	E-MOTOR HALTERUNG	CONEXI N DEL ACTUADOR
39	F01040201R	VITE M12X1,75X 35 8.8 U5931 Z	SCREW M12X1,75X 35 8.8 U5931 Z			TORNILLO M12X1,75X 35 8.8 U593
40	B07V00092R	PROT. MOLLE COLT.	KNIFE SPRING PROTECTION	PROTECTION RESSORTS COUTEAUX	MESSERFEDERSCHUTZ	PROT. MUELLE CUCH.
41	F01020436R	VITE M8X1,25X20 U5739 8.8ZN	SCR. M8X1,25X20 U5739 8.8ZN	VIS M8X1,25X 20 U5739 8.8 ZN	SCHRAUBE M8X1,25X20U5739 8.8ZN	TORNILLO M8X1,25X20 U5739 8.8
42	F01420048R	ROS.M8 8,4X 24X 2 U6593 ZN	WASHER M8 8,4X 24X2 U6593 ZN	RONDELLE M8 8,4X24X 2 U6593 ZN	SCHEIBEN M8 8,4X24X 2 U6593 ZN	ARAND.M8 8,4X 24X 2 U6593 ZN
43	B00920208R	DADO AUTOB.BASSO M 8-5S D985	NUT M8X1 D985 8ZN	ECROU	SELBSTSICHERNDE MUTTER M8-5S	TUERCA M8X1 D985 8
44	B07S01847R	TRAVERSA ULTRACUT HT	CROSS BAR	TRAVERSE ULTRACUT HT	QUERTRAEGER	TRAVESA O ULTRACUT HT
45	B0C003981R	TRAVERSINO	LINK STUD	PETITE TRAVERSE	STEG	TRAVESA O
46	F01020476R	VITE M10X1,5X30 U5739 8.8ZN	SCR. M10X1,5X30 U5739 8.8ZN	VIS M10X1,5X30 U5739 8.8 ZN	SCHRAUBE M10X1,5X30U5739 8.8ZN	TORNILLO M10X1,5X30 U5739 8.8
47	F01410062R	ROS.M10 10,5X 18X 2 U6592 ZN	WASHER M10 10,5X 18X 2 U6592	RONDELLE M10 10,5X18X2 ZN	DICHTUNGSRING M10 10,5X18X2 ZN	ARAND.M10 10,5X 18X 2 U6592 ZN
48	B0C003616R	SPES. TRAVERSA RASCHIATORI	SCRAPER CROSS MEMBER SHIM	EPAISSEUR TRAVERSE RACLEUR	ABSTREIFER TRAEGER DISTANZSCHE	ESPES. TRAVESA O RASCADORES
49	F01020508R	VITE M12X1,75X25 U5739 8.8ZN	SCR. M12X1,75X25 U5739 8.8ZN	VIS M12X1,75X25 U5739 8.8 ZN	SCHRAUBE M12X1,75X25U57398.8ZN	TORNILLO M12X1,75X25 U5739
50	B01515797R	RALLA 13 25 5	FIFTH WHEEL	BUTEE	SCHEIBE	RANGUA 13 25 5
51	B0C6P0263R	RASCHIATORE	DETACHABLE SCRAPER	RACLEUR DEMONTABLE	DEMONTIERBARER ABSTREIFER	RASPADOR
52	B07SP0241R	RASCHIATORE E PATTINO	SCRAPER AND SLIDING BLOCK	RACLEUR ET PATIN	ABSTREIFER UND GLEITSCHUH	RASCADOR Y PAT N
53	B0C005268R	CARTER CUT	CUT GUARD	CARTER CUT	CARTER CUT	C RTER CUT
54	F01020436R	VITE M8X1,25X20 U5739 8.8ZN	SCR. M8X1,25X20 U5739 8.8ZN	VIS M8X1,25X 20 U5739 8.8 ZN	SCHRAUBE M8X1,25X20U5739 8.8ZN	TORNILLO M8X1,25X20 U5739 8.8
55	F01410051R	ROS.M8 8,4X 17X1,6 U6592 ZN	WASHER M8 8,4X17X1,6 U6592 ZN	RONDELLE M8 8,4X17X1,6 ZN	SCHEIBE M8 8,4X17X1,6 U6592 ZN	ARAND.M8 8,4X 17X1,6 U6592 ZN
56	B0C004239R	PROLUNGA CARTER CUT	CUT GUARD EXTENSION	RALLONGE CARTER CUT	VERLAENGERUNG CARTER CUT	ALARGADOR C RTER CUT
57	F02250111R	RIVETTO STR. 4 X 6 U9200A AL	RIVET 4 X6	RIVET 4 X6	KUPFERNIET 4 X6	REMACHE EXTR. 4 X 6 U9200A A

TAV_095

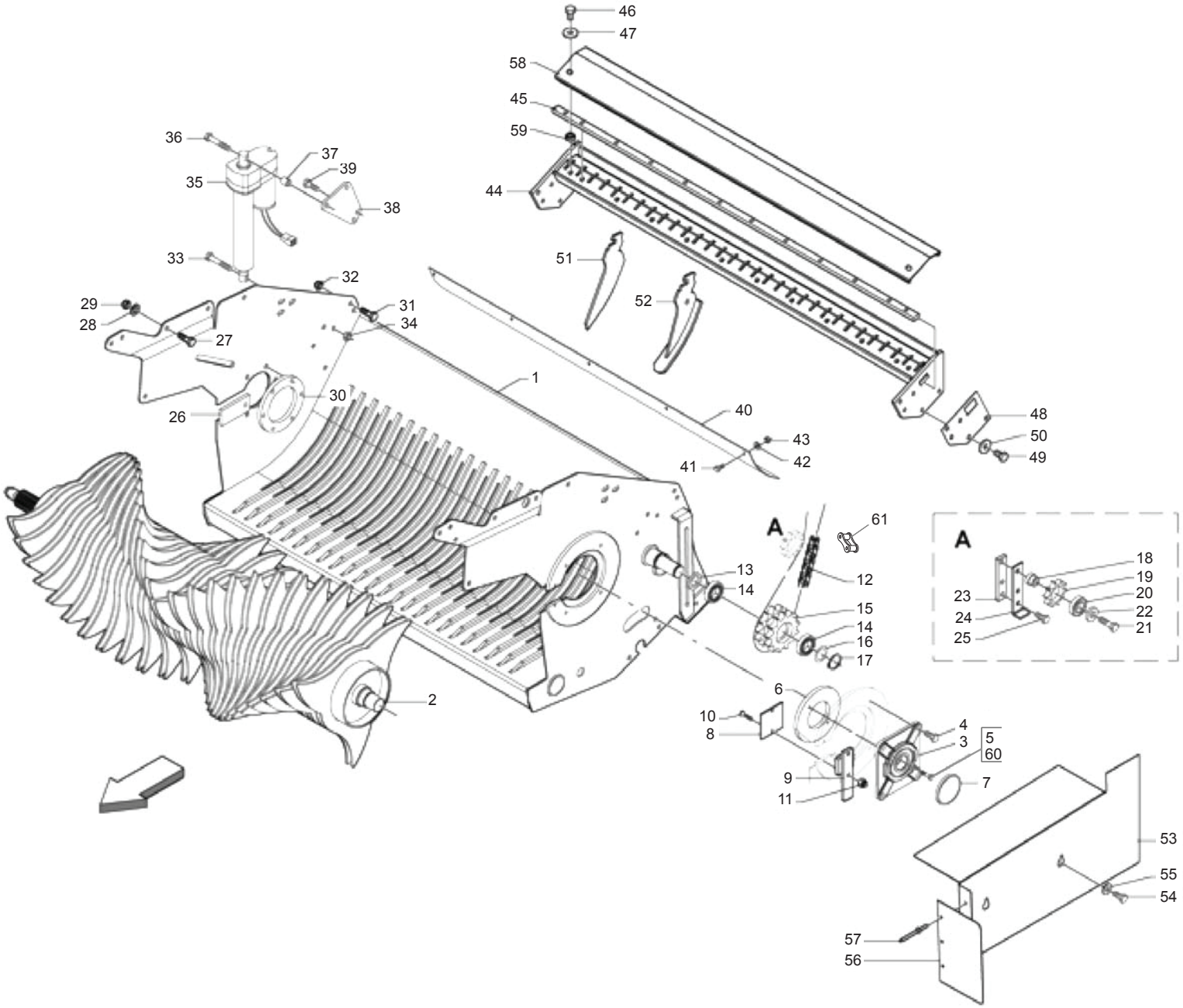

MASCHIO

cod. F07022338

CUT 25: TELAIO + ROTORE
CUT 25: FRAME + ROTOR

TAV_095

Pos.	Cod.	Descrizione	Description	Description	Benennung	Descripcion
58	B0C3P0153R	PROTEZIONI RASCHIATORI	PROTECTION	PROTECTION	SCHEUTZ ABSTERIFER	PROTECCIONES RASPADORES
59	B013C0126R	DISTANZIALE	SPACER	ENTRETOISE	DISTANZSTUECK	DISTANCIADOR
60	B00190850R	VITE M 8X1,25X 50 U5737 8.8ZN	SCREW	VIS	VERZINKTE SCHRAUBE	TORNILLO M 8X1,25X 50 U5737 8
61	B030E0017R	GIUNTO MOLL N26 ISO 16 B-1	SPRING JOINT N.26 ISO 16 B-1	JOINT RESSORT	KETTENFEDER	JUNTA DE MUELL N26 ISO 16 B-1

TAV_100

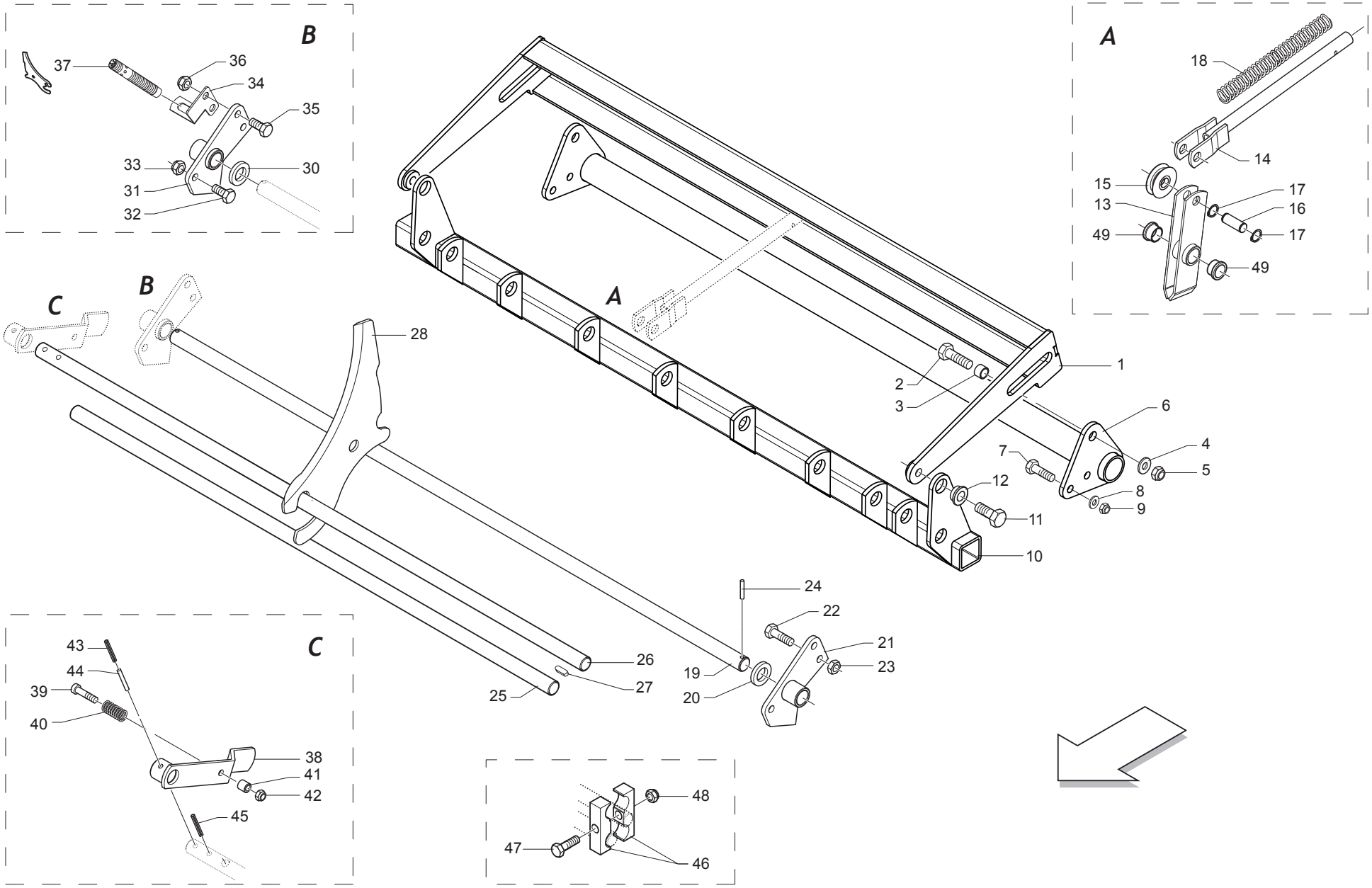

MASCHIO

cod. F07022338

CUT 13: TRAVERSA COLTELLI
CUT 13: KNIVES CROSSBAR

TAV_100

Pos.	Cod.	Descrizione	Description	Description	Benennung	Descripcion
1	B07S01802R	CONTRASTO MOLLE TOPCUT	KNIFE RESISTANCE TOPCUT	RESISTENCE DENTS TOPCUT	MESSERWIDERSTAND TOPCUT	CONTRASTE DE LOS MUELLES TOP
2	F01020568R	VITE M16X2X45 U5739 8.8ZN	SCR. M16X2X45 U5739 8.8ZN	VIS M 16X 2X45 U5739 8.8 ZG	SCHRAUBE M 16X 2X45 U5739 8.8	TORNILLO M16X2X45 U5739 8.8Z
3	B01300745R	DISTANZIALE 16X20X14	SPACER	ENTRETOISE	DISTANZSTUECK 16X20X14	DISTANCIADOR 16X20X14
4	F01410100R	ROS.M16 17X 30X 3 U6592 ZN	WASHER M16 17X30X3 U6592 ZN	RONDELLE M16 17X30X3 ZN	SCHRAUBE M16 17X 30X3 U6592 ZN	ARAND.M16 17X 30X 3 U6592 ZN
5	B00920516R	DADO M16X 1,5 D985 6S ZN	NUT M16X1,5 D985 6S ZN	ECROU	SELBSTSICHERNDE MUTTER M16-5S	TUERCA M16X 1,5 D985 6S
6	B07S01636R	COLLEGAMENTO INFERIORE NEW	LOWER CONNECTION	CONNECTION INFERIEURE	UNTERE VERBINDUNG	CONEXI N INFERIOR NEW
7	F01020508R	VITE M12X1,75X25 U5739 8.8ZN	SCR. M12X1,75X25 U5739 8.8ZN	VIS M12X1,75X25 U5739 8.8 ZN	SCHRAUBE M12X1,75X25U57398.8ZN	TORNILLO M12X1,75X25 U5739
8	F01410076R	ROS.M12 13X 24X2,5 U6592 ZN	WASHER 12 13X 24X2,5 U6592 ZN	RONDEL. M12 13X24X2,5 U6592 ZN	SCHEIBE M12 13X24X2,5 U6592 ZN	ARAND.M12 13X 24X2,5 U6592 ZN
9	F01230213R	DADO M12X1,75 U7474 CL8 ZN	NUT M12X1,75 U7474 6SZN	ECROU AUTOBL. M12	SELBSTSPERR.MUTTER M12	TUERCA M12X1,75 U7474 CL8 ZN
10	B07S01803R	COM. COLT. TOPCUT	KNIFE CONTROL TOPCUT	COMMANDE COUTEAUX TOPCUT	MESSERBETAETIGUNG TOPCUT	COM. CUCH. TOPCUT
11	F01020562R	VITE M16X2X30 U5739 8.8ZN	SCR. M16X2X30 U5739 8.8ZN	VIS M16X2X30 U5739 8.8 ZN	SCHRAUBE M16X2X30 U5739 8.8 ZN	TORNILLO M16X2X30 U5739 8.8ZN
12	B01300706R	BUSSOLA DI GUIDA	GUIDE BUSH	DOUILLE DE GUIDE	FUHRUNGSBUCHSE	CASQUILLO DE GU A
13	B07SP0024R	BILANCINO TOPCUT	TOPCUT ROCKER ARM	PALONNIER TOPCUT	SCHWINGE TOPCUT	BALANC N TOPCUT
14	B07S01125R	SOSTEGNO MOLLE	SPRING BRAKET	SUPPORT RESSORTS	FEDERHALTERUNG	SOPORTE DE LOS MUELLES
15	B03800014R	ROTELLA GUIDA COLTELLI	KNIVES GUIDE PULLEY	GALET GUIDE COUTEAUX	MESSER FUHRUNGSROLLE	ARANDELA DE GU A DE LAS CUCHI
16	B01300694R	PERNO CARRUCOLA COLTELLO	KNIFE ROLLER PIN	TOURILLON POULIE COUTEAU	MESSERFUHRUNGSROLLENBOLZEN	PERNO DE LA POLEA DE LA CUCHIL
17	B01700016R	ANEL. D ARR. ALB. 16-E UNI3653	SEEGER RING	BAGUE SEEGER	SEEGERING	ANIL. DE PARAD. RB. 16-E UNI3
18	B01800049R	MOLLA TRAVERSA COLTELLI	SPRING KNIV.CONTROL 5 30 293C	RESSORT	FEDER	MUELLE TRAVESA O DE LAS CUCHI
19	B03500034R	PERNO FULCRO	PIVOT	TOURILLON	DREHZAPFEN	PERNO FULCRO
20	B01300036R	RALLA 25,5X40 X 4	FIFTH WHEEL	BUTEE	LAGERSCHALE 25,5X40X4	RANGUA 25,5X40 X 4
21	B07S01145R	FULCRO SX LEVERISMI	LEFT LINKAGE FULCRUM	POINT D APPUI GAUCHE LEVIERS	LINKER HEBELWERKSCHWENKPUNKT	FULCRO IZQ GRUPO DE PALANCAS
22	F01020510R	VITE M12X1,75X30 U5739 8.8ZN	SCR. M12X1,75X30 U5739 8.8ZN	VIS M12X1,75X30 U5739 8.8ZN	SCHRAU.M12X1,75X30 U5739 8.8ZN	TORNILLO M12X1,75X30 U5739
23	F01230213R	DADO M12X1,75 U7474 CL8 ZN	NUT M12X1,75 U7474 6SZN	ECROU AUTOBL. M12	SELBSTSPERR.MUTTER M12	TUERCA M12X1,75 U7474 CL8 ZN
24	B01110635R	SPINA ELAST. 6X 35 SS DIN 1481	PIN	GOUPILLE	STIFT	CLAVIJA EL ST. 6X 35 SS DIN 14
25	B035P0016R	ASTA NEW	NEW ROD	TIGE NEW	STAB NEW	BARRA NEW
26	B035P0015R	FULCRO COLT. NEW	NEW KNIVES FULCRUM	POINT D APPUI COUTEAUX NEW	FULCRUM MESSER NEW	PERNO CUCHILL. NEW
27	F02150064R	LINGUETTA 8X 7X 25 U6604A	PARALLEL KEY 8X 7X 25 U6604A	CLAVETTE 8X7X25	FEDER 8X7X25 UNI 6604	LENG ETA 8X 7X 25 U6604A
28	B07U00035R	COLTELLO ULTRACUT	TOPCUT KNIFE	COUTEAU CUT	SPEZIAL TOPCUT KLINGE	CUCHILLA ULTRACUT
30	B01300036R	RALLA 25,5X40 X 4	FIFTH WHEEL	BUTEE	LAGERSCHALE 25,5X40X4	RANGUA 25,5X40 X 4
31	B07S01144R	FULCRO DX LEVERISMI	RIGHT LINKAGE FULCRUM	POINT D APPUI DROIT LEVIERS	RECHTER HEBELWERKSCHWENKPUNKT	FULCRO DER GRUPO DE PALANCA
32	F01020510R	VITE M12X1,75X30 U5739 8.8ZN	SCR. M12X1,75X30 U5739 8.8ZN	VIS M12X1,75X30 U5739 8.8ZN	SCHRAU.M12X1,75X30 U5739 8.8ZN	TORNILLO M12X1,75X30 U5739
33	F01230213R	DADO M12X1,75 U7474 CL8 ZN	NUT M12X1,75 U7474 6SZN	ECROU AUTOBL. M12	SELBSTSPERR.MUTTER M12	TUERCA M12X1,75 U7474 CL8 ZN
34	B0C004233R	SOSTEGNO PROSIMITI CUT	CUT SENSOR SUPPORT	SUPPORT SENSEUR CUT	CUT SENSORHALTERUNG	SOPORTE SENSOR DE PROXIMIDA
35	F01020512R	VITE M12X1,75X35 U5739 8.8ZN	SCR. M12X1,75X35 U5739 8.8ZN	VIS M12X1,75X35 5739 8.8 ZN	SCHR. M12X1,75X35 5739 8.8 ZN	TORNILLO M12X1,75X35 U5739 8
36	F01230213R	DADO M12X1,75 U7474 CL8 ZN	NUT M12X1,75 U7474 6SZN	ECROU AUTOBL. M12	SELBSTSPERR.MUTTER M12	TUERCA M12X1,75 U7474 CL8 ZN
37	B0E000056R	SENSORE PROSSIMITA BALLA M12	PROXIMITY SENSOR	CAPTEUR DE PROXIMITE	ABSTANDSMELDER	SENSOR DE PROXIMIDAD DE LA BA
38	B07S01159R	MANIGLIA DI SICUREZZA	SAFETY HANDLE	POULIE DE SURETE	SICHERUNGSHEBEL	MANIJA DE SEGURIDAD
39	F01040130R	VITE M10X1,5X60 U5931 8.8ZN	SCR. M10X1,5X60 U5931 8.8ZN			TORNILLO M10X1,5X60 U5931 8.8
40	B01821993R	MOLLA	SPRING	RESSORT	FEDER	MUELLE
41	B01300401R	BUSSOLA FILETTATA	PIN WITHOUT NET	DOUILLE FILETEE	NETZAUFNAHMEZANGENBOLZEN	CASQUILLO ROSCADO
42	F01230202R	DADO M10X 1,5 D985 8 ZN	NUT M10 D985	ECROU AUTOBL. M10	SELBSTSPERR.MUTTER M10	TUERCA M10X 1,5 D985 8
43	F02100142R	SPINA E.P. 8X 40 U6873 C70 BR	ELASTIC PIN 8X40	GOUJON ELASTIQUE 8X40	SPANNHUELSE 8X40	CLAVIJA EL.P. 8X 40 U6873 C70
44	F02100090R	SPINA E.P. 5X 40 U6873 C70 BR	ELASTIC PIN 5X40	GOUJON ELASTIQUE 5X40	SPANNHUELSE 5X40	CLAVIJA EL.P. 5X 40 U6873 C70
45	F02100142R	SPINA E.P. 8X 40 U6873 C70 BR	ELASTIC PIN 8X40	GOUJON ELASTIQUE 8X40	SPANNHUELSE 8X40	CLAVIJA EL.P. 8X 40 U6873 C70
46	B027P0001R	SEMIBIELLA DI TRASMISSIONE	DRIVE HALF ROD	DEMI BIELLE DE TRANSMISSION	HALB-KOLBENSTANGE	SEMI-BIELA DE TRANSMISI N
47	F01020162R	VITE M12X1,75X65 U5737 8.8ZN	SCR. M12X1,75X65 U5737 8.8ZN	VIS M12X1,75X65 U5737 8.8 ZN	SCHRA.M12X1,75X65 U5737 8.8 ZN	TORNILLO M12X1,75X65 U5737 8.
48	F01230213R	DADO M12X1,75 U7474 CL8 ZN	NUT M12X1,75 U7474 6SZN	ECROU AUTOBL. M12	SELBSTSPERR.MUTTER M12	TUERCA M12X1,75 U7474 CL8 ZN
49	B025P0003R	BUSSOLA NYLON	NYLON BUSH	DOUILLE EN NYLON	BUCHSE	CASQUILLO DE NAILON

TAV_105

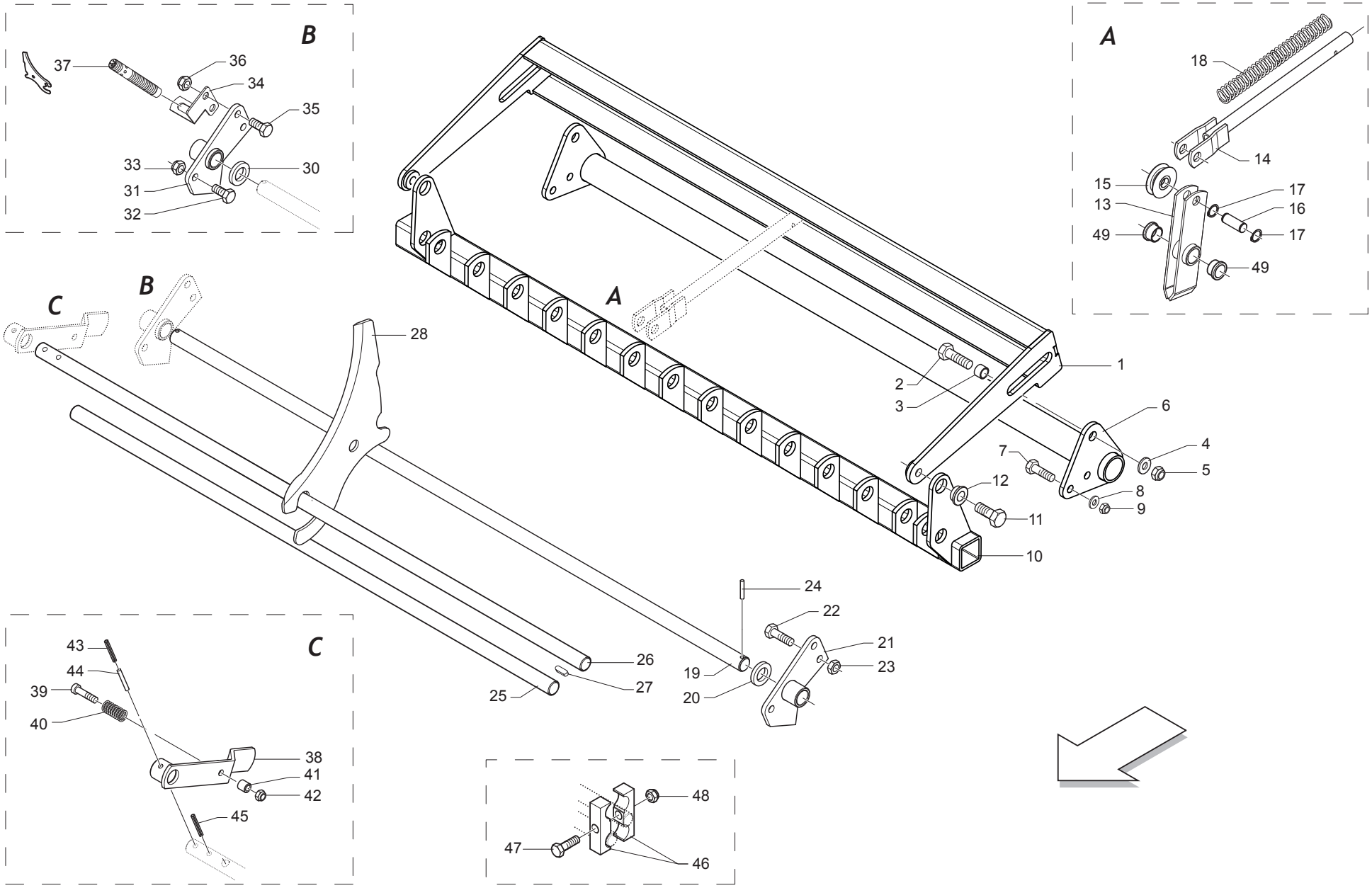

MASCHIO

cod. F07022338

CUT 25: TRAVERSA COLTELLI
CUT 25: KNIVES CROSSBAR

TAV_105

Pos.	Cod.	Descrizione	Description	Description	Benennung	Descripcion
1	B07S01142R	CONTRASTO MOLLE	KNIFE RESISTANCE ULTRACUT	CONTRASTE RESSORTS	MESSERWIDERSTAND ULTRACUT	CONTRASTE DE LOS MUELLES
2	F01020568R	VITE M16X2X45 U5739 8.8ZN	SCR. M16X2X45 U5739 8.8ZN	VIS M 16X 2X45 U5739 8.8 ZG	SCHRAUBE M 16X 2X45 U5739 8.8	TORNILLO M16X2X45 U5739 8.8Z
3	B01300745R	DISTANZIALE 16X20X14	SPACER	ENTRETOISE	DISTANZSTUECK 16X20X14	DISTANCIADOR 16X20X14
4	F01410100R	ROS.M16 17X 30X 3 U6592 ZN	WASHER M16 17X30X3 U6592 ZN	RONDELLE M16 17X30X3 ZN	SCHRAUBE M16 17X 30X3 U6592 ZN	ARAND.M16 17X 30X 3 U6592 ZN
5	B00920516R	DADO M16X 1,5 D985 6S ZN	NUT M16X1,5 D985 6S ZN	ECROU	SELBSTSICHERNDE MUTTER M16-5S	TUERCA M16X 1,5 D985 6S
6	B07S01636R	COLLEGAMENTO INFERIORE NEW	LOWER CONNECTION	CONNECTION INFERIEURE	UNTERE VERBINDUNG	CONEXI N INFERIOR NEW
7	F01020508R	VITE M12X1,75X25 U5739 8.8ZN	SCR. M12X1,75X25 U5739 8.8ZN	VIS M12X1,75X25 U5739 8.8 ZN	SCHRAUBE M12X1,75X25U57398.8ZN	TORNILLO M12X1,75X25 U5739
8	F01410076R	ROS.M12 13X 24X2,5 U6592 ZN	WASHER 12 13X 24X2,5 U6592 ZN	RONDEL. M12 13X24X2,5 U6592 ZN	SCHEIBE M12 13X24X2,5 U6592 ZN	ARAND.M12 13X 24X2,5 U6592 ZN
9	F01230213R	DADO M12X1,75 U7474 CL8 ZN	NUT M12X1,75 U7474 6SZN	ECROU AUTOBL. M12	SELBSTSPERR.MUTTER M12	TUERCA M12X1,75 U7474 CL8 ZN
10	B07S01143R	COMANDO COLTELLI	KNIFE CONTROL	COMMANDE COUTEAUX	MESSERBETAETIGUNG	MANDO DE LAS CUCHILLAS
11	F01020562R	VITE M16X2X30 U5739 8.8ZN	SCR. M16X2X30 U5739 8.8ZN	VIS M16X2X30 U5739 8.8 ZN	SCHRAUBE M16X2X30 U5739 8.8 ZN	TORNILLO M16X2X30 U5739 8.8ZN
12	B01300706R	BUSSOLA DI GUIDA	GUIDE BUSH	DOUILLE DE GUIDE	FUHRUNGSBUCHSE	CASQUILLO DE GU A
13	B07SP0048R	BILANCINO NEW	NEW ROCKER ARM	PALONNIER NEW	SCHWINGE NEW	BALANC N NEW
14	B07S01125R	SOSTEGNO MOLLE	SPRING BRAKET	SUPPORT RESSORTS	FEDERHALTERUNG	SOPORTE DE LOS MUELLES
15	B03800014R	ROTELLA GUIDA COLTELLI	KNIVES GUIDE PULLEY	GALET GUIDE COUTEAUX	MESSER FUHRUNGSROLLE	ARANDELA DE GU A DE LAS CUCHI
16	B01300694R	PERNO CARRUCOLA COLTELLO	KNIFE ROLLER PIN	TOURILLON POULIE COUTEAU	MESSERFUHRUNGSROLLENBOLZEN	PERNO DE LA POLEA DE LA CUCHIL
17	B01700016R	ANEL. D ARR. ALB. 16-E UNI3653	SEEGER RING	BAGUE SEEGER	SEEGERING	ANIL. DE PARAD. RB. 16-E UNI3
18	B01800049R	MOLLA TRAVERSA COLTELLI	SPRING KNIV.CONTROL 5 30 293C	RESSORT	FEDER	MUELLE TRAVESA O DE LAS CUCHI
19	B03500034R	PERNO FULCRO	PIVOT	TOURILLON	DREHZAPFEN	PERNO FULCRO
20	B01300036R	RALLA 25,5X40 X 4	FIFTH WHEEL	BUTEE	LAGERSCHALE 25,5X40X4	RANGUA 25,5X40 X 4
21	B07S01145R	FULCRO SX LEVERISMI	LEFT LINKAGE FULCRUM	POINT D APPUI GAUCHE LEVIERS	LINKER HEBELWERKSCHWENKPUNKT	FULCRO IZQ GRUPO DE PALANCAS
22	F01020510R	VITE M12X1,75X30 U5739 8.8ZN	SCR. M12X1,75X30 U5739 8.8ZN	VIS M12X1,75X30 U5739 8.8ZN	SCHRAU.M12X1,75X30 U5739 8.8ZN	TORNILLO M12X1,75X30 U5739
23	F01230213R	DADO M12X1,75 U7474 CL8 ZN	NUT M12X1,75 U7474 6SZN	ECROU AUTOBL. M12	SELBSTSPERR.MUTTER M12	TUERCA M12X1,75 U7474 CL8 ZN
24	B01110635R	SPINA ELAST. 6X 35 SS DIN 1481	PIN	GOUPILLE	STIFT	CLAVIJA EL ST. 6X 35 SS DIN 14
25	B035P0016R	ASTA NEW	NEW ROD	TIGE NEW	STAB NEW	BARRA NEW
26	B035P0015R	FULCRO COLT. NEW	NEW KNIVES FULCRUM	POINT D APPUI COUTEAUX NEW	FULCRUM MESSER NEW	PERNO CUCHILL. NEW
27	F02150064R	LINGUETTA 8X 7X 25 U6604A	PARALLEL KEY 8X 7X 25 U6604A	CLAVETTE 8X7X25	FEDER 8X7X25 UNI 6604	LENG ETA 8X 7X 25 U6604A
28	B07U00035R	COLTELLO ULTRACUT	TOPCUT KNIFE	COUTEAU CUT	SPEZIAL TOPCUT KLINGE	CUCHILLA ULTRACUT
30	B01300036R	RALLA 25,5X40 X 4	FIFTH WHEEL	BUTEE	LAGERSCHALE 25,5X40X4	RANGUA 25,5X40 X 4
31	B07S01144R	FULCRO DX LEVERISMI	RIGHT LINKAGE FULCRUM	POINT D APPUI DROIT LEVIERS	RECHTER HEBELWERKSCHWENKPUNKT	FULCRO DER GRUPO DE PALANCA
32	F01020510R	VITE M12X1,75X30 U5739 8.8ZN	SCR. M12X1,75X30 U5739 8.8ZN	VIS M12X1,75X30 U5739 8.8ZN	SCHRAU.M12X1,75X30 U5739 8.8ZN	TORNILLO M12X1,75X30 U5739
33	F01230213R	DADO M12X1,75 U7474 CL8 ZN	NUT M12X1,75 U7474 6SZN	ECROU AUTOBL. M12	SELBSTSPERR.MUTTER M12	TUERCA M12X1,75 U7474 CL8 ZN
34	B0C004233R	SOSTEGNO PROSIMITI CUT	CUT SENSOR SUPPORT	SUPPORT SENSEUR CUT	CUT SENSORHALTERUNG	SOPORTE SENSOR DE PROXIMIDA
35	F01020512R	VITE M12X1,75X35 U5739 8.8ZN	SCR. M12X1,75X35 U5739 8.8ZN	VIS M12X1,75X35 5739 8.8 ZN	SCHR. M12X1,75X35 5739 8.8 ZN	TORNILLO M12X1,75X35 U5739 8
36	F01230213R	DADO M12X1,75 U7474 CL8 ZN	NUT M12X1,75 U7474 6SZN	ECROU AUTOBL. M12	SELBSTSPERR.MUTTER M12	TUERCA M12X1,75 U7474 CL8 ZN
37	B0E000056R	SENSORE PROSSIMITA BALLA M12	PROXIMITY SENSOR	CAPTEUR DE PROXIMITE	ABSTANDSMELDER	SENSOR DE PROXIMIDAD DE LA BA
38	B07S01159R	MANIGLIA DI SICUREZZA	SAFETY HANDLE	POULIE DE SURETE	SICHERUNGSHEBEL	MANIJA DE SEGURIDAD
39	F01040130R	VITE M10X1,5X60 U5931 8.8ZN	SCR. M10X1,5X60 U5931 8.8ZN			TORNILLO M10X1,5X60 U5931 8.8
40	B01821993R	MOLLA	SPRING	RESSORT	FEDER	MUELLE
41	B01300401R	BUSSOLA FILETTATA	PIN WITHOUT NET	DOUILLE FILETEE	NETZAUFNAHMEZANGENBOLZEN	CASQUILLO ROSCADO
42	F01230202R	DADO M10X 1,5 D985 8 ZN	NUT M10 D985	ECROU AUTOBL. M10	SELBSTSPERR.MUTTER M10	TUERCA M10X 1,5 D985 8
43	F02100142R	SPINA E.P. 8X 40 U6873 C70 BR	ELASTIC PIN 8X40	GOUJON ELASTIQUE 8X40	SPANNHUELSE 8X40	CLAVIJA EL.P. 8X 40 U6873 C70
44	F02100090R	SPINA E.P. 5X 40 U6873 C70 BR	ELASTIC PIN 5X40	GOUJON ELASTIQUE 5X40	SPANNHUELSE 5X40	CLAVIJA EL.P. 5X 40 U6873 C70
45	F02100142R	SPINA E.P. 8X 40 U6873 C70 BR	ELASTIC PIN 8X40	GOUJON ELASTIQUE 8X40	SPANNHUELSE 8X40	CLAVIJA EL.P. 8X 40 U6873 C70
46	B027P0001R	SEMIBIELLA DI TRASMISSIONE	DRIVE HALF ROD	DEMI BIELLE DE TRANSMISSION	HALB-KOLBENSTANGE	SEMI-BIELA DE TRANSMISI N
47	F01020162R	VITE M12X1,75X65 U5737 8.8ZN	SCR. M12X1,75X65 U5737 8.8ZN	VIS M12X1,75X65 U5737 8.8 ZN	SCHRA.M12X1,75X65 U5737 8.8 ZN	TORNILLO M12X1,75X65 U5737 8.
48	F01230213R	DADO M12X1,75 U7474 CL8 ZN	NUT M12X1,75 U7474 6SZN	ECROU AUTOBL. M12	SELBSTSPERR.MUTTER M12	TUERCA M12X1,75 U7474 CL8 ZN
49	B025P0003R	BUSSOLA NYLON	NYLON BUSH	DOUILLE EN NYLON	BUCHSE	CASQUILLO DE NAILON

TAV_110

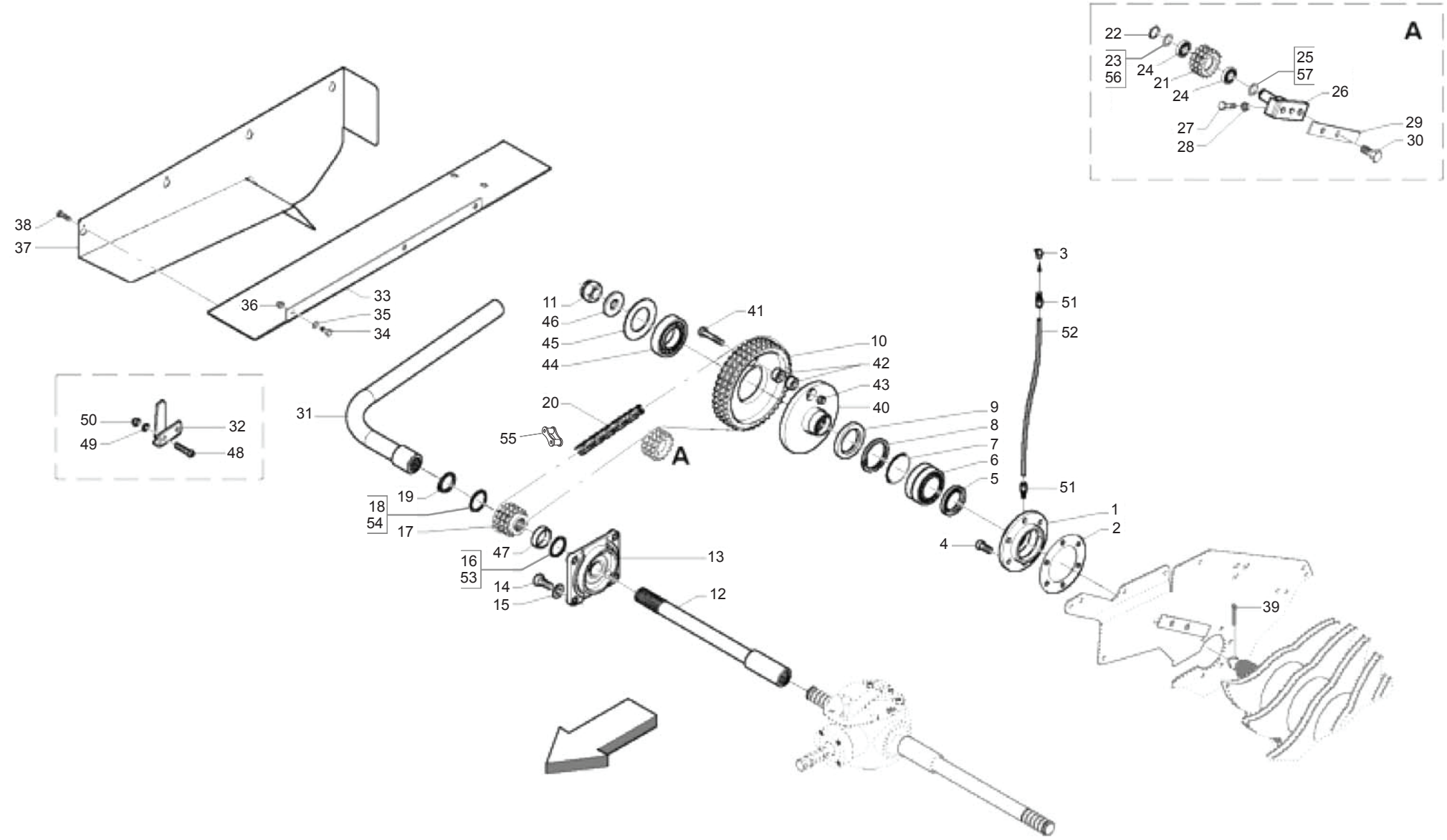

MASCHIO

cod. F07022338

SICUREZZA TRASMISSIONE: MECCANICA CON BULLONE
TRASMISSION SAFETY DEVICE: MECHANICAL WITH BOLT

TAV_110

Pos.	Cod.	Descrizione	Description	Description	Benennung	Descripcion
1	B02700052R	SUPP. COM. ROT.	CONTROL ROTOR SUPPORT	SUPPORT CONTROLE ROTOR	LAGER DES ROTORSANTRIEBS	SOP. COM. ROLL.
2	B01300960R	SPESSORE SUPPORTO ROTORE	ROTOR SUPPORT SPACING	ENTRETOISE SUPPORT ROTOR	DISTANZSTUCK FUR ROTORLAGER	ESPESOR DEL SOPORTE DEL ROT
3	B04200610R	INGRASS.A SFERE M6X1 LUNGO	GREASE NIPPLE	GRAISSEUR HYDRAULIQUE	GERADER SCHMIERNIPPEL M6X1	ENGRASADOR DE ESFERAS M6X1
4	F01040140R	VITE M12X1,75X 40 U5931 8.8ZN	SCREW M12X1,75X 40 U5931 8.8Z			TORNILLO M12X1,75X 40 U5931 8.
5	B04304966R	ANELLO TENUTA 55X 85X10 NORM	SEAL	BAGUE	DICHTUNG 55X85X10	ANILLO DE RETENCI N 55X 85X10
6	B02335023R	CUSC. 22210 CAT.B-ST004	BEARING	ROULEMENT	LAGER 22210	COJIN. 22210 CAT.B-ST004
7	B01534318R	SPES. 80 90 0,2	SHIM	ENTRETOISE	DISTANZSTUECK 80 90 0,2	ESPES. 80 90 0,2
8	B01710090R	ANEL. D ARR. FORO 90-I UNI3654	SEEGER RING	BAGUE SEEGER	SEEGERRING 90-I	ANIL. DE PARAD. ORIFICIO 90-I
9	B04305668R	ANELLO TENUTA 65X 90X10 NORM	SEAL	BAGUE	DICHTUNG 65X90X10	ANILLO DE RETENCI N 65X 90X10
10	B03400070R	CORONA Z=42; 3 4; ISO 12B-3	PLATE WHEEL Z=42;3 4;ISO 12B-3	ENGRENAGE TRIPLE	DREIFACH ZAHNRAD Z=42 -3 4 X	ENGR. TRIP Z42 - 3 4 X 7 16
11	B00851530R	DADO M30X 2 U5588 6S ZN	NUT	ECROU	KRONENMUTTER M30X2-6S	TUERCA M30X 2 U5588 6S ZN
12	B0R000304R	ALBERO PROLUNGA L=602	EXTENSION SHAFT L=602	ARBRE RALLONGE L=602	VERLAENGERUNGSWELLE L=602	RBOL PROLONGACI N L=602
13	B02700051R	SUPPORTO FLANGIATO	FLANGED SUPPORT	SUPPORT EMBOUTI	FLANSCHLAGER	SOPORTE CON BRIDA
14	F01020512R	VITE M12X1,75X35 U5739 8.8ZN	SCR. M12X1,75X35 U5739 8.8ZN	VIS M12X1,75X35 5739 8.8 ZN	SCHR. M12X1,75X35 5739 8.8 ZN	TORNILLO M12X1,75X35 U5739 8
15	F01410076R	ROS.M12 13X 24X2,5 U6592 ZN	WASHER 12 13X 24X2,5 U6592 ZN	RONDEL. M12 13X24X2,5 U6592 ZN	SCHEIBE M12 13X24X2,5 U6592 ZN	ARAND.M12 13X 24X2,5 U6592 ZN
16	B01300151R	SPES. 40 48 2 ZINCATO	SHIM	ENTRETOISE	DISTANZSTUECK 40 48 2	ESPES. 40 48 2 CINCADO
17	B03400072R	PIGNONE Z=13;3 4-7 16;ISO12B-3	SPROCKET Z=13;3 4-7 16;ISO12B-	ENGRENAGE TRIPLE	DREIFACH ZAHNRAD Z=13-3 4 X7 1	ENGR.TRIPLE Z=13-3 4 X7 16
18	B01300151R	SPES. 40 48 2 ZINCATO	SHIM	ENTRETOISE	DISTANZSTUECK 40 48 2	ESPES. 40 48 2 CINCADO
19	B01700040R	ANEL. D ARR. ALBERO 40-E UNI 3	SEEGER RING	BAGUE SEEGER	SEEGERRING 40-E	ANIL. DE PARAD. RBOL 40-E UNI
20	B030F1117R	CATENA RULLI ISO 12 B - 3 117M	ROLLER CHAIN ISO12 B-3 117M	CHAINE ROULEAUX	WALZENKETTE ISO 12 B	CADENA DE LOS RODILLOS ISO 12
21	B03400073R	INGR.TRIPLO Z=13-3 4 X7 16	TRIPLE GEAR Z=13-3 4 X7 16	ENGRENAGE TRIPLE	DREIFACH-ZAHNRAD Z=13-3 4 X7	ENGR.TRIPLE Z=13-3 4 X7 16
22	F02050101R	ANELLO E. DE 25X 1,2 U7435 C7	SEEGER RING E. 25X1,2 7435 C70	SEEGER E. 25X 1,2 U7435 C70	SEEGERING E. 25X 1,2 U7435 C70	ANILLO E. DE 25X 1,2 U7435 C7
23	B01300105R	SPES. 25,5 37 0,5	SHIM	ENTRETOISE	DISTANZSTUECK 25,5 37 0,5	ESPES. 25,5 37 0,5
24	B02042512R	CUSC 6005-2RS CAT.B-ST004	BEARING	ROULEMENT	LAGER	COJIN.6005-2RS CAT.B-ST004
25	B01300106R	SPES. 25,5 37 1 ZINCATO	SHIM GALV	ENTRETOISE GALV	DISTANZSTUECK 25,5 37 1	ESPES. 25,5 37 1 CINCADO
26	B07S00848R	PERNO TENDITORE	TENSIONER PIN	TOURILLON TENDEUR	SPANNBOLZEN	PERNO TENSOR
27	F01020522R	VITE M12X1,75X80 U5739 8.8ZN	SCR. M12X1,75X80 U5739 8.8ZN	VIS M12X1,75X80 U5739 8.8ZN	SCHRA.M12X1,75X80 U5739 8.8ZN	TORNILLO M12X1,75X80 U5739 8
28	F01200293R	DADO M12X1,75 U5588 CL8 ZN	NUT M12X1,75 U5588 6S ZN	ECROU M12X1,75 U5588 6S ZN	MUTTER M12X1,75 U5588 6S ZN	TUERCA M12X1,75 U5588 CL8 ZN
29	B0C002732R	RINFORZO	REINFORCEMENT	RENFORT	VERSTAERKUNG	REFUERZO
30	F01020564R	VITE M16X2X35 U5739 8.8ZN	SCR. M16X2X35 U5739 8.8ZN	VIS M 16X35	SCHRAUBE M 16X35	TORNILLO M16X2X35 U5739 8
31	B07S01804R	MANIGLIA SGOLFAMENTO CUT	HANDLE	POIGNEE DEBOURRAGE CUT	KURBEL	MANIJA DESATASQUE CUT
32	B0C005030R	SOSTEGNO MANIGLIA	HANDLE SUPPORT	SUPPORT POIGN E	GRIFFHALTERUNG	SOPORTE DE LA MANIJA
33	B0C002663R	ATTACCO CARTER CUT	COVER PLATE ATTACHMENT	ATTELAGE CARTER CUT	ABECKBLECHHALTERUNG	CONEZI N C RTER CUT
34	F01020508R	VITE M12X1,75X25 U5739 8.8ZN	SCR. M12X1,75X25 U5739 8.8ZN	VIS M12X1,75X25 U5739 8.8 ZN	SCHRAUBE M12X1,75X25U57398.8ZN	TORNILLO M12X1,75X25 U5739
35	F01410076R	ROS.M12 13X 24X2,5 U6592 ZN	WASHER 12 13X 24X2,5 U6592 ZN	RONDEL. M12 13X24X2,5 U6592 ZN	SCHEIBE M12 13X24X2,5 U6592 ZN	ARAND.M12 13X 24X2,5 U6592 ZN
36	F01230213R	DADO M12X1,75 U7474 CL8 ZN	NUT M12X1,75 U7474 6SZN	ECROU AUTOBL. M12	SELBSTSPERR.MUTTER M12	TUERCA M12X1,75 U7474 CL8 ZN
37	B07S01212R	CARTER TRASMISSIONE ROT.	ROTOR TRANSMISSION COVER	CARTER TRANSMISSION ROTOR	ROTORANTRIEBABDECKBLECH	C RTER DE TRANSMISI N DE LA RO
38	F01020432R	VITE M8X1,25X16 U5739 8.8ZN	SCR. M8X1,25X16 U5739 8.8ZN	VIS M8 X1,25X16 U5739 8.8 ZN	SCHRAUBE M8X1,25X16U5739 8.8ZN	TORNILLO M8X1,25X16 U5739 8.8
39	B0150560R	COPIGLIA 5X 70 U1336 ZN	GALV PIN	GOUPILLE GALV	SPLINT	PASADOR 5X 70 U1336 ZN
40	B02700079R	SICUREZZA ROTORE	ROTOR SAFETY	SURETE ROTEUR	SCHERBOLZEN	SEGURIDAD ROT.
41	F01020203R	VITE M14X2X60 U5737 8.8ZN	SCR. M14X2X60 U5737 8.8ZN	VIS M 14X60	SCHRAUBE M 14X60	TORNILLO M14X2X60 U5737 8.8Z
42	B01300702R	BUSSOLA D=35 D=14.5 L=18.5	BUSH D=35 D=14.5 L=18.5	DOUILLE	BUCHSE	CASQUILLO D=35 D=14.5 L=18.5
43	B00920514R	DADO M14X 2 D985 8 ZN	NUT	ECROU	SELBSTSICHERNDE MUTTER M14-5S	TUERCA M14X 2 D985 8
44	B02047020R	CUSC. 6014-2RS CAT.B-ST004	BEARING	ROULEMENT	LAGER 6014-2RS	COJIN. 6014-2RS CAT.B-ST00
45	B01300824R	FLANGIA	FLANGE	FLASQUE	FLANSCH	BRIDA
46	B01300823R	RALLA 30,5X92X8	FITH WHEEL	BUTEE	SCHEIBE 30,5X92X8	RANGUA 30,5X92X8
47	B01300355R	DISTANZIALE 40X54X20	SPACER	ENTRETOISE	ABSTANDSTUECK 40X54X20	DISTANCIADOR 40X54X20
48	B00471280R	VITE TTEI M12X 80-10.9 UNBRAKO	SCREW	VIS	SCHRAUBE TTEI M12X 80-8.8	TORNILLO CAB.ALLEN CON HUECO
49	F01410076R	ROS.M12 13X 24X2,5 U6592 ZN	WASHER 12 13X 24X2,5 U6592 ZN	RONDEL. M12 13X24X2,5 U6592 ZN	SCHEIBE M12 13X24X2,5 U6592 ZN	ARAND.M12 13X 24X2,5 U6592 ZN
50	F01230213R	DADO M12X1,75 U7474 CL8 ZN	NUT M12X1,75 U7474 6SZN	ECROU AUTOBL. M12	SELBSTSPERR.MUTTER M12	TUERCA M12X1,75 U7474 CL8 ZN
51	B0H000259R	RACCORDO M6X1 COMPLETO	FITTING OUT M6X1	RACCORD	KUPPLUNG M6X1	RACOR M6X1 COMPLETO
52	B0H0P0029R	TUBETTO NYLON 4 L 180	NYLON HOSE	TUYAU EN NYLON	KLEINS ROHR AUS NYLON	TUBO DE NAILON 4 L 180
53	B01300150R	SPES. 40 48 1,5 ZINCATO	SHIM GALV	ENTRETOISE GALV	DISTANZSTUECK 40 48 1,5	ESPES. 40 48 1,5 CINCADO
54	B01300150R	SPES. 40 48 1,5 ZINCATO	SHIM GALV	ENTRETOISE GALV	DISTANZSTUECK 40 48 1,5	ESPES. 40 48 1,5 CINCADO
55	B030F0017R	GIUNTO MOLL.N. 26 ISO 12 B - 3	SPRING JOINT N.26 ISO 12 B-3	JOINT RESSORT	KUPPLUNGSSTUCK N. 26 ISO	JUNTA DE MUELLE N. 26 ISO 12 B
56	B01300106R	SPES. 25,5 37 1 ZINCATO	SHIM GALV	ENTRETOISE GALV	DISTANZSTUECK 25,5 37 1	ESPES. 25,5 37 1 CINCADO
57	B01300105R	SPES. 25,5 37 0,5	SHIM	ENTRETOISE	DISTANZSTUECK 25,5 37 0,5	ESPES. 25,5 37 0,5

TAV_115

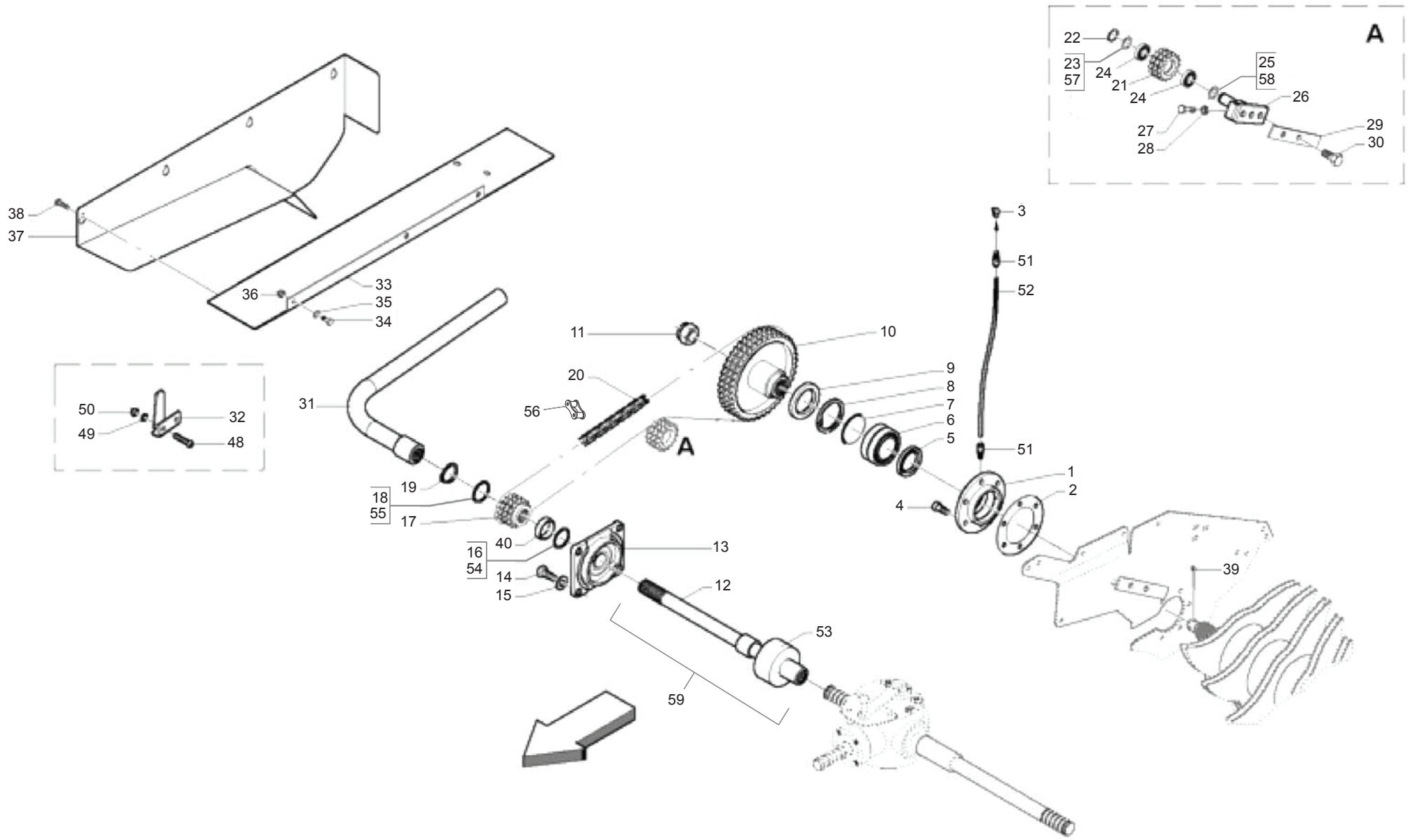

MASCHIO

cod. F07022338

SICUREZZA TRASMISSIONE: AUTOMATICA "AFC"
TRANSMISSIONE SAFETY DEVICE: AUTOMATIC "AFC"

TAV_115

Pos.	Cod.	Descrizione	Description	Description	Benennung	Descripcion
1	B02700052R	SUPP. COM. ROT.	CONTROL ROTOR SUPPORT	SUPPORT CONTROLE ROTOR	LAGER DES ROTORSANTRIEBS	SOP. COM. ROLL.
2	B01300960R	SPESSORE SUPPORTO ROTORE	ROTOR SUPPORT SPACING	ENTRETOISE SUPPORT ROTOR	DISTANZSTUCK FUR ROTORLAGER	ESPESOR DEL SOPORTE DEL ROT
3	B04200610R	INGRASS.A SFERE M6X1 LUNGO	GREASE NIPPLE	GRAISSEUR HYDRAULIQUE	GERADER SCHMIERNIPPEL M6X1	ENGRASADOR DE ESFERAS M6X1
4	F01040140R	VITE M12X1,75X 40 U5931 8.8ZN	SCREW M12X1,75X 40 U5931 8.8Z			TORNILLO M12X1,75X 40 U5931 8.
5	B04304966R	ANELLO TENUTA 55X 85X10 NORM	SEAL	BAGUE	DICHTUNG 55X85X10	ANILLO DE RETENCI N 55X 85X10
6	B02335023R	CUSC. 22210 CAT.B-ST004	BEARING	ROULEMENT	LAGER 22210	COJIN. 22210 CAT.B-ST004
7	B01534318R	SPES. 80 90 0,2	SHIM	ENTRETOISE	DISTANZSTUECK 80 90 0,2	ESPES. 80 90 0,2
8	B01710090R	ANEL. D ARR. FORO 90-I UNI3654	SEEGER RING	BAGUE SEEGER	SEEGERRING 90-I	ANIL. DE PARAD. ORIFICIO 90-I
9	B04305668R	ANELLO TENUTA 65X 90X10 NORM	SEAL	BAGUE	DICHTUNG 65X90X10	ANILLO DE RETENCI N 65X 90X10
10	B07S01609R	INGRANAGGIO ROT.	ROTOR SPROCKET	ENGRANAGE ROTOR	ROTOR ZAHNRAD	ENGRANAJE DE ROT.
11	B00851530R	DADO M30X 2 U5588 6S ZN	NUT	ECROU	KRONENMUTTER M30X2-6S	TUERCA M30X 2 U5588 6S ZN
12	B03600127R	ALBERO PROLUNGA L=399	EXTENSION SHAFT L=395	ARBRE L=395	VERLAENGERUNGSWELLE L=399	RBOL PROLONGACI N L=399
13	B02700051R	SUPPORTO FLANGIATO	FLANGED SUPPORT	SUPPORT EMBOUTI	FLANSCHLAGER	SOPORTE CON BRIDA
14	F01020512R	VITE M12X1,75X35 U5739 8.8ZN	SCR. M12X1,75X35 U5739 8.8ZN	VIS M12X1,75X35 5739 8.8 ZN	SCHR. M12X1,75X35 5739 8.8 ZN	TORNILLO M12X1,75X35 U5739 8
15	F01410076R	ROS.M12 13X 24X2,5 U6592 ZN	WASHER 12 13X 24X2,5 U6592 ZN	RONDEL. M12 13X24X2,5 U6592 ZN	SCHEIBE M12 13X24X2,5 U6592 ZN	ARAND.M12 13X 24X2,5 U6592 ZN
16	B01300151R	SPES. 40 48 2 ZINCATO	SHIM	ENTRETOISE	DISTANZSTUECK 40 48 2	ESPES. 40 48 2 CINCADO
17	B03400072R	PIGNONE Z=13;3 4-7 16;ISO12B-3	SPROCKET Z=13;3 4-7 16;ISO12B-	ENGRENAGE TRIPLE	DREIFACH ZAHNRAD Z=13-3 4 X7 1	ENGR.TRIPLE Z=13-3 4 X7 16
18	B01300150R	SPES. 40 48 1,5 ZINCATO	SHIM GALV	ENTRETOISE GALV	DISTANZSTUECK 40 48 1,5	ESPES. 40 48 1,5 CINCADO
19	B01700040R	ANEL. D ARR. ALBERO 40-E UNI 3	SEEGER RING	BAGUE SEEGER	SEEGERRING 40-E	ANIL. DE PARAD. RBOL 40-E UNI
20	B030F1117R	CATENA RULLI ISO 12 B - 3 117M	ROLLER CHAIN ISO12 B-3 117M	CHAINE ROULEAUX	WALZENKETTE ISO 12 B	CADENA DE LOS RODILLOS ISO 12
21	B03400073R	INGR.TRIPLO Z=13-3 4 X7 16	TRIPLE GEAR Z=13-3 4 X7 16	ENGRENAGE TRIPLE	DREIFACH-ZAHNRAD Z=13-3 4 X7	ENGR.TRIPLE Z=13-3 4 X7 16
22	F02050101R	ANELLO E. DE 25X 1,2 U7435 C7	SEEGER RING E. 25X1,2 7435 C70	SEEGER E. 25X 1,2 U7435 C70	SEEGERING E. 25X 1,2 U7435 C70	ANILLO E. DE 25X 1,2 U7435 C7
23	B01300105R	SPES. 25,5 37 0,5	SHIM	ENTRETOISE	DISTANZSTUECK 25,5 37 0,5	ESPES. 25,5 37 0,5
24	B02042512R	CUSC 6005-2RS CAT.B-ST004	BEARING	ROULEMENT	LAGER	COJIN.6005-2RS CAT.B-ST004
25	B01300106R	SPES. 25,5 37 1 ZINCATO	SHIM GALV	ENTRETOISE GALV	DISTANZSTUECK 25,5 37 1	ESPES. 25,5 37 1 CINCADO
26	B07S00848R	PERNO TENDITORE	TENSIONER PIN	TOURILLON TENDEUR	SPANNBOLZEN	PERNO TENSOR
27	F01020522R	VITE M12X1,75X80 U5739 8.8ZN	SCR. M12X1,75X80 U5739 8.8ZN	VIS M12X1,75X80 U5739 8.8ZN	SCHRA.M12X1,75X80 U5739 8.8ZN	TORNILLO M12X1,75X80 U5739 8
28	F01200293R	DADO M12X1,75 U5588 CL8 ZN	NUT M12X1,75 U5588 6S ZN	ECROU M12X1,75 U5588 6S ZN	MUTTER M12X1,75 U5588 6S ZN	TUERCA M12X1,75 U5588 CL8 ZN
29	B0C002732R	RINFORZO	REINFORCEMENT	RENFORT	VERSTAERKUNG	REFUERZO
30	F01020564R	VITE M16X2X35 U5739 8.8ZN	SCR. M16X2X35 U5739 8.8ZN	VIS M 16X35	SCHRAUBE M 16X35	TORNILLO M16X2X35 U5739 8
31	B07S01804R	MANIGLIA SGOLFAMENTO CUT	HANDLE	POIGNEE DEBOURRAGE CUT	KURBEL	MANIJA DESATASQUE CUT
32	B0C005030R	SOSTEGNO MANIGLIA	HANDLE SUPPORT	SUPPORT POIGN E	GRIFFHALTERUNG	SOPORTE DE LA MANIJA
33	B0C002663R	ATTACCO CARTER CUT	COVER PLATE ATTACHMENT	ATTELAGE CARTER CUT	ABECKBLECHHALTERUNG	CONEZI N C RTER CUT
34	F01020508R	VITE M12X1,75X25 U5739 8.8ZN	SCR. M12X1,75X25 U5739 8.8ZN	VIS M12X1,75X25 U5739 8.8 ZN	SCHRAUBE M12X1,75X25U57398.8ZN	TORNILLO M12X1,75X25 U5739
35	F01410076R	ROS.M12 13X 24X2,5 U6592 ZN	WASHER 12 13X 24X2,5 U6592 ZN	RONDEL. M12 13X24X2,5 U6592 ZN	SCHEIBE M12 13X24X2,5 U6592 ZN	ARAND.M12 13X 24X2,5 U6592 ZN
36	F01230213R	DADO M12X1,75 U7474 CL8 ZN	NUT M12X1,75 U7474 6SZN	ECROU AUTOBL. M12	SELBSTSPERR.MUTTER M12	TUERCA M12X1,75 U7474 CL8 ZN
37	B07S01212R	CARTER TRASMISSIONE ROT.	ROTOR TRANSMISSION COVER	CARTER TRANSMISSION ROTOR	ROTORANTRIEBABDECKBLECH	C RTER DE TRANSMISI N DE LA RO
38	F01020432R	VITE M8X1,25X16 U5739 8.8ZN	SCR. M8X1,25X16 U5739 8.8ZN	VIS M8 X1,25X16 U5739 8.8 ZN	SCHRAUBE M8X1,25X16U5739 8.8ZN	TORNILLO M8X1,25X16 U5739 8.8
39	B0150560R	COPIGLIA 5X 70 U1336 ZN	GALV PIN	GOUPILLE GALV	SPLINT	PASADOR 5X 70 U1336 ZN
40	B01300355R	DISTANZIALE 40X54X20	SPACER	ENTRETOISE	ABSTANDSTUECK 40X54X20	DISTANCIADOR 40X54X20
48	B00471280R	VITE TTEI M12X 80-10.9 UNBRAKO	SCREW	VIS	SCHRAUBE TTEI M12X 80-8.8	TORNILLO CAB.ALLEN CON HUECO
49	F01410076R	ROS.M12 13X 24X2,5 U6592 ZN	WASHER 12 13X 24X2,5 U6592 ZN	RONDEL. M12 13X24X2,5 U6592 ZN	SCHEIBE M12 13X24X2,5 U6592 ZN	ARAND.M12 13X 24X2,5 U6592 ZN
50	F01230213R	DADO M12X1,75 U7474 CL8 ZN	NUT M12X1,75 U7474 6SZN	ECROU AUTOBL. M12	SELBSTSPERR.MUTTER M12	TUERCA M12X1,75 U7474 CL8 ZN
51	B0H000259R	RACCORDO M6X1 COMPLETO	FITTING OUT M6X1	RACCORD	KUPPLUNG M6X1	RACOR M6X1 COMPLETO
52	B0H0P0029R	TUBETTO NYLON 4 L 180	NYLON HOSE	TUYAU EN NYLON	KLEINS ROHR AUS NYLON	TUBO DE NAILON 4 L 180
53	B03600128R	FRIZIONE PER GRUPPO AFC	COUPLING FRICTION FOR AFC	FRICTION	KUPPLUNG FUER AFC	EMBRAGUE PARA GRUPO AFC
54	B01300150R	SPES. 40 48 1,5 ZINCATO	SHIM GALV	ENTRETOISE GALV	DISTANZSTUECK 40 48 1,5	ESPES. 40 48 1,5 CINCADO
55	B01300151R	SPES. 40 48 2 ZINCATO	SHIM	ENTRETOISE	DISTANZSTUECK 40 48 2	ESPES. 40 48 2 CINCADO
56	B030F0017R	GIUNTO MOLL.N. 26 ISO 12 B - 3	SPRING JOINT N.26 ISO 12 B-3	JOINT RESSORT	KUPPLUNGSSTUCK N. 26 ISO	JUNTA DE MUELLE N. 26 ISO 12 B
57	B01300106R	SPES. 25,5 37 1 ZINCATO	SHIM GALV	ENTRETOISE GALV	DISTANZSTUECK 25,5 37 1	ESPES. 25,5 37 1 CINCADO
58	B01300105R	SPES. 25,5 37 0,5	SHIM	ENTRETOISE	DISTANZSTUECK 25,5 37 0,5	ESPES. 25,5 37 0,5
59	B03600094R	LIMITATORE CON PROLUNGA BYPY	TORQUE LIMITER WITH EXTENSION	LIMITEUR AVEC RALLONGE	UBERLASTKUPPLUNG MIT VERLANGER	LIMITADOR CON PROLONGACI N B

TAV_120

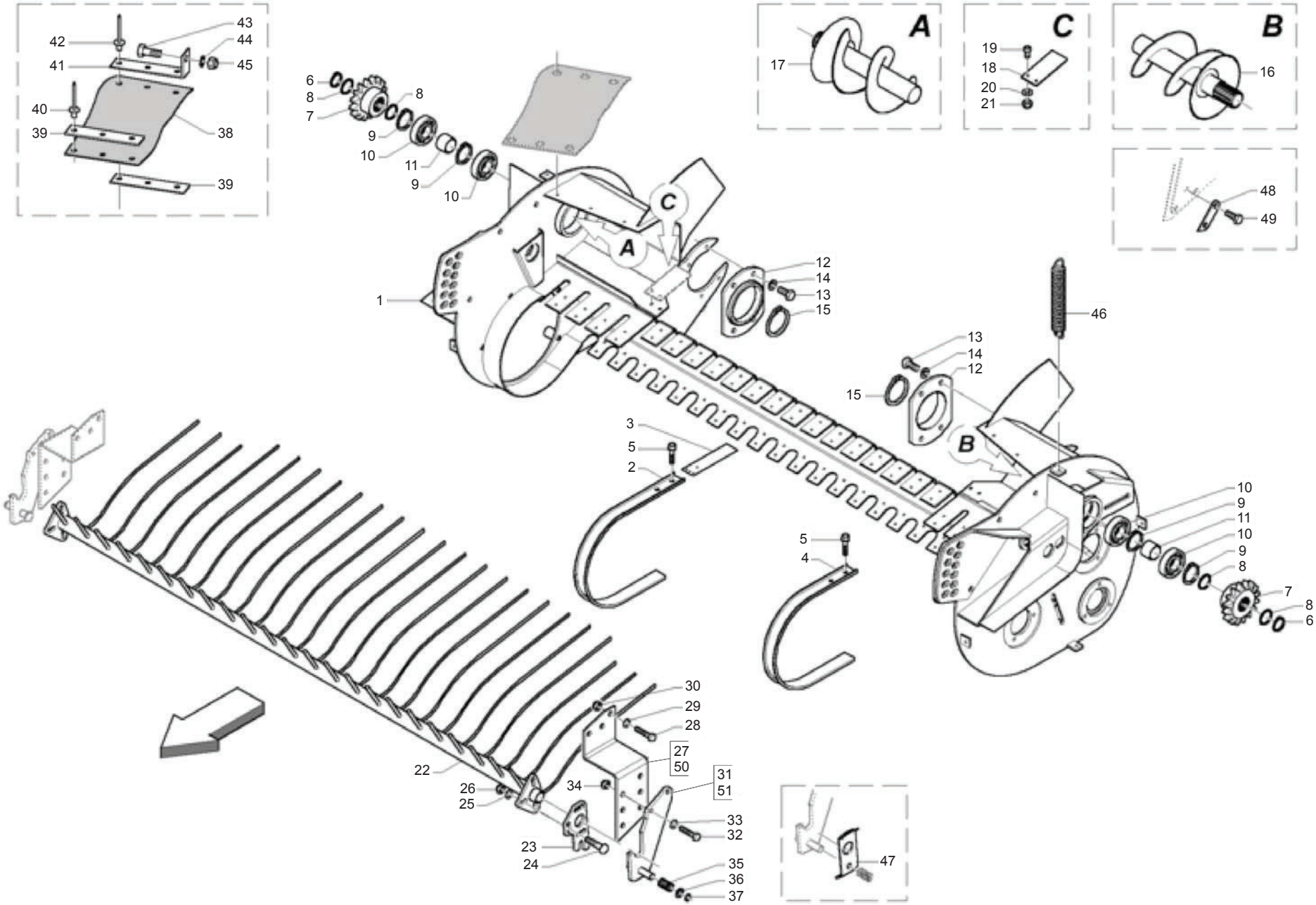

MASCHIO

cod. F07022338

PICK-UP M
PICK-UP M

Pos.	Cod.	Descrizione	Description	Description	Benennung	Descripcion
1	B07S01642R	TELAIO PU M	PICK-UP FRAME M	CHASSIS PU M	PICK-UP RAHMEN M	BASTIDOR PU M
2	B0C003304R	FASCIA CENTRALE PICK UP TOPCUT	PICK-UP CENTRAL BAND TOPCUT	BANDE CENTRALE PICK-UP TOPCUT	ZENTRALES PICK-UP BAND	BANDA CENTRAL PICK UP TOPCUT
3	B0C002069R	COMPENSO FASCIA	BAND EXTENSION	EPAISSEUR BANDE	BANDVERLAENGERUNG	COMPENSADO BANDA
4	B0C003183R	PLACA EXTENSIE LATERALA	LATERAL BAND PICK-UP	BANDE LATERALE	SEITENBAND	PLACA EXTEN-LATERAL
5	B00370615R	VITE M 6X16 ZN SEZ.TRIL. U8111	SCREW	VIS	SCHRAUBE	TORNILLO CAB.HEX M 6X16 A SECC
6	B01700035R	ANEL. D ARR. ALB. 35-E UNI3653	SEEGER RING	BAGUE SEEGER	SEEGERRING 35-E	ANIL. DE PARAD. RB. 35-E UNI3
7	B03400270R	INGR. Z=16-3 4 ISO CON MOZZO	GEAR Z=16 3 4	ENGRANAGE	ZAHNRAD Z=16 3 4	ENGR. Z=16-3 4 ISO CON BUJE
8	B01534416R	SPES. 35 43 1 ZINCATO	SHIM	ENTRETOISE	AUSGLEICHSCHEIBE 35X43X1	ESPES. 35 43 1 CINCADO
9	F02050425R	ANELLO E. DI 80X 2,5 U7437 C70	SEEGER RING D.80	BAGUE SEEGER D.80	SEEGERRING D.80	ANILLO E. DI 80X 2,5 U7437 C70
10	B02040002R	CUSCINETTO 6307-2RS CAT.KST004	BEARING	ROULEMENT CAT.KST004	LAGER 6307-2RS	COJINETE 6307-2RS CAT.KST004
11	B01300739R	DISTANZIALE 35X42X41	SPACER	ENTRETOISE	DISTANZSTUECK 35X42X41	DISTANCIADOR 35X42X41
12	B01300715R	FLANGIA SX PICK-UP	PICK-UP FLANGE	FLASQUE GAUCHE POUR PICK-UP	PICK-UP FLANSCH	BRIDA IZQ PICK-UP
13	B00181015R	VITE M10X1,5 X 16 U5739 8.8ZN	SCREW	VIS	SCHRAUBE	TORNILLO M10X1,5 X 16 U5739 8
14	F01410062R	ROS.M10 10,5X 18X 2 U6592 ZN	WASHER M10 10,5X 18X 2 U6592	RONDELLE M10 10,5X18X2 ZN	DICHTUNGSRING M10 10,5X18X2 ZN	ARAND.M10 10,5X 18X 2 U6592 ZN
15	B01700095R	ANEL. D ARR. ALB. 95-E UNI3653	SEEGER RING	BAGUE SEEGER	SEEGERRING 95-E	ANIL. DE PARAD. RB. 95-E UNI3
16	B07S01652R	COCLEA SX PU 200	LEFT PICK-UP AUGER 200	VIS GAUCHE PU 200	LINKE PICK-UP ZUBRINGERSCHNECK	TORNILLO SIN FIN IZQ PU 200
17	B07S01651R	COCLEA DX PU 200	RIGHT PICK-UP AUGER 200	VIS DROIT PU 200	RECHTE PICK-UP ZUBRINGERSCHNEC	TORNILLO SIN FIN DER PU 200
18	B0C004894R	COMPENSO PER PU NORMALE	PICK-UP SHIM	EPAISSEUR POUR PU NORMAL	PICK-UP AUSGLEICHSTUECK	COMPENSADO PARA PU NORMAL
19	B00470620R	VITE TTEI M 6X 20-8.8 UNBRA	SCREW	VIS	SCHRAUBE TTEI M6X20-10.9	TORNILLO CAB.ALLEN CON HUE
20	F01410037R	ROS.M6 6,4X12,5X1,6 U6592 ZN	WASHER M6 6,4X12,5X1,6 U6592ZN	RONDEL.M6 6,4X12,5X1,6 U6592ZN	SCHEIB.M6 6,4X12,5X1,6 U6592ZN	ARAND.M6 6,4X12,5X1,6 U6592 ZN
21	F01230184R	DADO M6X1 D985 8ZN	NUT M6X1 D985 8ZN			TUERCA M6X1 D985 8
22	B07S01006R	RASTRELLO 200	PICK-UP RAKE 200	RATEAU	NIEDERHALTER 200	RASTRILLO 200
23	B0C003179R	AGGANCIO REGOLAZIONE	ADJUSTER ATTACHMENT	ACCROCHAGE REGLAGE	EINSTELLUNGSANKUPPLUNG	ENGANCHE PARA REGULACI N
24	B00523395R	VITE SPECIALE TTQST M12X45-8.8	SPECIAL SCREW	VIS SPECIALE	SCHRAUBE TTQST M12X 45-8.8	TORNILLO ESPECIAL TTQST M12X4
25	B01522469R	RALLA 13 42 6	FIFTH WHEEL	BUTEE	SCHEIBE	RANGUA 13 42 6
26	F01230213R	DADO M12X1,75 U7474 CL8 ZN	NUT M12X1,75 U7474 6SZN	ECROU AUTOBL. M12	SELBSTSPERR.MUTTER M12	TUERCA M12X1,75 U7474 CL8 ZN
27	B0C000057R	ATTACCO DX RASTRELLO	RIGHT RAKE ATTACHMENT	ATTELAGE DROITE GRILLE RABATTE	RECHTE NIEDERHALTERRECHENHALTE	CONEXI N DER RASTRILLO
28	F01020516R	VITE M12X1,75X45 U5739 8.8ZN	SCR. M12X1,75X45 U5739 8.8ZN	VIS M12X1,75X45 U5739 8.8 ZN	SCHARAUBE M12X1,75X45 U5739 ZN	TORNILLO M12X1,75X45 U5739 8
29	F01410076R	ROS.M12 13X 24X2,5 U6592 ZN	WASHER 12 13X 24X2,5 U6592 ZN	RONDEL. M12 13X24X2,5 U6592 ZN	SCHEIBE M12 13X24X2,5 U6592 ZN	ARAND.M12 13X 24X2,5 U6592 ZN
30	F01230213R	DADO M12X1,75 U7474 CL8 ZN	NUT M12X1,75 U7474 6SZN	ECROU AUTOBL. M12	SELBSTSPERR.MUTTER M12	TUERCA M12X1,75 U7474 CL8 ZN
31	BSP000024R	ATTACCO DX RASTRELLO	RIGHT RAKE CONNECTION			CONEXI N DER RASTRILLO
32	F01020512R	VITE M12X1,75X35 U5739 8.8ZN	SCR. M12X1,75X35 U5739 8.8ZN	VIS M12X1,75X35 5739 8.8 ZN	SCHR. M12X1,75X35 5739 8.8 ZN	TORNILLO M12X1,75X35 U5739 8
33	F01410076R	ROS.M12 13X 24X2,5 U6592 ZN	WASHER 12 13X 24X2,5 U6592 ZN	RONDEL. M12 13X24X2,5 U6592 ZN	SCHEIBE M12 13X24X2,5 U6592 ZN	ARAND.M12 13X 24X2,5 U6592 ZN
34	F01230213R	DADO M12X1,75 U7474 CL8 ZN	NUT M12X1,75 U7474 6SZN	ECROU AUTOBL. M12	SELBSTSPERR.MUTTER M12	TUERCA M12X1,75 U7474 CL8 ZN
35	B01817605R	MOLLA C FILO 2,5 P24,5 L=60	SPRING	RESSORT	C-FEDER	MUELLE C HILO 2,5 P24,5 L=60
36	F01410124R	ROS.M20 21X 37X 3 U6592 ZN	WASHER M20 21X 37X 3 U6592 ZN	RONDEL.M20 21X37X3 ZN	MUTTER M20 21X 37X 3 U6592 ZN	ARAND.M20 21X 37X 3 U6592 ZN
37	B01700020R	ANEL. D ARR. ALB. 20-E UNI3653	SEEGER RING	BAGUE SEEGER	SEEGERRING 20-E	ANIL. DE PARAD. RB. 20-E UNI3
38	B07V00074R	PROT. COCLEA PU 180	AUGER PROTECTION	PROTECTION PELLETEUSE PU 180	SCHNECKENSCHUTZ	PROT. TORNILLO SIN FIN PU 180
39	B0C1P0583R	PIATTINO DI FISSAGGIO	FIXING PLATE			PAT N DE FIJACI N
40	B01000013R	RIVETTO STR. 6X18 U9200A AL	RIVET	RIVET	ABREISSNIETEN 6X18	REMACHE EXTR. 6X18 U9200A A
41	B0C002409R	SOSTEGNO GOMMA PUL	RUBBER SUPPORT	SUPPORT PNEUS	GUMMIHALTER	SOPORTE DE GOMA POL
42	B01000012R	RIVETTO STR. 6,4X22 ACCIAIO	RIVET	RIVET	ABREISSNIETEN 6X26	REMACHE EXTR. 6,4X22 ACERO
43	F01020472R	VITE M10X1,5X25 U5739 8.8ZN	SCR. M10X1,5X25 U5739 8.8ZN	VIS M10X1,5X25 U5739 8.8 ZN	SCHRAUBE M10X1,5X25 U5739 8.8	TORNILLO M10X1,5X25 U5739 8.8
44	F01410062R	ROS.M10 10,5X 18X 2 U6592 ZN	WASHER M10 10,5X 18X 2 U6592	RONDELLE M10 10,5X18X2 ZN	DICHTUNGSRING M10 10,5X18X2 ZN	ARAND.M10 10,5X 18X 2 U6592 ZN
45	F01230202R	DADO M10X 1,5 D985 8 ZN	NUT M10 D985	ECROU AUTOBL. M10	SELBSTSPERR.MUTTER M10	TUERCA M10X 1,5 D985 8
46	B01810412R	MOLLA	SPRING	RESSORT	FEDER	MUELLE
47	B0C000058R	AGGANCIO RASTRELLO	RAKE LINKAGE	ATTELAGE GRILLE RABATTEUR	NIEDERHALTERRECHENANSCHLUSS	ENGANCHE DEL RASTRILLO
48	B0C6P0039R	FERMO PICK-UP NORMALE	STANDARD PICK-UP LOCK	ARRET PICK-UP NORMAL		TOPE PICK-UP NORMAL
49	F01020512R	VITE M12X1,75X35 U5739 8.8ZN	SCR. M12X1,75X35 U5739 8.8ZN	VIS M12X1,75X35 5739 8.8 ZN	SCHR. M12X1,75X35 5739 8.8 ZN	TORNILLO M12X1,75X35 U5739 8
50	B0C000056R	ATTACCO SX RASTRELLO	LEFT RAKE ATTACHMENT	ATTELAGE GAUCHE GRILLE RABATTE	LINKE NIEDERHALTERRECHENHALTER	CONEXI N IZQ RASTRILLO
51	BSP000025R	ATTACCO SX RASTRELLO	LEFT RAKE CONNECTION			CONEXI N IZQ RASTRILLO

TAV_125

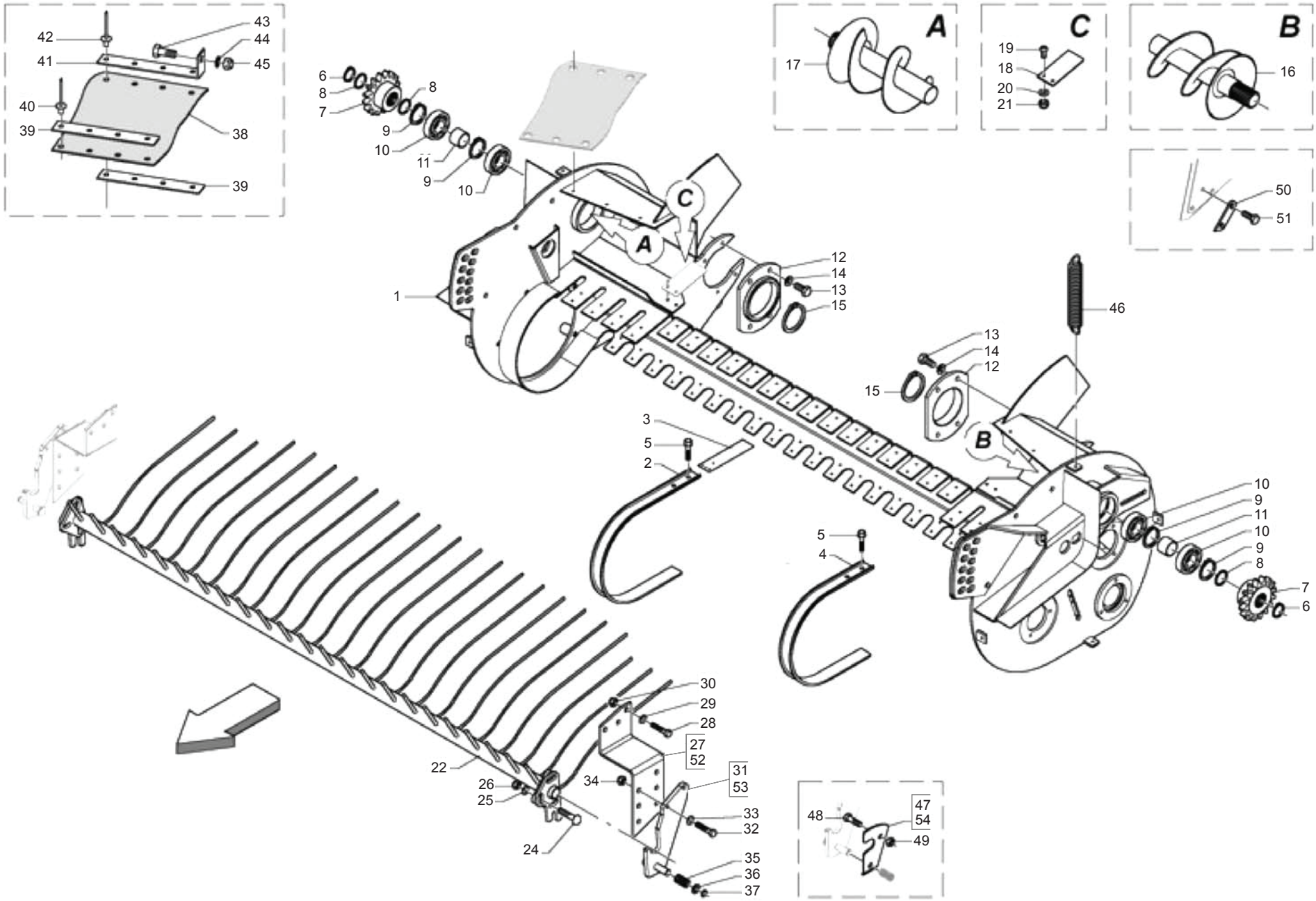

MASCHIO

cod. F07022338

PICK-UP L
PICK-UP L

Pos.	Cod.	Descrizione	Description	Description	Benennung	Descripcion
1	B07S01649R	TELAIO PU L	PICK-UP FRAME L	CHASSIS PU L	PICK-UP RAHMEN L	BASTIDOR PU L
2	B0C003304R	FASCIA CENTRALE PICK UP TOPCUT	PICK-UP CENTRAL BAND TOPCUT	BANDE CENTRALE PICK-UP TOPCUT	ZENTRALES PICK-UP BAND	BANDA CENTRAL PICK UP TOPCUT
3	B0C002069R	COMPENSO FASCIA	BAND EXTENSION	EPAISSEUR BANDE	BANDVERLAENGERUNG	COMPENSADO BANDA
4	B0C003183R	PLACA EXTENSIE LATERALA	LATERAL BAND PICK-UP	BANDE LATERALE	SEITENBAND	PLACA EXTEN-LATERAL
5	B00370615R	VITE M 6X16 ZN SEZ.TRIL. U8111	SCREW	VIS	SCHRAUBE	TORNILLO CAB.HEX M 6X16 A SECC
6	B01700035R	ANEL. D ARR. ALB. 35-E UNI3653	SEEGER RING	BAGUE SEEGER	SEEGERRING 35-E	ANIL. DE PARAD. RB. 35-E UNI3
7	B03400270R	INGR. Z=16-3 4 ISO CON MOZZO	GEAR Z=16 3 4	ENGRANAGE	ZAHNRAD Z=16 3 4	ENGR. Z=16-3 4 ISO CON BUJE
8	B01534416R	SPES. 35 43 1 ZINCATO	SHIM	ENTRETOISE	AUSGLEICHSCHEIBE 35X43X1	ESPES. 35 43 1 CINCADO
9	F02050425R	ANELLO E. DI 80X 2,5 U7437 C70	SEEGER RING D.80	BAGUE SEEGER D.80	SEEGERRING D.80	ANILLO E. DI 80X 2,5 U7437 C70
10	B02040002R	CUSCINETTO 6307-2RS CAT.KST004	BEARING	ROULEMENT CAT.KST004	LAGER 6307-2RS	COJINETE 6307-2RS CAT.KST004
11	B01300739R	DISTANZIALE 35X42X41	SPACER	ENTRETOISE	DISTANZSTUECK 35X42X41	DISTANCIADOR 35X42X41
12	B01300715R	FLANGIA SX PICK-UP	PICK-UP FLANGE	FLASQUE GAUCHE POUR PICK-UP	PICK-UP FLANSCH	BRIDA IZQ PICK-UP
13	B00181015R	VITE M10X1,5 X 16 U5739 8.8ZN	SCREW	VIS	SCHRAUBE	TORNILLO M10X1,5 X 16 U5739 8
14	F01410062R	ROS.M10 10,5X 18X 2 U6592 ZN	WASHER M10 10,5X 18X 2 U6592	RONDELLE M10 10,5X18X2 ZN	DICHTUNGSRING M10 10,5X18X2 ZN	ARAND.M10 10,5X 18X 2 U6592 ZN
15	B01700095R	ANEL. D ARR. ALB. 95-E UNI3653	SEEGER RING	BAGUE SEEGER	SEEGERRING 95-E	ANIL. DE PARAD. RB. 95-E UNI3
16	B07S01654R	COCLEA SX PU 220	LEFT PICK-UP AUGER 220	VIS GAUCHE PU 220	LINKE PICK-UP ZUBRINGERSCHNECK	TORNILLO SIN FIN IZQ PU 220
17	B07S01653R	COCLEA DX PU 220	RIGHT PICK-UP AUGER 220	VIS DROIT PU 220	RECHTE PICK-UP ZUBRINGERSCHNEC	TORNILLO SIN FIN DER PU 220
18	B0C004894R	COMPENSO PER PU NORMALE	PICK-UP SHIM	EPAISSEUR POUR PU NORMAL	PICK-UP AUSGLEICHSTUECK	COMPENSADO PARA PU NORMAL
19	B00470620R	VITE TTEI M 6X 20-8.8 UNBRA	SCREW	VIS	SCHRAUBE TTEI M6X20-10.9	TORNILLO CAB.ALLEN CON HUEC
20	F01410037R	ROS.M6 6,4X12,5X1,6 U6592 ZN	WASHER M6 6,4X12,5X1,6 U6592ZN	RONDEL.M6 6,4X12,5X1,6 U6592ZN	SCHEIB.M6 6,4X12,5X1,6 U6592ZN	ARAND.M6 6,4X12,5X1,6 U6592 ZN
21	F01230184R	DADO M6X1 D985 8ZN	NUT M6X1 D985 8ZN			TUERCA M6X1 D985 8
22	B07S01239R	RASTRELLO 220	RAKE 220	RATEAU 220	NIEDERHALTERRECHEN 220	RASTRILLO 220
24	B00523395R	VITE SPECIALE TTQST M12X45-8.8	SPECIAL SCREW	VIS SPECIALE	SCHRAUBE TTQST M12X 45-8.8	TORNILLO ESPECIAL TTQST M12X4
25	B01522469R	RALLA 13 42 6	FIFTH WHEEL	BUTEE	SCHEIBE	RANGUA 13 42 6
26	F01230213R	DADO M12X1,75 U7474 CL8 ZN	NUT M12X1,75 U7474 6SZN	ECROU AUTOBL. M12	SELBSTSPERR.MUTTER M12	TUERCA M12X1,75 U7474 CL8 ZN
27	B0C000056R	ATTACCO SX RASTRELLO	LEFT RAKE ATTACHMENT	ATTELAGE GAUCHE GRILLE RABATTE	LINKE NIEDERHALTERRECHENHALTER	CONEXI N IZQ RASTRILLO
28	F01020516R	VITE M12X1,75X45 U5739 8.8ZN	SCR. M12X1,75X45 U5739 8.8ZN	VIS M12X1,75X45 U5739 8.8 ZN	SCHARAUBE M12X1,75X45 U5739 ZN	TORNILLO M12X1,75X45 U5739 8
29	F01410076R	ROS.M12 13X 24X2,5 U6592 ZN	WASHER 12 13X 24X2,5 U6592 ZN	RONDEL. M12 13X24X2,5 U6592 ZN	SCHEIBE M12 13X24X2,5 U6592 ZN	ARAND.M12 13X 24X2,5 U6592 ZN
30	F01230213R	DADO M12X1,75 U7474 CL8 ZN	NUT M12X1,75 U7474 6SZN	ECROU AUTOBL. M12	SELBSTSPERR.MUTTER M12	TUERCA M12X1,75 U7474 CL8 ZN
31	BSP000024R	ATTACCO DX RASTRELLO	RIGHT RAKE CONNECTION			CONEXI N DER RASTRILLO
32	F01020512R	VITE M12X1,75X35 U5739 8.8ZN	SCR. M12X1,75X35 U5739 8.8ZN	VIS M12X1,75X35 5739 8.8 ZN	SCHR. M12X1,75X35 5739 8.8 ZN	TORNILLO M12X1,75X35 U5739 8
33	F01410076R	ROS.M12 13X 24X2,5 U6592 ZN	WASHER 12 13X 24X2,5 U6592 ZN	RONDEL. M12 13X24X2,5 U6592 ZN	SCHEIBE M12 13X24X2,5 U6592 ZN	ARAND.M12 13X 24X2,5 U6592 ZN
34	F01230213R	DADO M12X1,75 U7474 CL8 ZN	NUT M12X1,75 U7474 6SZN	ECROU AUTOBL. M12	SELBSTSPERR.MUTTER M12	TUERCA M12X1,75 U7474 CL8 ZN
35	B01817605R	MOLLA C FILO 2,5 P24,5 L=60	SPRING	RESSORT	C-FEDER	MUELLE C HILO 2,5 P24,5 L=60
36	F01410124R	ROS.M20 21X 37X 3 U6592 ZN	WASHER M20 21X 37X 3 U6592 ZN	RONDEL.M20 21X37X3 ZN	MUTTER M20 21X 37X 3 U6592 ZN	ARAND.M20 21X 37X 3 U6592 ZN
37	B01700020R	ANEL. D ARR. ALB. 20-E UNI3653	SEEGER RING	BAGUE SEEGER	SEEGERRING 20-E	ANIL. DE PARAD. RB. 20-E UNI3
38	B07V00081R	PROT. COCLEA PU 200	AUGER GUARD	PROTECTION PELLETEUSE PU 200	SCHNECKENSCHUTZ	PROT. TORNILLO SIN FIN PU 200
39	B0C003730R	FISSAGGIO GOMMA	FIXING PLATE	FIXAGE CAOUTCHOUC	GUMMIFIXIERPLATTE	FIJACI N DE GOMA
40	B01000013R	RIVETTO STR. 6X18 U9200A AL	RIVET	RIVET	ABREISSNIETEN 6X18	REMACHE EXTR. 6X18 U9200A A
41	B0C003729R	SOSTEGNO GOMMA	RUBBER SUPPORT	SUPPORT CAOUTCHOUC	GUMMIHALTER	SOPORTE DE GOMA
42	B01000012R	RIVETTO STR. 6,4X22 ACCIAIO	RIVET	RIVET	ABREISSNIETEN 6X26	REMACHE EXTR. 6,4X22 ACERO
43	F01020472R	VITE M10X1,5X25 U5739 8.8ZN	SCR. M10X1,5X25 U5739 8.8ZN	VIS M10X1,5X25 U5739 8.8 ZN	SCHRAUBE M10X1,5X25 U5739 8.8	TORNILLO M10X1,5X25 U5739 8.8
44	F01410062R	ROS.M10 10,5X 18X 2 U6592 ZN	WASHER M10 10,5X 18X 2 U6592	RONDELLE M10 10,5X18X2 ZN	DICHTUNGSRING M10 10,5X18X2 ZN	ARAND.M10 10,5X 18X 2 U6592 ZN
45	F01230202R	DADO M10X 1,5 D985 8 ZN	NUT M10 D985	ECROU AUTOBL. M10	SELBSTSPERR.MUTTER M10	TUERCA M10X 1,5 D985 8
46	B01810412R	MOLLA	SPRING	RESSORT	FEDER	MUELLE
47	BSP000027R	STAFFA SX	LEFT BRACKET			ESTRIBO IZQ
48	F01020562R	VITE M16X2X30 U5739 8.8ZN	SCR. M16X2X30 U5739 8.8ZN	VIS M16X2X30 U5739 8.8 ZN	SCHRAUBE M16X2X30 U5739 8.8 ZN	TORNILLO M16X2X30 U5739 8.8ZN
49	F01200444R	DADO M16X2 U5589 CL8 ZN 6SZN	NUT M16X2 U5589 6SZN	ECROU M16X2	MUTTER M16X2	TUERCA M16X2 U5589 CL8 ZN 6S
50	B0C6P0039R	FERMO PICK-UP NORMALE	STANDARD PICK-UP LOCK	ARRET PICK-UP NORMAL		TOPE PICK-UP NORMAL
51	F01020512R	VITE M12X1,75X35 U5739 8.8ZN	SCR. M12X1,75X35 U5739 8.8ZN	VIS M12X1,75X35 5739 8.8 ZN	SCHR. M12X1,75X35 5739 8.8 ZN	TORNILLO M12X1,75X35 U5739 8
52	B0C000057R	ATTACCO DX RASTRELLO	RIGHT RAKE ATTACHMENT	ATTELAGE DROITE GRILLE RABATTE	RECHTE NIEDERHALTERRECHENHALTE	CONEXI N DER RASTRILLO
53	BSP000025R	ATTACCO SX RASTRELLO	LEFT RAKE CONNECTION			CONEXI N IZQ RASTRILLO
54	B0C003727R	AGGANCIO DX	RIGHT RAKE LINKAGE	ACCROCHAGE DROIT	RECHTER NIEDERHALTERRECHENANSC	ENGANCHE DER

TAV_130

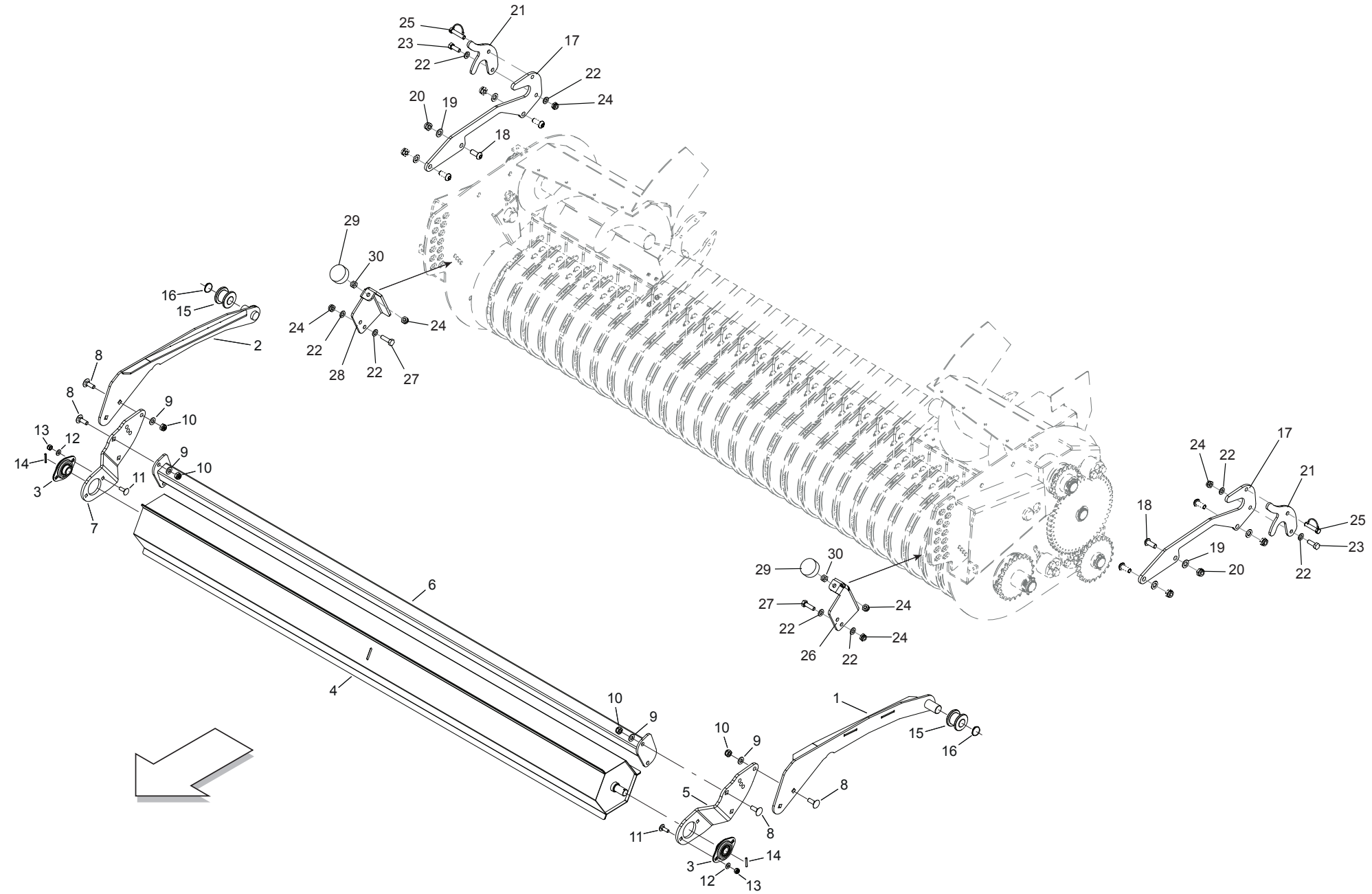

MASCHIO

cod. F07022338

RULLO CONVOGLIATORE (PICK-UP L - PARTE 1)
ROLLER CONVEYOR (PICK-UP L - PART 1)

TAV_130

Pos.	Cod.	Descrizione	Description	Description	Benennung	Descripcion
1	B07SP0446R	FIANCO SX	LEFT SIDE			LADO IZQ
2	B07SP0447R	FIANCO DX	RIGHT SIDE			LADO DER
3	B02341020R	SUPP.FLANG.OV 20 LAM NBR-NSK	SUPPORT	SUPPORT	GEFLANSCHTES LAGER	SOP.BRIDA.OV 20 CHAP. NBR-NSK
4	B07SP0448R	RULLO CONVOGLIATORE L 200	ROLLER CONVEYOR			RODILLO TRANSPORTADOR L 200
5	B0C1P2088R	ATTACCO SX RULLO	LEFT ATTACK ROLLER			CONEXI N IZQ DEL RODILLO
6	B07SP1462R	TUBO DI RINFORZO	REINFORCE TUBE			TUBO DE REFUERZO
7	B0C1P2089R	ATTACCO DX RULLO	RIGHT ATTACK ROLLER			CONEXI N DER DEL RODILLO
8	F01060069R	VITE M10X1,5X30 U5731 8.8ZN	SCR. M10X1,5X30 U5732 4.6ZN	BOULON 10X30 5732 4.6	SCHRAUBE 10X30 5732 4.6	TORNILLO M10X1,5X30 U5731 8.8
9	F01410064R	ROS.M10 10,5X 20X 2 U6592 ZN	WASHER M10 10,5X20X2 U6592 ZN	RONDEL. M10 10,5X20X2 U6592 ZN	SCHEIBE M10 10,5X20X2 U6592 ZN	ARAND.M10 10,5X 20X 2 U6592 ZN
10	F01230202R	DADO M10X 1,5 D985 8 ZN	NUT M10 D985	ECROU AUTOBL. M10	SELBSTSPERR.MUTTER M10	TUERCA M10X 1,5 D985 8
11	F01060202R	VITE M8X1,25X25 U5731 4.6ZN	SCR. M8X1,25X25 U5731 4.6ZN	VIS M8X1,25X25 U5731 4.6	DUEBEL M8X1,25X25 U5731 4.6 ZN	TORNILLO M8X1,25X25 U5731 4.6
12	F01410051R	ROS.M8 8,4X 17X1,6 U6592 ZN	WASHER M8 8,4X17X1,6 U6592 ZN	RONDELLE M8 8,4X17X1,6 ZN	SCHEIBE M8 8,4X17X1,6 U6592 ZN	ARAND.M8 8,4X 17X1,6 U6592 ZN
13	F01230190R	DADO M8X1 D985 8ZN	NUT M8X1 D985 8ZN	ECROU M8	MUTTER M8	TUERCA M8X1 D985 8
14	F02100065R	SPINA E.P. 4X 30 U6873 C70 BR	PIN EL. 4X30 DIN 1481	GOUPILLE EL.4 X30 DIN 1481	SPANNSTIFT 4X30 DIN 1481	CLAVIJA EL.P. 4X 30 U6873 C70
15	B0C003712R	BOCCOLA	BUSH	COQUILLE	BUCHSE	CASQUILLO
16	F02050101R	ANELLO E. DE 25X 1,2 U7435 C7	SEEGER RING E. 25X1,2 7435 C70	SEEGER E. 25X 1,2 U7435 C70	SEEGERING E. 25X 1,2 U7435 C70	ANILLO E. DE 25X 1,2 U7435 C7
17	B0C4P0466R	ATTACCO SOSTEGNO RULLO	ATTACK ROLLER SUPPORT			CONEXI N SOPORTE DE RODILLO
18	B00471230R	VITE TTEI M12X 30-8.8 UNBRA	SCREW	VIS	SCHRAUBE TTEI M12X 30-8.8	TORNILLO CAB.ALLEN CON HUECO
19	F01410076R	ROS.M12 13X 24X2,5 U6592 ZN	WASHER 12 13X 24X2,5 U6592 ZN	RONDEL. M12 13X24X2,5 U6592 ZN	SCHEIBE M12 13X24X2,5 U6592 ZN	ARAND.M12 13X 24X2,5 U6592 ZN
20	F01230213R	DADO M12X1,75 U7474 CL8 ZN	NUT M12X1,75 U7474 6SZN	ECROU AUTOBL. M12	SELBSTSPERR.MUTTER M12	TUERCA M12X1,75 U7474 CL8 ZN
21	B0C6P0487R	GANCIO PER FIANCO SX-DX	HOOK LEFT RIGHT SIDE			GANCHO PARA LADO IZQ-DER
22	F01410064R	ROS.M10 10,5X 20X 2 U6592 ZN	WASHER M10 10,5X20X2 U6592 ZN	RONDEL. M10 10,5X20X2 U6592 ZN	SCHEIBE M10 10,5X20X2 U6592 ZN	ARAND.M10 10,5X 20X 2 U6592 ZN
23	F01020476R	VITE M10X1,5X30 U5739 8.8ZN	SCR. M10X1,5X30 U5739 8.8ZN	VIS M10X1,5X30 U5739 8.8 ZN	SCHRAUBE M10X1,5X30U5739 8.8ZN	TORNILLO M10X1,5X30 U5739 8.8
24	F01230202R	DADO M10X 1,5 D985 8 ZN	NUT M10 D985	ECROU AUTOBL. M10	SELBSTSPERR.MUTTER M10	TUERCA M10X 1,5 D985 8
25	B01000021R	SPINOTTO PER MOTOZAPPA 10X45	PIN	EPINE	STIFT	ESP RRAGO PARA MOTOCULTIVAD
26	B0C6P0488R	ATTACCO TAMPONE SX	LEFT BUFFER CONNECTION			ENGANCHE TAP N IZQ
27	F01020479R	VITE M10X1,5X35 U5739 8.8ZN	SCR. M10X1,5X35 U5739 8.8ZN	VIS M10X1,5X35 U5739 8.8 ZN	SCHR. M10X1,5X35 U5739 8.8 ZN	TORNILLO M10X1,5X35 U5739 8
28	B0C6P0489R	ATTACCO TAMPONE DX	RIGHT BUFFER CONNECTION			ENGANCHE TAP N DER
29	B07049749R	TAMPONE 50X21 M10	BUMPER 50X21 M10	TAMPON 50X21 M10	PUFFER 50X21 M10	TAP N 50X21 M10
30	F01200270R	DADO M10X1,5 U5588 CL8 ZN	NUT M10X1,5 U5588 6.8ZN	ECROU M10X 1,5 U5588 6.8 ZN	MUTTER M10X 1,5 U5588 6.8 ZN	TUERCA M10X1,5 U5588 CL8 ZN

TAV_135

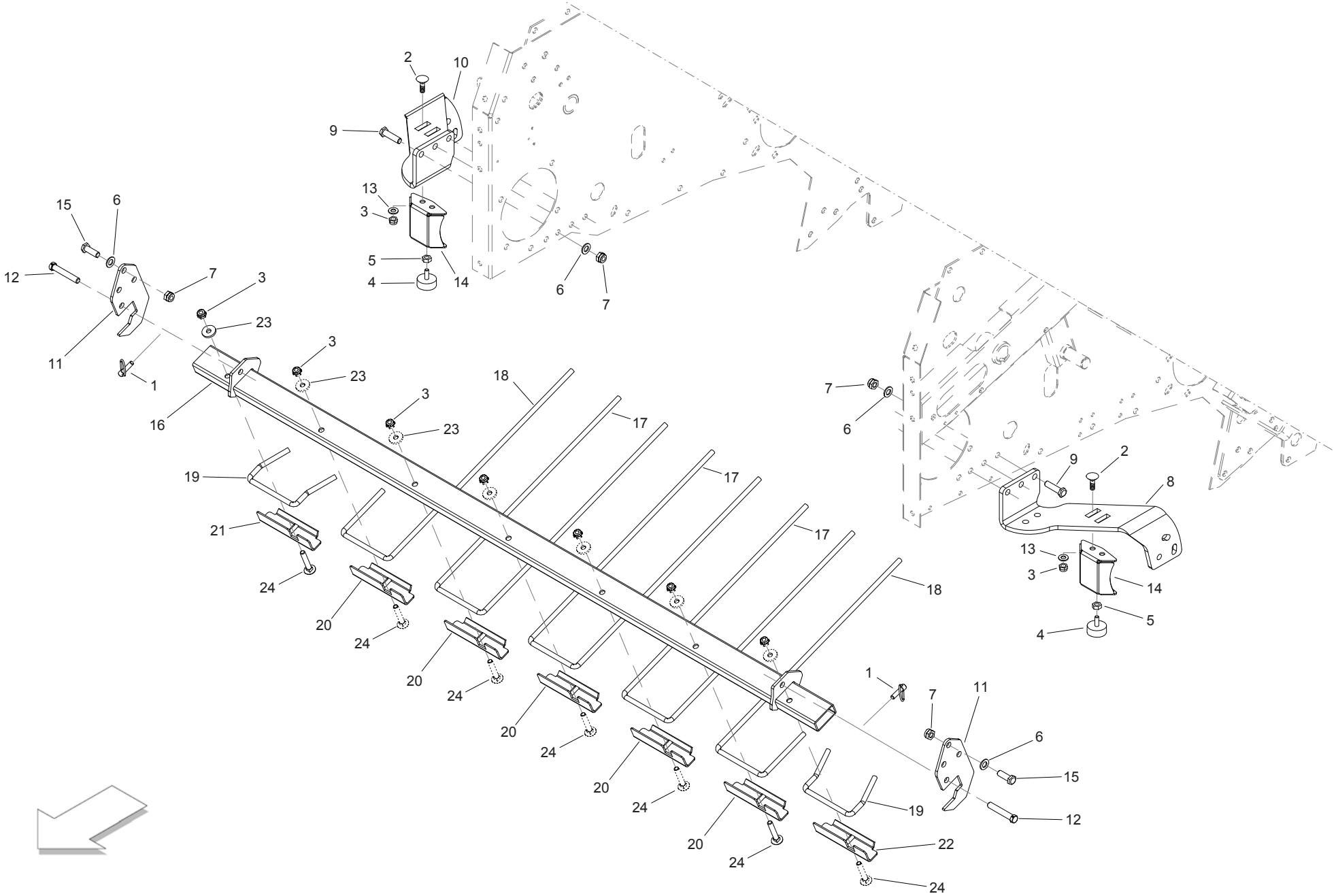

MASCHIO

cod. F07022338

RULLO CONVOGLIATORE (PICK-UP L - PARTE 2)
ROLLER CONVEYOR (PICK-UP L - PART 2)

TAV_135

Pos.	Cod.	Descrizione	Description	Description	Benennung	Descripcion
1	F02200486R	SPINA SCATTO D.6 X27 ZN	SNAP PIN D.6 X27 ZN	FICHE A DETENTE D6 X 27 ZN	EINRASTSTIFT D6 X 27 ZN	CLAVIJA CON DISPARO D.6 X27
2	F01060069R	VITE M10X1,5X30 U5731 8.8ZN	SCR. M10X1,5X30 U5732 4.6ZN	BOULON 10X30 5732 4.6	SCHRAUBE 10X30 5732 4.6	TORNILLO M10X1,5X30 U5731 8.8
3	F01230202R	DADO M10X 1,5 D985 8 ZN	NUT M10 D985	ECROU AUTOBL. M10	SELBSTSPERR.MUTTER M10	TUERCA M10X 1,5 D985 8
4	B07049749R	TAMPONE 50X21 M10	BUMPER 50X21 M10	TAMPON 50X21 M10	PUFFER 50X21 M10	TAP N 50X21 M10
5	F01200270R	DADO M10X1,5 U5588 CL8 ZN	NUT M10X1,5 U5588 6.8ZN	ECROU M10X 1,5 U5588 6.8 ZN	MUTTER M10X 1,5 U5588 6.8 ZN	TUERCA M10X1,5 U5588 CL8 ZN
6	F01410076R	ROS.M12 13X 24X2,5 U6592 ZN	WASHER 12 13X 24X2,5 U6592 ZN	RONDEL. M12 13X24X2,5 U6592 ZN	SCHEIBE M12 13X24X2,5 U6592 ZN	ARAND.M12 13X 24X2,5 U6592 ZN
7	F01230213R	DADO M12X1,75 U7474 CL8 ZN	NUT M12X1,75 U7474 6SZN	ECROU AUTOBL. M12	SELBSTSPERR.MUTTER M12	TUERCA M12X1,75 U7474 CL8 ZN
8	B0C1P2081R	ATTACCO SX	LEFT ATTACK			ENGANCHE IZQ
9	F01020516R	VITE M12X1,75X45 U5739 8.8ZN	SCR. M12X1,75X45 U5739 8.8ZN	VIS M12X1,75X45 U5739 8.8 ZN	SCHARAUBE M12X1,75X45 U5739 ZN	TORNILLO M12X1,75X45 U5739 8
10	B0C1P2082R	ATTACCO DX	RIGHT ATTACK			ENGANCHE DER
11	B0C1P1462R	UNIONE STAFFE-BARRA PORTADENTE	UNION BRACKETS-ROD SUPP.TEETH			UNI N ESTRIBOS BARRA PORTA-DIE
12	B0C1P1632R	PERNO D.12 F.6	PIN D.12 F.6			PERNO D.12 F.6
13	F01410064R	ROS.M10 10,5X 20X 2 U6592 ZN	WASHER M10 10,5X20X2 U6592 ZN	RONDEL. M10 10,5X20X2 U6592 ZN	SCHEIBE M10 10,5X20X2 U6592 ZN	ARAND.M10 10,5X 20X 2 U6592 ZN
14	B0C1P2087R	ATTACCO TAMPONE	ATTACK BUFFER			CONEXI N DEL TAP N
15	F01020512R	VITE M12X1,75X35 U5739 8.8ZN	SCR. M12X1,75X35 U5739 8.8ZN	VIS M12X1,75X35 5739 8.8 ZN	SCHR. M12X1,75X35 5739 8.8 ZN	TORNILLO M12X1,75X35 U5739 8
16	B07SP0701R	BARRA PORTADENTI	TINE HOLDER BAR			BARRA PORTADIENTES
17	B0C2P0383R	DENTE L=590	TOOTH L=590			DENTE L=590
18	B0C2P0384R	DENTE L=590 E L=137	TOOTH L=590 E L=137			DENTE L=590 E L=137
19	B0C2P0385R	DENTE LATERALE L=111	LATERAL TOOTH			DIENTE LATERAL L=111
20	B0C6P0483R	FERMO DENTE	TOOTH STOP			TOPE DEL DIENTE
21	B0C6P0888R	FERMO DX DENTE	RIGHT TOOTH STOP			TOPE DER DIENTE
22	B0C6P0887R	FERMO SX DENTE	LEFT TOOTH STOP			TOPE IZQ DEL DIENTE
23	B01524584R	RALLA 10,5 30 4	FIFTH WHEEL	BUTEE	SCHEIBE	RANGUA 10,5 30 4
24	F01060081R	VITE M10X1,5X60 U5731 8.8ZN	SCR. M10X1,5X60 U5732 4.6ZN	VIS 10X60 5732 4.6 ZN	SCHRAUBE 10X60 5732 4.6 ZN	TORNILLO M10X1,5X60 U5731 8.8

TAV_140

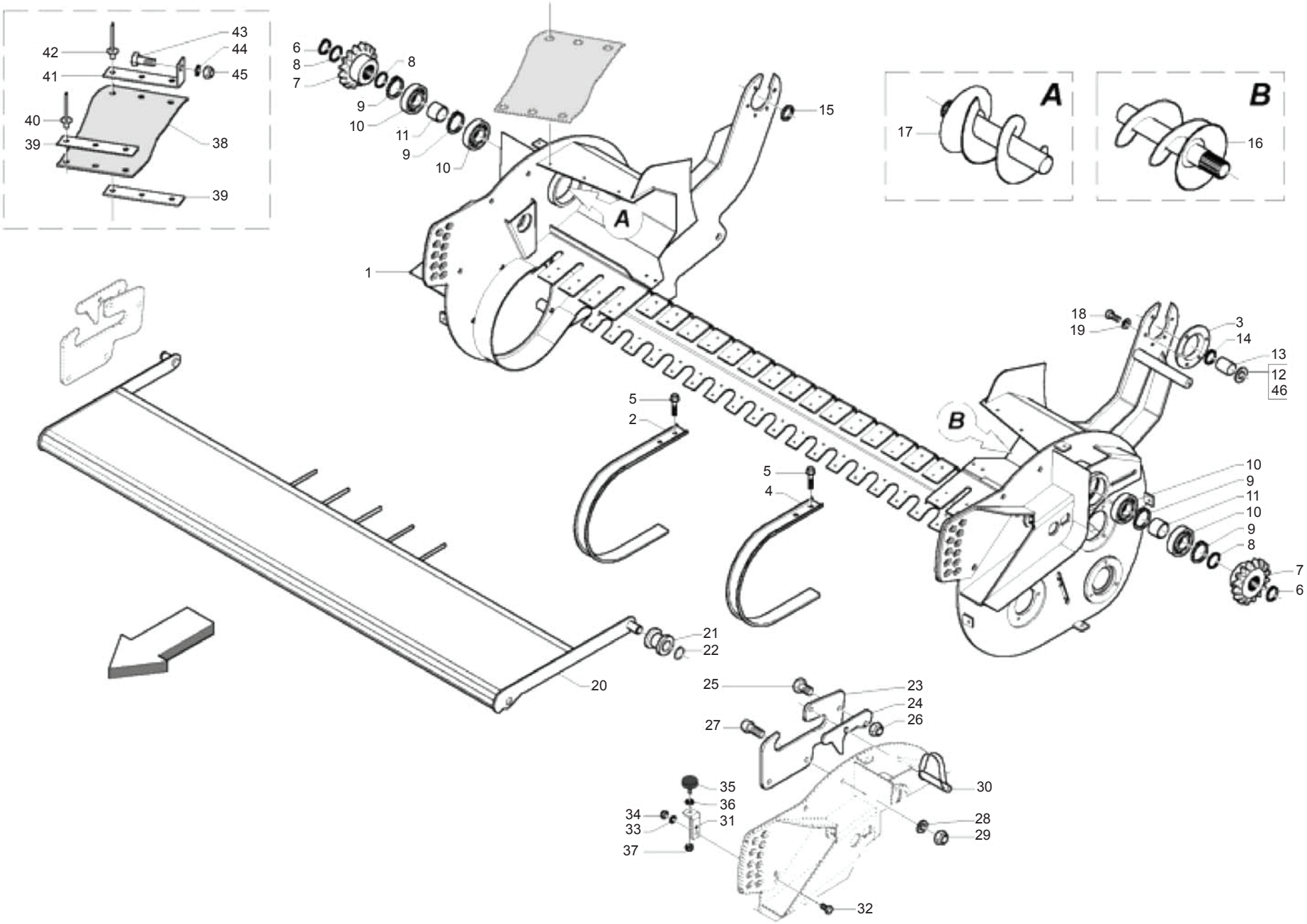

MASCHIO

cod. F07022338

PICK-UP M CUT
PICK-UP M CUT

TAV_140

Pos.	Cod.	Descrizione	Description	Description	Benennung	Descripcion
1	B07S01645R	TELAIO PU M CUT	PICK_UP FRAME M CUT			BASTIDOR PU M CUT
2	B0C003304R	FASCIA CENTRALE PICK UP TOPCUT	PICK-UP CENTRAL BAND TOPCUT	BANDE CENTRALE PICK-UP TOPCUT	ZENTRALES PICK-UP BAND	BANDA CENTRAL PICK UP TOPCUT
3	B01300649R	FLANGIA	FLANGE	FLASQUE	PICK-UP FLANSCH	BRIDA
4	B0C003183R	PLACA EXTENSIE LATERALA	LATERAL BAND PICK-UP	BANDE LATERALE	SEITENBAND	PLACA EXTEN-LATERAL
5	B00370615R	VITE M 6X16 ZN SEZ.TRIL. U8111	SCREW	VIS	SCHRAUBE	TORNILLO CAB.HEX M 6X16 A SECC
6	B01700035R	ANEL. D ARR. ALB. 35-E UNI3653	SEEGER RING	BAGUE SEEGER	SEEGERRING 35-E	ANIL. DE PARAD. RB. 35-E UNI3
7	B03400270R	INGR. Z=16-3 4 ISO CON MOZZO	GEAR Z=16 3 4	ENGRANAGE	ZAHNRAD Z=16 3 4	ENGR. Z=16-3 4 ISO CON BUJE
8	B01534416R	SPES. 35 43 1 ZINCATO	SHIM	ENTRETOISE	AUSGLEICHSCHEIBE 35X43X1	ESPES. 35 43 1 CINCADO
9	F02050425R	ANELLO E. DI 80X 2,5 U7437 C70	SEEGER RING D.80	BAGUE SEEGER D.80	SEEGERRING D.80	ANILLO E. DI 80X 2,5 U7437 C70
10	B02040002R	CUSCINETTO 6307-2RS CAT.KST004	BEARING	ROULEMENT CAT.KST004	LAGER 6307-2RS	COJINETE 6307-2RS CAT.KST004
11	B01300739R	DISTANZIALE 35X42X41	SPACER	ENTRETOISE	DISTANZSTUECK 35X42X41	DISTANCIADOR 35X42X41
12	B01527654R	RALLA 45 62 4	FIFTH WHEEL	BUTEE	SCHEIBE	RANGUA 45 62 4
13	B02500010R	BRONZINA 45 53 25	BUSHING	COUSSINET	BRONZEBUCHSE 45 53 25	COJINETE 45 53 25
14	B01700045R	ANEL. D ARR. ALB. 45-E UNI3653	SEEGER RING	BAGUE SEEGER	SEEGERRING 45-E	ANIL. DE PARAD. RB. 45-E UNI3
15	B01300003R	RALLA ATTACCO PU	WASHER ATTACK PICK-UP			RANGUA CONEXI N PU
16	B07S01652R	COCLEA SX PU 200	LEFT PICK-UP AUGER 200	VIS GAUCHE PU 200	LINKE PICK-UP ZUBRINGERSCHNECK	TORNILLO SIN FIN IZQ PU 200
17	B07S01651R	COCLEA DX PU 200	RIGHT PICK-UP AUGER 200	VIS DROIT PU 200	RECHTE PICK-UP ZUBRINGERSCHNEC	TORNILLO SIN FIN DER PU 200
18	F01020472R	VITE M10X1,5X25 U5739 8.8ZN	SCR. M10X1,5X25 U5739 8.8ZN	VIS M10X1,5X25 U5739 8.8 ZN	SCHRAUBE M10X1,5X25 U5739 8.8	TORNILLO M10X1,5X25 U5739 8.8
19	F01410062R	ROS.M10 10,5X 18X 2 U6592 ZN	WASHER M10 10,5X 18X 2 U6592	RONDELLE M10 10,5X18X2 ZN	DICHTUNGSRING M10 10,5X18X2 ZN	ARAND.M10 10,5X 18X 2 U6592 ZN
20	B07S01849R	LAMIERA CONVOGLIAMENTO PU M	BAFFLE PLATE	TOLE DE TRANSPORT PU M	NIEDERHALTERBLECH	CHAPA DE TRANSPORTE PU M
21	B0C003712R	BOCCOLA	BUSH	COQUILLE	BUCHSE	CASQUILLO
22	F02050101R	ANELLO E. DE 25X 1,2 U7435 C7	SEEGER RING E. 25X1,2 7435 C70	SEEGER E. 25X 1,2 U7435 C70	SEEGERING E. 25X 1,2 U7435 C70	ANILLO E. DE 25X 1,2 U7435 C7
23	B0C100017R	ATTACCO LAMIERA CONVOGLIAMENTO	CONVEYOR PLATE ATTACHMENT	ATTELAGE TOLE D ACHEMINEMENT	ZUFUEHRBLECHBEFESTIGUNG	CONEXI N CHAPA DE TRANSPORTE
24	B0C004002R	GANCIO	HOOK	CROCHET	HAKEN	GANCHO
25	F01020510R	VITE M12X1,75X30 U5739 8.8ZN	SCR. M12X1,75X30 U5739 8.8ZN	VIS M12X1,75X30 U5739 8.8ZN	SCHRAU.M12X1,75X30 U5739 8.8ZN	TORNILLO M12X1,75X30 U5739
26	F01230213R	DADO M12X1,75 U7474 CL8 ZN	NUT M12X1,75 U7474 6SZN	ECROU AUTOBL. M12	SELBSTSPERR.MUTTER M12	TUERCA M12X1,75 U7474 CL8 ZN
27	B00471230R	VITE TTEI M12X 30-8.8 UNBRA	SCREW	VIS	SCHRAUBE TTEI M12X 30-8.8	TORNILLO CAB.ALLEN CON HUECO
28	F01410076R	ROS.M12 13X 24X2,5 U6592 ZN	WASHER 12 13X 24X2,5 U6592 ZN	RONDEL. M12 13X24X2,5 U6592 ZN	SCHEIBE M12 13X24X2,5 U6592 ZN	ARAND.M12 13X 24X2,5 U6592 ZN
29	F01230213R	DADO M12X1,75 U7474 CL8 ZN	NUT M12X1,75 U7474 6SZN	ECROU AUTOBL. M12	SELBSTSPERR.MUTTER M12	TUERCA M12X1,75 U7474 CL8 ZN
30	B01000021R	SPINOTTO PER MOTOZAPPA 10X45	PIN	EPINE	STIFT	ESP RRAGO PARA MOTOCULTIVAD
31	B0C005187R	ATTACCO TAMPONE	PLUG ATTACHMENT	ATTELAGE TAMPON	PROPFENBEFESTIGUNG	CONEXI N DEL TAP N
32	F01020476R	VITE M10X1,5X30 U5739 8.8ZN	SCR. M10X1,5X30 U5739 8.8ZN	VIS M10X1,5X30 U5739 8.8 ZN	SCHRAUBE M10X1,5X30U5739 8.8ZN	TORNILLO M10X1,5X30 U5739 8.8
33	F01410062R	ROS.M10 10,5X 18X 2 U6592 ZN	WASHER M10 10,5X 18X 2 U6592	RONDELLE M10 10,5X18X2 ZN	DICHTUNGSRING M10 10,5X18X2 ZN	ARAND.M10 10,5X 18X 2 U6592 ZN
34	F01230202R	DADO M10X 1,5 D985 8 ZN	NUT M10 D985	ECROU AUTOBL. M10	SELBSTSPERR.MUTTER M10	TUERCA M10X 1,5 D985 8
35	B07049749R	TAMPONE 50X21 M10	BUMPER 50X21 M10	TAMPON 50X21 M10	PUFFER 50X21 M10	TAP N 50X21 M10
36	F01200270R	DADO M10X1,5 U5588 CL8 ZN	NUT M10X1,5 U5588 6.8ZN	ECROU M10X 1,5 U5588 6.8 ZN	MUTTER M10X 1,5 U5588 6.8 ZN	TUERCA M10X1,5 U5588 CL8 ZN
37	F01230202R	DADO M10X 1,5 D985 8 ZN	NUT M10 D985	ECROU AUTOBL. M10	SELBSTSPERR.MUTTER M10	TUERCA M10X 1,5 D985 8
38	B07V00074R	PROT. COCLEA PU 180	AUGER PROTECTION	PROTECTION PELLETEUSE PU 180	SCHNECKENSCHUTZ	PROT. TORNILLO SIN FIN PU 180
39	B0C1P0583R	PIATTINO DI FISSAGGIO	FIXING PLATE			PAT N DE FIJACI N
40	B01000013R	RIVETTO STR. 6X18 U9200A AL	RIVET	RIVET	ABREISSNIETEN 6X18	REMACHE EXTR. 6X18 U9200A A
41	B0C002409R	SOSTEGNO GOMMA PUL	RUBBER SUPPORT	SUPPORT PNEUS	GUMMIHALTER	SOPORTE DE GOMA POL
42	B01000012R	RIVETTO STR. 6,4X22 ACCIAIO	RIVET	RIVET	ABREISSNIETEN 6X26	REMACHE EXTR. 6,4X22 ACERO
43	F01020472R	VITE M10X1,5X25 U5739 8.8ZN	SCR. M10X1,5X25 U5739 8.8ZN	VIS M10X1,5X25 U5739 8.8 ZN	SCHRAUBE M10X1,5X25 U5739 8.8	TORNILLO M10X1,5X25 U5739 8.8
44	F01410062R	ROS.M10 10,5X 18X 2 U6592 ZN	WASHER M10 10,5X 18X 2 U6592	RONDELLE M10 10,5X18X2 ZN	DICHTUNGSRING M10 10,5X18X2 ZN	ARAND.M10 10,5X 18X 2 U6592 ZN
45	F01230202R	DADO M10X 1,5 D985 8 ZN	NUT M10 D985	ECROU AUTOBL. M10	SELBSTSPERR.MUTTER M10	TUERCA M10X 1,5 D985 8
46	B01547230R	SPES. 45 62 2	SHIM	ENTRETOISE	SCHEIBE	ESPES. 45 62 2

TAV_145

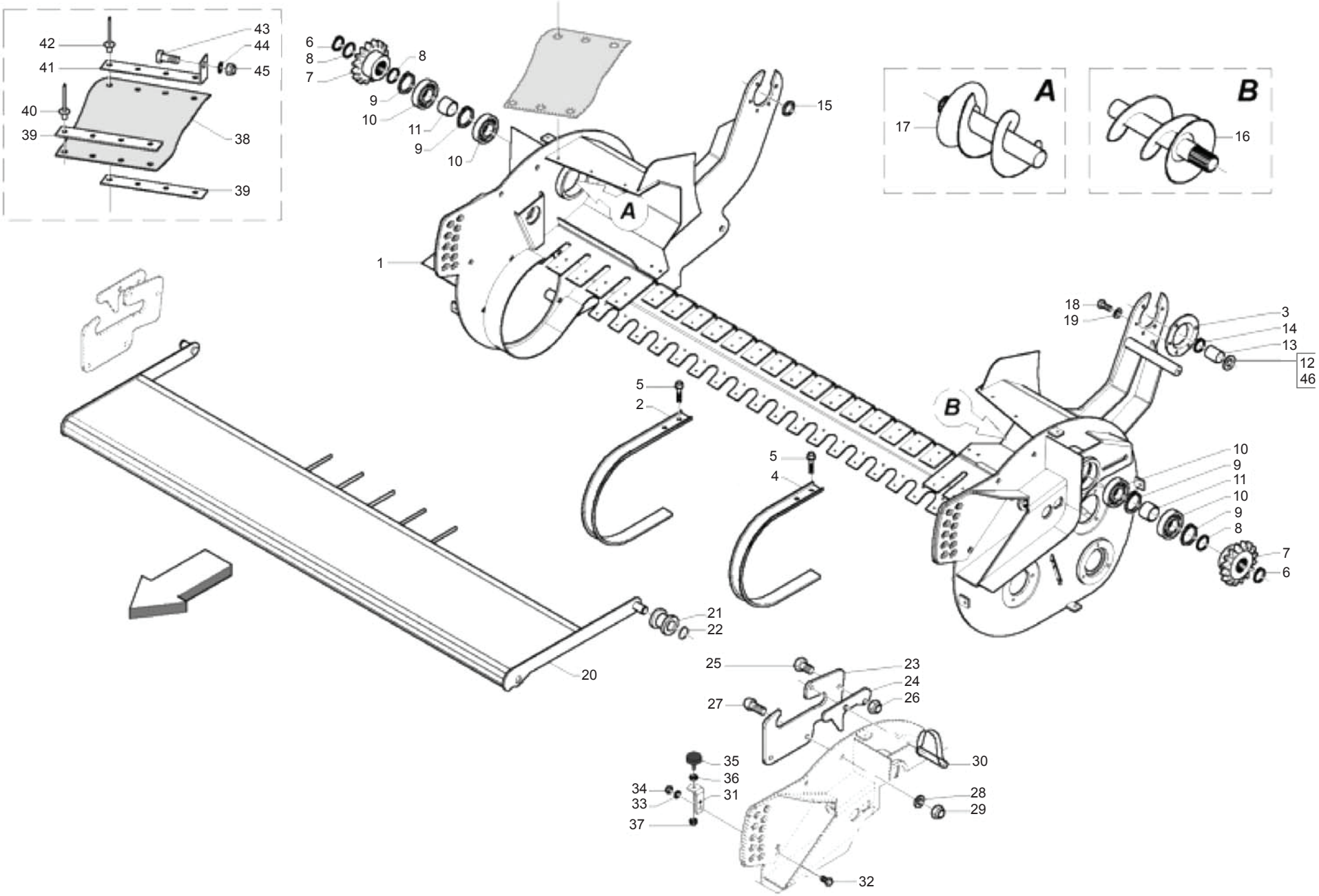

MASCHIO

cod. F07022338

PICK-UP L CUT
PICK-UP L CUT

TAV_145

Pos.	Cod.	Descrizione	Description	Description	Benennung	Descripcion
1	B07S01650R	TELAIO PU L CUT	PICK-UP FRAME CUT			BASTIDOR PU L CUT
2	B0C003304R	FASCIA CENTRALE PICK UP TOPCUT	PICK-UP CENTRAL BAND TOPCUT	BANDE CENTRALE PICK-UP TOPCUT	ZENTRALES PICK-UP BAND	BANDA CENTRAL PICK UP TOPCUT
3	B01300649R	FLANGIA	FLANGE	FLASQUE	PICK-UP FLANSCH	BRIDA
4	B0C003183R	PLACA EXTENSIE LATERALA	LATERAL BAND PICK-UP	BANDE LATERALE	SEITENBAND	PLACA EXTEN-LATERAL
5	B00370615R	VITE M 6X16 ZN SEZ.TRIL. U8111	SCREW	VIS	SCHRAUBE	TORNILLO CAB.HEX M 6X16 A SECC
6	B01700035R	ANEL. D ARR. ALB. 35-E UNI3653	SEEGER RING	BAGUE SEEGER	SEEGERRING 35-E	ANIL. DE PARAD. RB. 35-E UNI3
7	B03400270R	INGR. Z=16-3 4 ISO CON MOZZO	GEAR Z=16 3 4	ENGRANAGE	ZAHNRAD Z=16 3 4	ENGR. Z=16-3 4 ISO CON BUJE
8	B01534416R	SPES. 35 43 1 ZINCATO	SHIM	ENTRETOISE	AUSGLEICHSCHEIBE 35X43X1	ESPES. 35 43 1 CINCADO
9	F02050425R	ANELLO E. DI 80X 2,5 U7437 C70	SEEGER RING D.80	BAGUE SEEGER D.80	SEEGERRING D.80	ANILLO E. DI 80X 2,5 U7437 C70
10	B02040002R	CUSCINETTO 6307-2RS CAT.KST004	BEARING	ROULEMENT CAT.KST004	LAGER 6307-2RS	COJINETE 6307-2RS CAT.KST004
11	B01300739R	DISTANZIALE 35X42X41	SPACER	ENTRETOISE	DISTANZSTUECK 35X42X41	DISTANCIADOR 35X42X41
12	B01547230R	SPES. 45 62 2	SHIM	ENTRETOISE	SCHEIBE	ESPES. 45 62 2
13	B02500010R	BRONZINA 45 53 25	BUSHING	COUSSINET	BRONZEBUCHSE 45 53 25	COJINETE 45 53 25
14	B01700045R	ANEL. D ARR. ALB. 45-E UNI3653	SEEGER RING	BAGUE SEEGER	SEEGERRING 45-E	ANIL. DE PARAD. RB. 45-E UNI3
15	B01300003R	RALLA ATTACCO PU	WASHER ATTACK PICK-UP			RANGUA CONEXI N PU
16	B07S01654R	COCLEA SX PU 220	LEFT PICK-UP AUGER 220	VIS GAUCHE PU 220	LINKE PICK-UP ZUBRINGERSCHNECK	TORNILLO SIN FIN IZQ PU 220
17	B07S01653R	COCLEA DX PU 220	RIGHT PICK-UP AUGER 220	VIS DROIT PU 220	RECHTE PICK-UP ZUBRINGERSCHNEC	TORNILLO SIN FIN DER PU 220
18	F01020472R	VITE M10X1,5X25 U5739 8.8ZN	SCR. M10X1,5X25 U5739 8.8ZN	VIS M10X1,5X25 U5739 8.8 ZN	SCHRAUBE M10X1,5X25 U5739 8.8	TORNILLO M10X1,5X25 U5739 8.8
19	F01410062R	ROS.M10 10,5X 18X 2 U6592 ZN	WASHER M10 10,5X 18X 2 U6592	RONDELLE M10 10,5X18X2 ZN	DICHTUNGSRING M10 10,5X18X2 ZN	ARAND.M10 10,5X 18X 2 U6592 ZN
20	B07S01848R	LAMIERA CONVOGLIAMENTO PU L	WIDE PICK-UP BAFFLE PLATE	TOLE DE TRANSPORT PU L	WEITE PICK-UP NIEDERHALTERBLEC	CHAPA DE TRANSPORTE PU L
21	B0C003712R	BOCCOLA	BUSH	COQUILLE	BUCHSE	CASQUILLO
22	F02050101R	ANELLO E. DE 25X 1,2 U7435 C7	SEEGER RING E. 25X1,2 7435 C70	SEEGER E. 25X 1,2 U7435 C70	SEEGERING E. 25X 1,2 U7435 C70	ANILLO E. DE 25X 1,2 U7435 C7
23	B0C100017R	ATTACCO LAMIERA CONVOGLIAMENTO	CONVEYOR PLATE ATTACHMENT	ATTELAGE TOLE D ACHEMINEMENT	ZUFUEHRBLECHBEFESTIGUNG	CONEXI N CHAPA DE TRANSPORTE
24	B0C004002R	GANCIO	HOOK	CROCHET	HAKEN	GANCHO
25	F01020510R	VITE M12X1,75X30 U5739 8.8ZN	SCR. M12X1,75X30 U5739 8.8ZN	VIS M12X1,75X30 U5739 8.8ZN	SCHRAU.M12X1,75X30 U5739 8.8ZN	TORNILLO M12X1,75X30 U5739
26	F01230213R	DADO M12X1,75 U7474 CL8 ZN	NUT M12X1,75 U7474 6SZN	ECROU AUTOBL. M12	SELBSTSPERR.MUTTER M12	TUERCA M12X1,75 U7474 CL8 ZN
27	B00471230R	VITE TTEI M12X 30-8.8 UNBRA	SCREW	VIS	SCHRAUBE TTEI M12X 30-8.8	TORNILLO CAB.ALLEN CON HUECO
28	F01410076R	ROS.M12 13X 24X2,5 U6592 ZN	WASHER 12 13X 24X2,5 U6592 ZN	RONDEL. M12 13X24X2,5 U6592 ZN	SCHEIBE M12 13X24X2,5 U6592 ZN	ARAND.M12 13X 24X2,5 U6592 ZN
29	F01230213R	DADO M12X1,75 U7474 CL8 ZN	NUT M12X1,75 U7474 6SZN	ECROU AUTOBL. M12	SELBSTSPERR.MUTTER M12	TUERCA M12X1,75 U7474 CL8 ZN
30	B01000021R	SPINOTTO PER MOTOZAPPA 10X45	PIN	EPINE	STIFT	ESP RRAGO PARA MOTOCULTIVAD
31	B0C005187R	ATTACCO TAMPONE	PLUG ATTACHMENT	ATTELAGE TAMPON	PROPFENBEFESTIGUNG	CONEXI N DEL TAP N
32	F01020476R	VITE M10X1,5X30 U5739 8.8ZN	SCR. M10X1,5X30 U5739 8.8ZN	VIS M10X1,5X30 U5739 8.8 ZN	SCHRAUBE M10X1,5X30U5739 8.8ZN	TORNILLO M10X1,5X30 U5739 8.8
33	F01410062R	ROS.M10 10,5X 18X 2 U6592 ZN	WASHER M10 10,5X 18X 2 U6592	RONDELLE M10 10,5X18X2 ZN	DICHTUNGSRING M10 10,5X18X2 ZN	ARAND.M10 10,5X 18X 2 U6592 ZN
34	F01230202R	DADO M10X 1,5 D985 8 ZN	NUT M10 D985	ECROU AUTOBL. M10	SELBSTSPERR.MUTTER M10	TUERCA M10X 1,5 D985 8
35	B07049749R	TAMPONE 50X21 M10	BUMPER 50X21 M10	TAMPON 50X21 M10	PUFFER 50X21 M10	TAP N 50X21 M10
36	F01200270R	DADO M10X1,5 U5588 CL8 ZN	NUT M10X1,5 U5588 6.8ZN	ECROU M10X 1,5 U5588 6.8 ZN	MUTTER M10X 1,5 U5588 6.8 ZN	TUERCA M10X1,5 U5588 CL8 ZN
37	F01230202R	DADO M10X 1,5 D985 8 ZN	NUT M10 D985	ECROU AUTOBL. M10	SELBSTSPERR.MUTTER M10	TUERCA M10X 1,5 D985 8
38	B07V00081R	PROT. COCLEA PU 200	AUGER GUARD	PROTECTION PELLETEUSE PU 200	SCHNECKENSCHUTZ	PROT. TORNILLO SIN FIN PU 200
39	B0C003730R	FISSAGGIO GOMMA	FIXING PLATE	FIXAGE CAOUTCHOUC	GUMMIFIXIERPLATTE	FIJACI N DE GOMA
40	B01000013R	RIVETTO STR. 6X18 U9200A AL	RIVET	RIVET	ABREISSNIETEN 6X18	REMACHE EXTR. 6X18 U9200A A
41	B0C003729R	SOSTEGNO GOMMA	RUBBER SUPPORT	SUPPORT CAOUTCHOUC	GUMMIHALTER	SOPORTE DE GOMA
42	B01000012R	RIVETTO STR. 6,4X22 ACCIAIO	RIVET	RIVET	ABREISSNIETEN 6X26	REMACHE EXTR. 6,4X22 ACERO
43	F01020472R	VITE M10X1,5X25 U5739 8.8ZN	SCR. M10X1,5X25 U5739 8.8ZN	VIS M10X1,5X25 U5739 8.8 ZN	SCHRAUBE M10X1,5X25 U5739 8.8	TORNILLO M10X1,5X25 U5739 8.8
44	F01410062R	ROS.M10 10,5X 18X 2 U6592 ZN	WASHER M10 10,5X 18X 2 U6592	RONDELLE M10 10,5X18X2 ZN	DICHTUNGSRING M10 10,5X18X2 ZN	ARAND.M10 10,5X 18X 2 U6592 ZN
45	F01230202R	DADO M10X 1,5 D985 8 ZN	NUT M10 D985	ECROU AUTOBL. M10	SELBSTSPERR.MUTTER M10	TUERCA M10X 1,5 D985 8
46	B01527654R	RALLA 45 62 4	FIFTH WHEEL	BUTEE	SCHEIBE	RANGUA 45 62 4

TAV_150

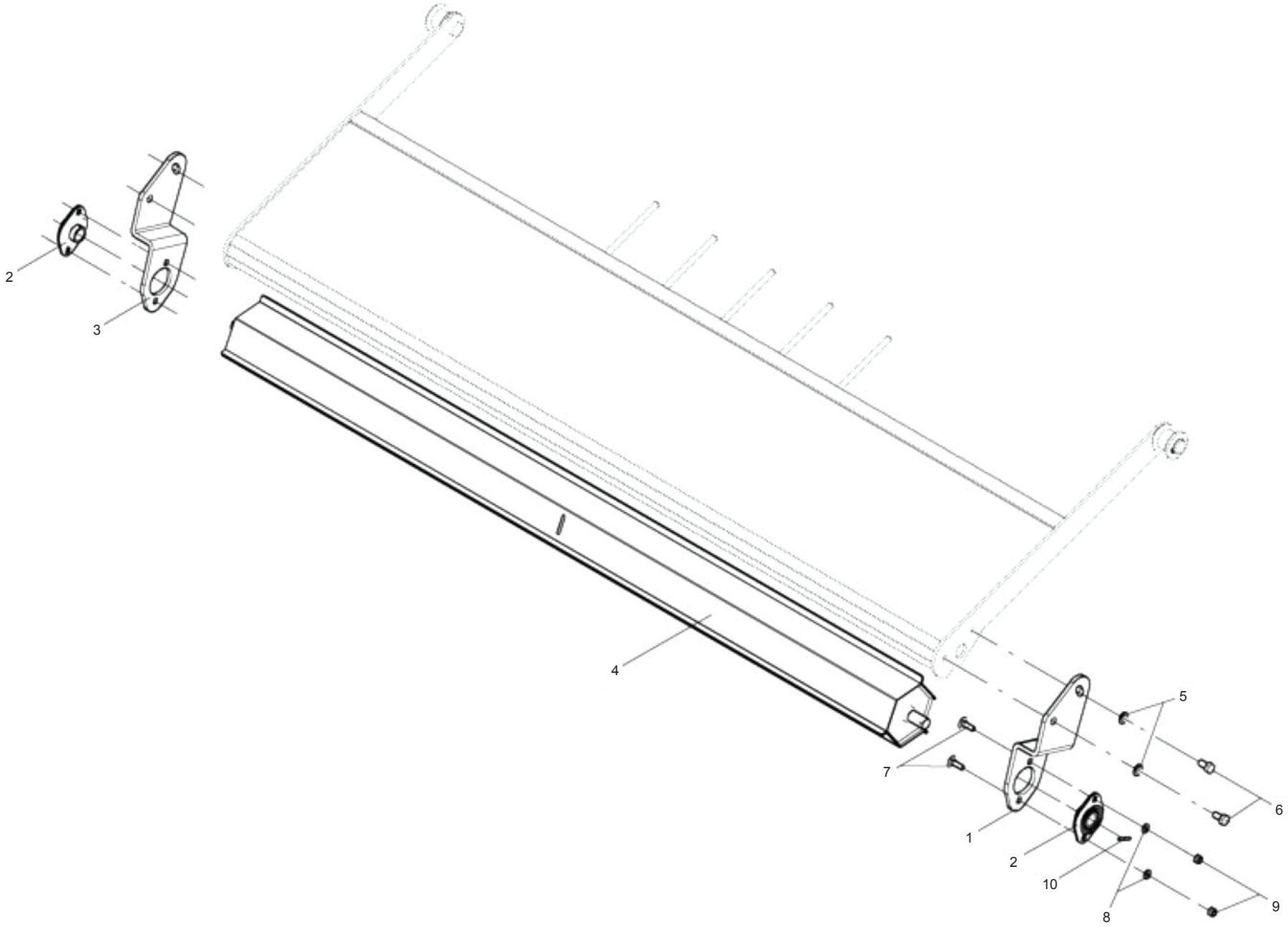

MASCHIO

cod. F07022338

RULLO CONVOGLIATORE CUT (PICK-UP M)
ROLLER CONVEYOR CUT (PICK-UP M)

TAV_150

Pos.	Cod.	Descrizione	Description	Description	Benennung	Descripcion
1	B0C4P0187R	ATTACCO SX	ATTACCO SX .			ENGANCHE IZQ
2	B02341020R	SUPP.FLANG.OV 20 LAM NBR-NSK	SUPPORT	SUPPORT	GEFLANSCHTES LAGER	SOP.BRIDA.OV 20 CHAP. NBR-NSK
3	B0C4P0188R	ATTACCO DX	ATTACCO DX .			ENGANCHE DER
4	B07SP0341R	RULLO CONVOGLIATORE M	CONVEYOR ROLLER M			RODILLO TRANSPORTADOR M
5	B01411020R	RONDELLA PIANA LARGA 10X30	WIDE FLAT WASHER 10X30			ARANDELA PLANA ANCHA 10X30
6	F01020470R	VITE M10X1,5X20 U5739 8.8ZN	SCR. M10X1,5X20 U5739 8.8ZN	VIS M10X1,5X20 U5739 8.8 ZN	SCHRAUBE M10X1,5X20 U5739 ZN	TORNILLO M10X1,5X20 U5739 8
7	F01060202R	VITE M8X1,25X25 U5731 4.6ZN	SCR. M8X1,25X25 U5731 4.6ZN	VIS M8X1,25X25 U5731 4.6	DUEBEL M8X1,25X25 U5731 4.6 ZN	TORNILLO M8X1,25X25 U5731 4.6
8	F01410051R	ROS.M8 8,4X 17X1,6 U6592 ZN	WASHER M8 8,4X17X1,6 U6592 ZN	RONDELLE M8 8,4X17X1,6 ZN	SCHEIBE M8 8,4X17X1,6 U6592 ZN	ARAND.M8 8,4X 17X1,6 U6592 ZN
9	B00920208R	DADO AUTOB.BASSO M 8-5S D985	NUT M8X1 D985 8ZN	ECROU	SELBSTSICHERNDE MUTTER M8-5S	TUERCA M8X1 D985 8
10	F02100065R	SPINA E.P. 4X 30 U6873 C70 BR	PIN EL. 4X30 DIN 1481	GOUPILLE EL.4 X30 DIN 1481	SPANNSTIFT 4X30 DIN 1481	CLAVIJA EL.P. 4X 30 U6873 C70

TAV_155

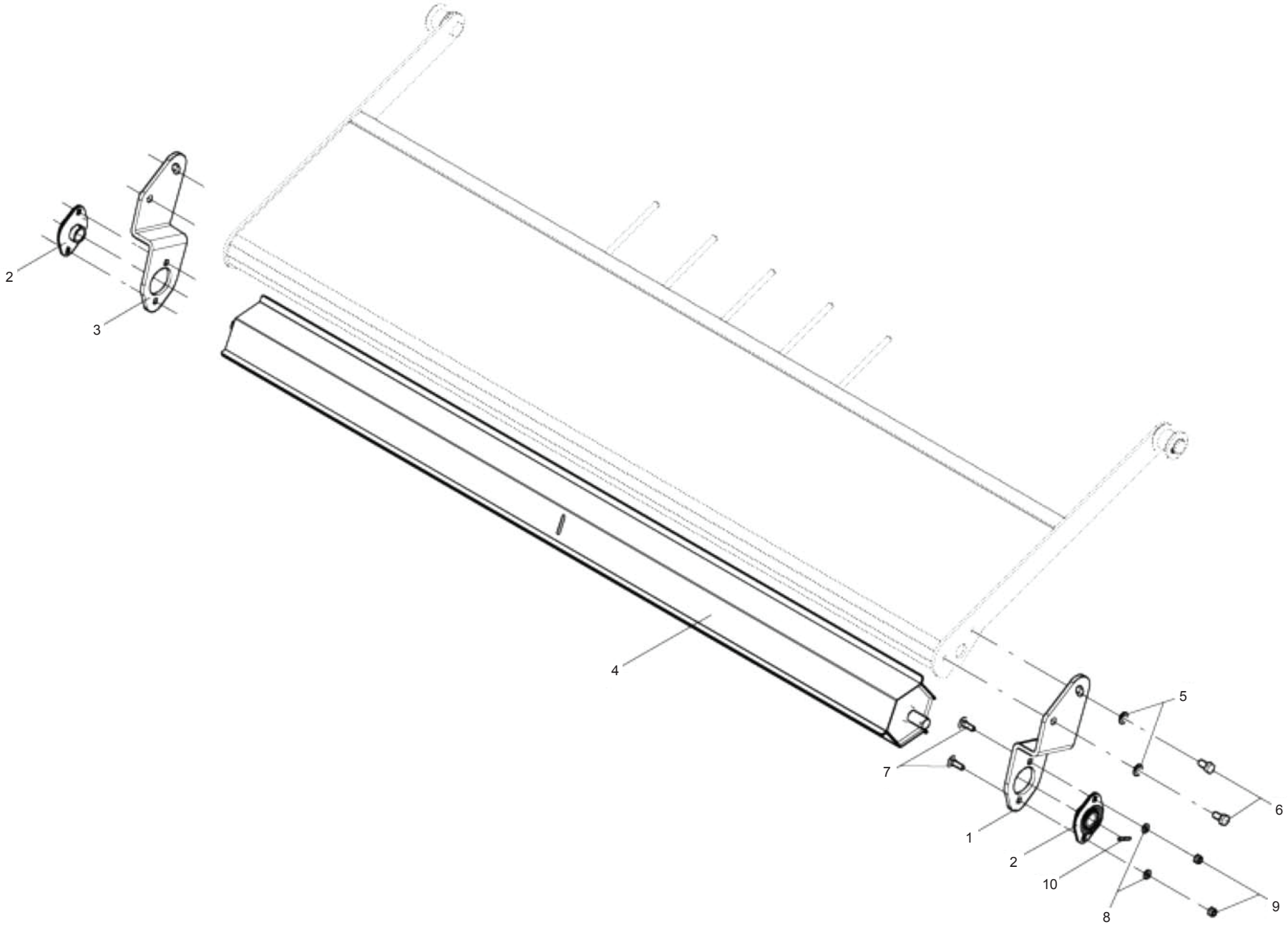

RULLO CONVOGLIATORE CUT (PICK-UP L)
ROLLER CONVEYOR CUT (PICK-UP L)

TAV_155

Pos.	Cod.	Descrizione	Description	Description	Benennung	Descripcion
1	B0C4P0187R	ATTACCO SX	ATTACCO SX .			ENGANCHE IZQ
2	B02341020R	SUPP.FLANG.OV 20 LAM NBR-NSK	SUPPORT	SUPPORT	GEFLANSCHTES LAGER	SOP.BRIDA.OV 20 CHAP. NBR-NSK
3	B0C4P0188R	ATTACCO DX	ATTACCO DX .			ENGANCHE DER
4	B07SP0342R	RULLO CONVOG. L	RULLO CONVOG. L .			RODILLO TRANSP. L
5	B01411020R	RONDELLA PIANA LARGA 10X30	WIDE FLAT WASHER 10X30			ARANDELA PLANA ANCHA 10X30
6	F01020470R	VITE M10X1,5X20 U5739 8.8ZN	SCR. M10X1,5X20 U5739 8.8ZN	VIS M10X1,5X20 U5739 8.8 ZN	SCHRAUBE M10X1,5X20 U5739 ZN	TORNILLO M10X1,5X20 U5739 8
7	F01060202R	VITE M8X1,25X25 U5731 4.6ZN	SCR. M8X1,25X25 U5731 4.6ZN	VIS M8X1,25X25 U5731 4.6	DUEBEL M8X1,25X25 U5731 4.6 ZN	TORNILLO M8X1,25X25 U5731 4.6
8	F01410051R	ROS.M8 8,4X 17X1,6 U6592 ZN	WASHER M8 8,4X17X1,6 U6592 ZN	RONDELLE M8 8,4X17X1,6 ZN	SCHEIBE M8 8,4X17X1,6 U6592 ZN	ARAND.M8 8,4X 17X1,6 U6592 ZN
9	B00920208R	DADO AUTOB.BASSO M 8-5S D985	NUT M8X1 D985 8ZN	ECROU	SELBSTSICHERNDE MUTTER M8-5S	TUERCA M8X1 D985 8
10	F02100065R	SPINA E.P. 4X 30 U6873 C70 BR	PIN EL. 4X30 DIN 1481	GOUPILLE EL.4 X30 DIN 1481	SPANNSTIFT 4X30 DIN 1481	CLAVIJA EL.P. 4X 30 U6873 C70

TAV_160

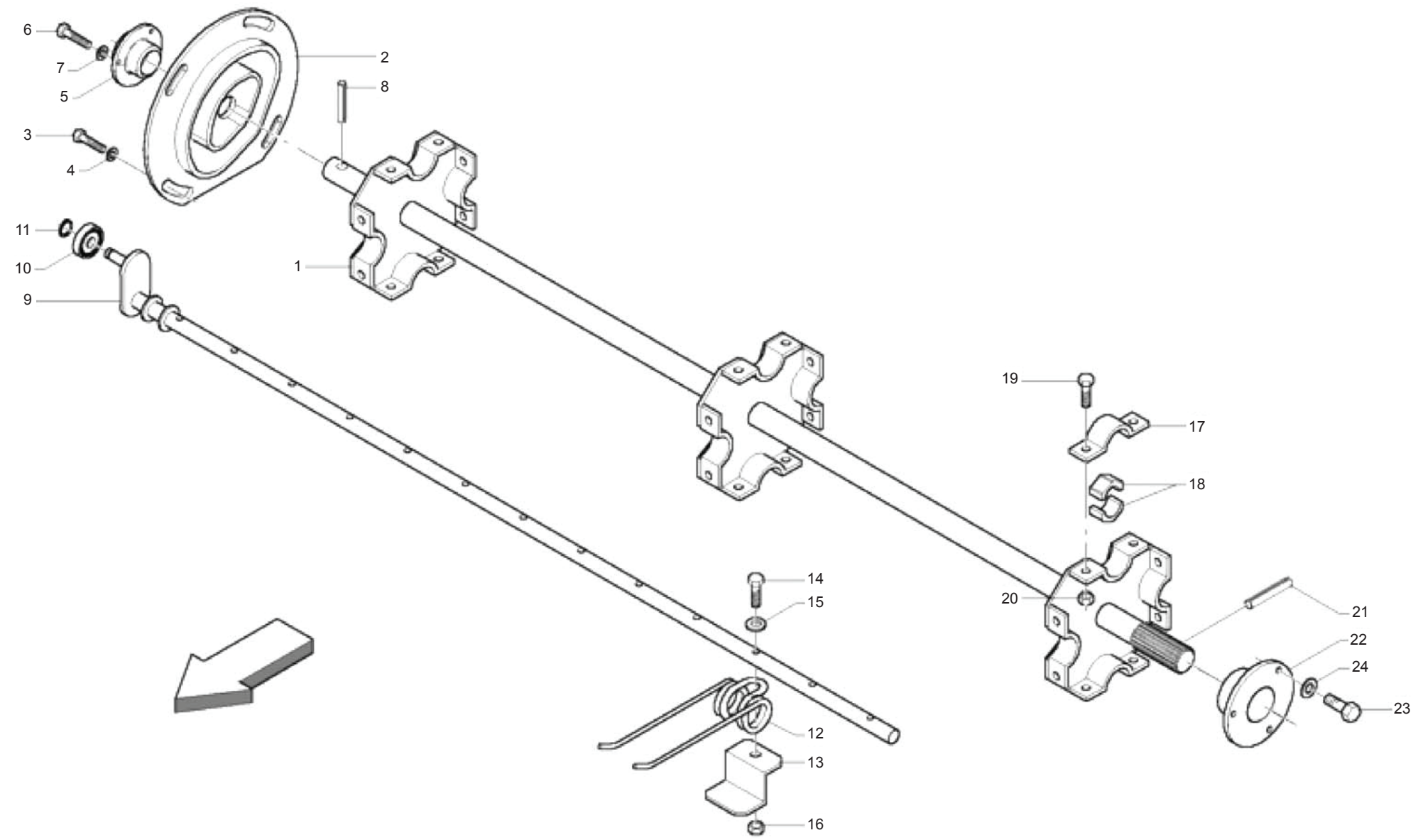

ASPO PICK-UP M
PICK-UP M SHAFT

TAV_160

Pos.	Cod.	Descrizione	Description	Description	Benennung	Descripcion
1	B07S00993R	CORPO ASPO 200	PICK-UP SHAFT CASING	CORPS ENROULEUSE 180	PICK-UP ANTRIEBSWELLENGEHAEUSE	CUERPO DEL MOLINETE 200
2	B057P0203R	CAMMA PICK-UP	PICK-UP CAM			LEVA PICK-UP
3	F01020510R	VITE M12X1,75X30 U5739 8.8ZN	SCR. M12X1,75X30 U5739 8.8ZN	VIS M12X1,75X30 U5739 8.8ZN	SCHRAU.M12X1,75X30 U5739 8.8ZN	TORNILLO M12X1,75X30 U5739
4	B01523831R	RALLA 12 33 5	FIFTH WHEEL	BUTEE	UMBORDELUNG 12 33 5	RANGUA 12 33 5
5	B02353030R	SUPP.FLANG.TONDO 30 LAM.	BEARING FLANGED SUPPORT 30	SUPPORT FLANGE ROND 30 LAM.	FLANSCHLAGER	SOP.BRIDA REDONDO 30 CHAP.
6	F01020470R	VITE M10X1,5X20 U5739 8.8ZN	SCR. M10X1,5X20 U5739 8.8ZN	VIS M10X1,5X20 U5739 8.8 ZN	SCHRAUBE M10X1,5X20 U5739 ZN	TORNILLO M10X1,5X20 U5739 8
7	F01410062R	ROS.M10 10,5X 18X 2 U6592 ZN	WASHER M10 10,5X 18X 2 U6592	RONDELLE M10 10,5X18X2 ZN	DICHTUNGSRING M10 10,5X18X2 ZN	ARAND.M10 10,5X 18X 2 U6592 ZN
8	F02100122R	SPINA E.P. 6X 45 U6873 C70 BR	PIN EL. 6 X45 DIN 1481	FICHE EL. 6 X45 DIN 1481	SPANNSTIFT 6 X45 DIN 1481	CLAVIJA EL.P. 6X 45 U6873 C70
9	B07S00991R	BARRA PORTADENTI PICK UP 200	TINE HOLDER BAR	BARRE PORTE-DENTS 180	ZINKENTRAGERSTANGE	BARRA PORTADIENTES PICK UP 20
10	B020R1210R	ROTELLA SKF 361201 R	ROLLER SKF 361201 R PU BINDER	GALET SKF 361201 R PICK UP LEG	LAGER SKF 361201 R	ARANDELA SKF 361201 R
11	B01700012R	ANEL. D ARR. ALB. 12-E UNI3653	SEEGER RING	BAGUE SEEGER	SEEGERRING 12-E	ANIL. DE PARAD. RB. 12-E UNI3
12	B018P0003R	DENTE RACCOGLITORE PICK-UP	TOOTH COLLECTING PU	DENT PICK-UP	PICK-UP ZINKEN	DIENTE RECOGEDOR PICK-UP
13	B0C000214R	PIASTRA SOSTEGNO MOLLA	SPRING SUPPORTING PLATE	PLAQUE SUPPORT RESSORT	FEDER STUETZPLATTE	PLACA DE SOPORTE DEL MUELLE
14	F01020074R	VITE M8X1,25X50 U5737 10.9ZD	SCR. M8X1,25X50 U5737 10.9ZD	VIS M 8X50	SCHRAUBE M 8X50	TORNILLO M8X1,25X50 U5737 10
15	F01420048R	ROS.M8 8,4X 24X 2 U6593 ZN	WASHER M8 8,4X 24X2 U6593 ZN	RONDELLE M8 8,4X24X 2 U6593 ZN	SCHEIBEN M8 8,4X24X 2 U6593 ZN	ARAND.M8 8,4X 24X 2 U6593 ZN
16	F01230034R	DADO M8X1,25 D982 8ZN	NUT M8X1,25 D982 8ZN	ECROU M8X 1,25 ZN	MUTTER M8X 1,25 D982 8 ZN	TUERCA M8X1,25 D982 8
17	B0C001521R	CAVALLOTTO	U BOLT	BOULON	BUEGELBOLZEN	PUENTE
18	B025P0010R	SEMIBUSSOLA PER ASPO PICK-UP	HALF-BUSHFOR ASPO PICK-UP	SEMI-PALIER SPECIAL	HALBLAGERBUCHSE	SEMICASQUILLO PARA MOLINETE
19	F01020472R	VITE M10X1,5X25 U5739 8.8ZN	SCR. M10X1,5X25 U5739 8.8ZN	VIS M10X1,5X25 U5739 8.8 ZN	SCHRAUBE M10X1,5X25 U5739 8.8	TORNILLO M10X1,5X25 U5739 8.8
20	F01220033R	DADO M10X1,5 D980 8ZN	NUT M10X1,5 D980 8ZN	ECROU M10X1,5 D980 8ZN	MUTTER M10X1,5 D980 8ZN	TUERCA M10X1,5 D980 8
21	F02100122R	SPINA E.P. 6X 45 U6873 C70 BR	PIN EL. 6 X45 DIN 1481	FICHE EL. 6 X45 DIN 1481	SPANNSTIFT 6 X45 DIN 1481	CLAVIJA EL.P. 6X 45 U6873 C70
22	B02353030R	SUPP.FLANG.TONDO 30 LAM.	BEARING FLANGED SUPPORT 30	SUPPORT FLANGE ROND 30 LAM.	FLANSCHLAGER	SOP.BRIDA REDONDO 30 CHAP.
23	F01020470R	VITE M10X1,5X20 U5739 8.8ZN	SCR. M10X1,5X20 U5739 8.8ZN	VIS M10X1,5X20 U5739 8.8 ZN	SCHRAUBE M10X1,5X20 U5739 ZN	TORNILLO M10X1,5X20 U5739 8
24	F01410062R	ROS.M10 10,5X 18X 2 U6592 ZN	WASHER M10 10,5X 18X 2 U6592	RONDELLE M10 10,5X18X2 ZN	DICHTUNGSRING M10 10,5X18X2 ZN	ARAND.M10 10,5X 18X 2 U6592 ZN

TAV_165

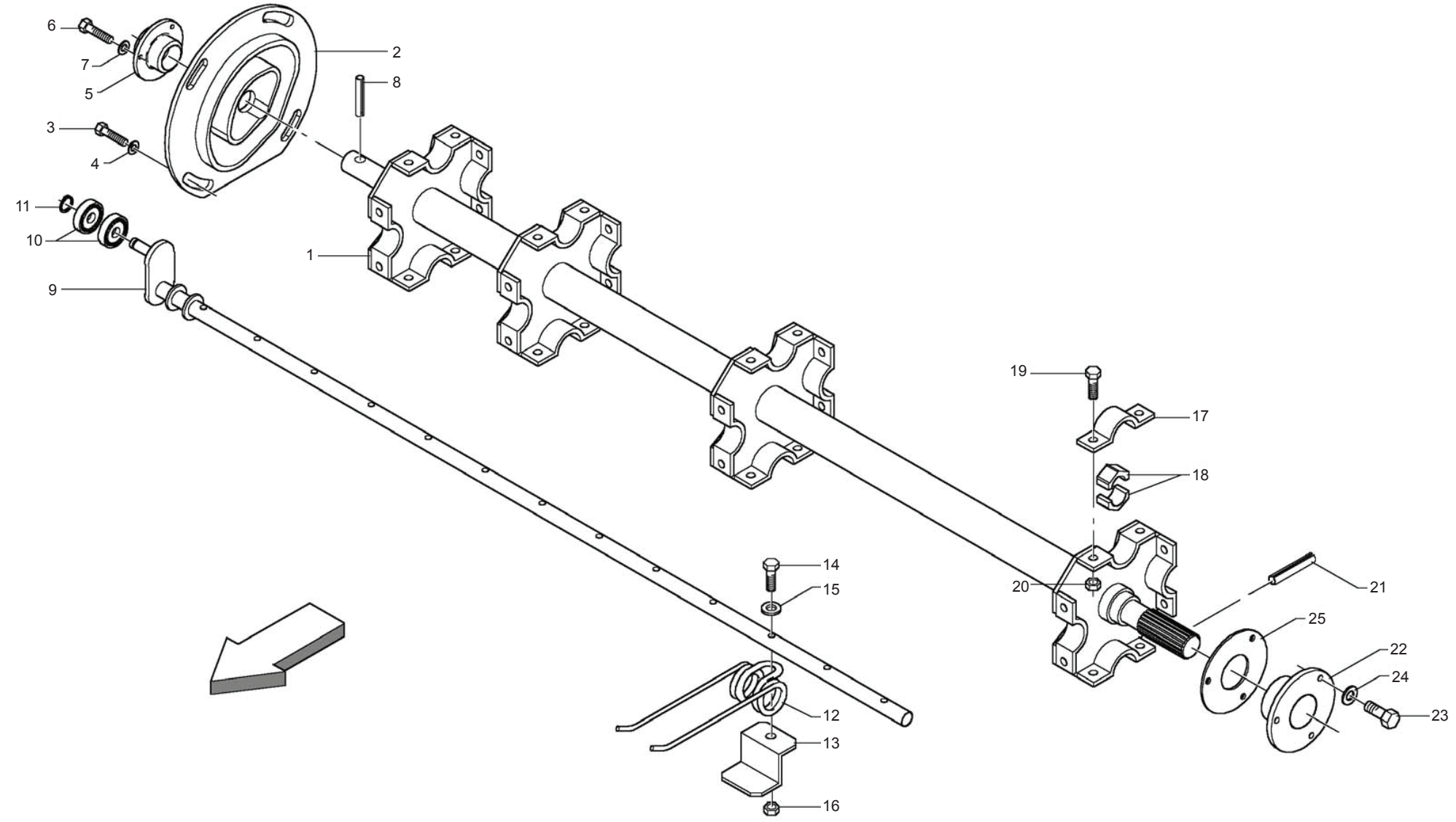

ASPO PICK-UP L
PICK-UP L SHAFT

TAV_165

Pos.	Cod.	Descrizione	Description	Description	Benennung	Descripcion
1	B07S01223R	CORPO ASPO 220	PICK-UP SHAFT CASING 220	CORPS ENROULEUR 220	PICK-UP ANTRIEBSWELLENGEHAEUSE	CUERPO DEL MOLINETE 220
2	B057P0203R	CAMMA PICK-UP	PICK-UP CAM			LEVA PICK-UP
3	F01020510R	VITE M12X1,75X30 U5739 8.8ZN	SCR. M12X1,75X30 U5739 8.8ZN	VIS M12X1,75X30 U5739 8.8ZN	SCHRAU.M12X1,75X30 U5739 8.8ZN	TORNILLO M12X1,75X30 U5739
4	B01523831R	RALLA 12 33 5	FIFTH WHEEL	BUTEE	UMBORDELUNG 12 33 5	RANGUA 12 33 5
5	B02353030R	SUPP.FLANG.TONDO 30 LAM.	BEARING FLANGED SUPPORT 30	SUPPORT FLANGE ROND 30 LAM.	FLANSCHLAGER	SOP.BRIDA REDONDO 30 CHAP.
6	F01020470R	VITE M10X1,5X20 U5739 8.8ZN	SCR. M10X1,5X20 U5739 8.8ZN	VIS M10X1,5X20 U5739 8.8 ZN	SCHRAUBE M10X1,5X20 U5739 ZN	TORNILLO M10X1,5X20 U5739 8
7	F01410062R	ROS.M10 10,5X 18X 2 U6592 ZN	WASHER M10 10,5X 18X 2 U6592	RONDELLE M10 10,5X18X2 ZN	DICHTUNGSRING M10 10,5X18X2 ZN	ARAND.M10 10,5X 18X 2 U6592 ZN
8	F02100123R	SPINA E.P. 6X 45 U6873 C70 ZN	ELASTIC PIN 6X45	GOUJON ELSTIQUE 6X45	SPANNHUELSE 6X45	CLAVIJA EL.P. 6X 45 U6873 C70
9	B07SP1050R	BARRA P.DENTI PU 220 TEMPRATA	PICK-UP BAR HARDENED 200	BARRE PO.-DENTS PU 220 TEMP.		BARRA P.DIENTES PU 220 TEMPLA
10	B020R1210R	ROTELLA SKF 361201 R	ROLLER SKF 361201 R PU BINDER	GALET SKF 361201 R PICK UP LEG	LAGER SKF 361201 R	ARANDELA SKF 361201 R
11	B01700012R	ANEL. D ARR. ALB. 12-E UNI3653	SEEGER RING	BAGUE SEEGER	SEEGERRING 12-E	ANIL. DE PARAD. RB. 12-E UNI3
12	B018P0003R	DENTE RACCOGLITORE PICK-UP	TOOTH COLLECTING PU	DENT PICK-UP	PICK-UP ZINKEN	DIENTE RECOGEDOR PICK-UP
13	B0C000214R	PIASTRA SOSTEGNO MOLLA	SPRING SUPPORTING PLATE	PLAQUE SUPPORT RESSORT	FEDER STUETZPLATTE	PLACA DE SOPORTE DEL MUELLE
14	F01020074R	VITE M8X1,25X50 U5737 10.9ZD	SCR. M8X1,25X50 U5737 10.9ZD	VIS M 8X50	SCHRAUBE M 8X50	TORNILLO M8X1,25X50 U5737 10
15	F01420048R	ROS.M8 8,4X 24X 2 U6593 ZN	WASHER M8 8,4X 24X2 U6593 ZN	RONDELLE M8 8,4X24X 2 U6593 ZN	SCHEIBEN M8 8,4X24X 2 U6593 ZN	ARAND.M8 8,4X 24X 2 U6593 ZN
16	F01230293R	DADO M8X1,25 U7473 8ZN	NUT M8X1,25 U7473 8ZN			TUERCA M8X1,25 U7473 8
17	B0C001521R	CAVALLOTTO	U BOLT	BOULON	BUEGELBOLZEN	PUENTE
18	B025P0010R	SEMIBUSSOLA PER ASPO PICK-UP	HALF-BUSHFOR ASPO PICK-UP	SEMI-PALIER SPECIAL	HALBLAGERBUCHSE	SEMICASQUILLO PARA MOLINETE
19	F01020472R	VITE M10X1,5X25 U5739 8.8ZN	SCR. M10X1,5X25 U5739 8.8ZN	VIS M10X1,5X25 U5739 8.8 ZN	SCHRAUBE M10X1,5X25 U5739 8.8	TORNILLO M10X1,5X25 U5739 8.8
20	F01220033R	DADO M10X1,5 D980 8ZN	NUT M10X1,5 D980 8ZN	ECROU M10X1,5 D980 8ZN	MUTTER M10X1,5 D980 8ZN	TUERCA M10X1,5 D980 8
21	F02100124R	SPINA E.P. 6X 50 U6873 C70 BR	PIN EL. 6X50 U6873 C70 BR	GOUJON 6X50 U6873 C70 BR	STIFT 6X50 U6873 C70 BR	CLAVIJA EL.P. 6X 50 U6873 C70
22	B02353035R	SUPP.FLANG.TONDO 35 LAMIERA	BEARING FLANGED SUPPORT D.35	SUPPORT FLANGE ROND 35 LAMES	FLANSCHLAGER	SOPORTE BRIDA REDONDO 35 CHA
23	F01020470R	VITE M10X1,5X20 U5739 8.8ZN	SCR. M10X1,5X20 U5739 8.8ZN	VIS M10X1,5X20 U5739 8.8 ZN	SCHRAUBE M10X1,5X20 U5739 ZN	TORNILLO M10X1,5X20 U5739 8
24	F01410062R	ROS.M10 10,5X 18X 2 U6592 ZN	WASHER M10 10,5X 18X 2 U6592	RONDELLE M10 10,5X18X2 ZN	DICHTUNGSRING M10 10,5X18X2 ZN	ARAND.M10 10,5X 18X 2 U6592 ZN
25	B01301126R	SPES.	SHIM	ENTRETOISE	DICHTUNG	ESPES.

TAV_170

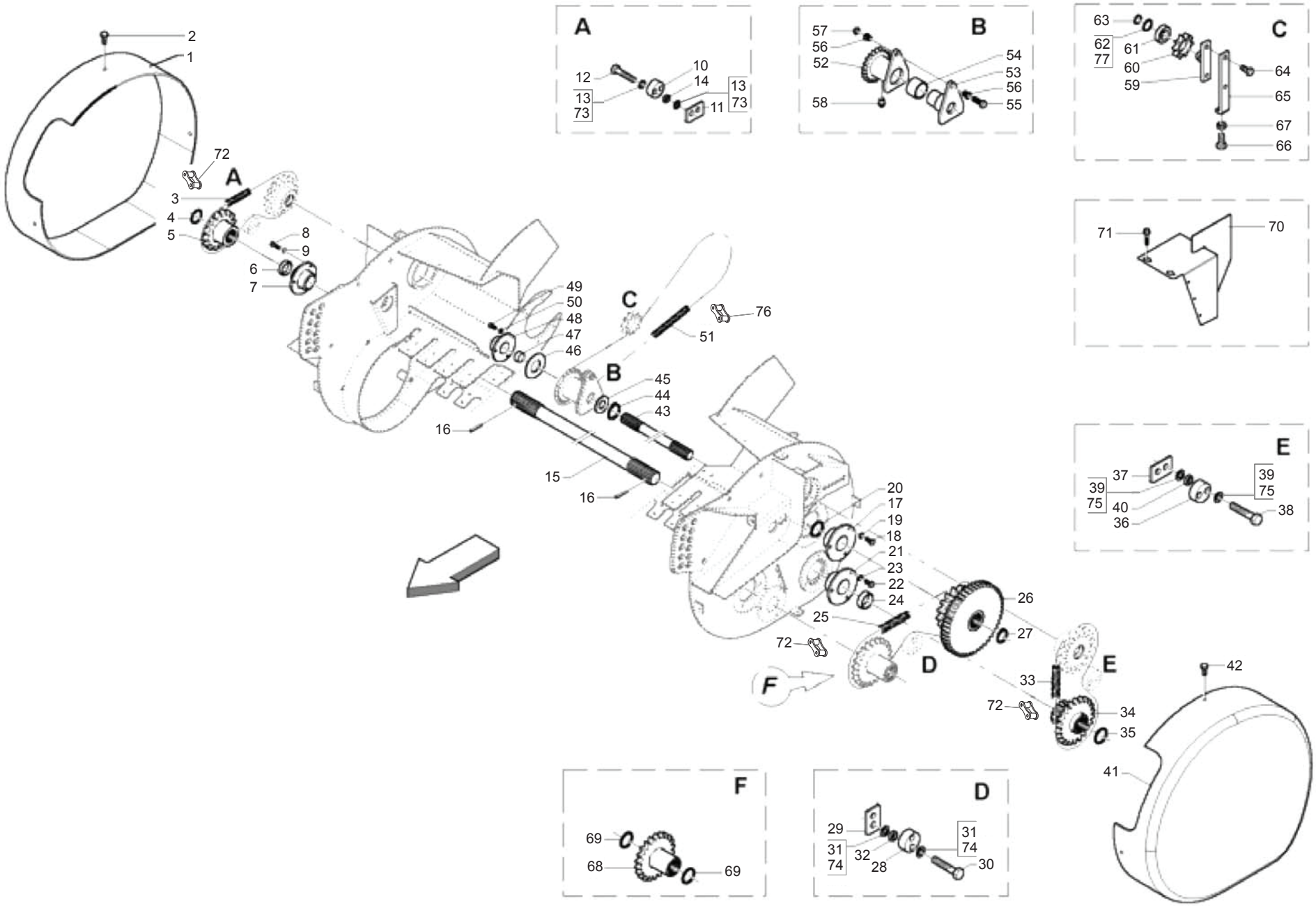

MASCHIO

cod. F07022338

TRASMISSIONE PICK-UP M
PICK-UP M TRANSMISSION

TAV_170

Pos.	Cod.	Descrizione	Description	Description	Benennung	Descripcion
1	B07SP0001R	CARTER DX PU	PU RIGHT GUARD	CARTER DROIT PU	CARTER RECHTS PU	C RTER DER PU
2	F01020436R	VITE M8X1,25X20 U5739 8.8ZN	SCR. M8X1,25X20 U5739 8.8ZN	VIS M8X1,25X 20 U5739 8.8 ZN	SCHRAUBE M8X1,25X20U5739 8.8ZN	TORNILLO M8X1,25X20 U5739 8.8
3	B03111057R	CATENA RULLI ASA 60-1 57 MGL	ROLLER CHAIN	CHAINE ROULEAUX	KETTE ASA 60-1 57MGL ISO1	CADENA DE LOS RODILLOS ASA 60-
4	B01534416R	SPES. 35 43 1 ZINCATO	SHIM	ENTRETOISE	AUSGLEICHSCHEIBE 35X43X1	ESPES. 35 43 1 CINCADO
5	B03400003R	INGR. Z=22; 3 4; ISO 12B-1	GEAR Z=22-3 4	ENGRANAGE	KETTENRAD Z=22-3 4	ENGR. Z=22; 3 4; ISO 12B-1 PU
6	B01330957R	DISTANZIALE 35-48-7	SPACER	ENTRETOISE	DISTANZSTUECK 35X48X7	DISTANCIADOR 35-48-7
7	B02353035R	SUPP.FLANG.TONDO 35 LAMIERA	BEARING FLANGED SUPPORT D.35	SUPPORT FLANGE ROND 35 LAMES	FLANSCHLAGER	SOPORTE BRIDA REDONDO 35 CHA
8	F01020472R	VITE M10X1,5X25 U5739 8.8ZN	SCR. M10X1,5X25 U5739 8.8ZN	VIS M10X1,5X25 U5739 8.8 ZN	SCHRAUBE M10X1,5X25 U5739 8.8	TORNILLO M10X1,5X25 U5739 8.8
9	F01410062R	ROS.M10 10,5X 18X 2 U6592 ZN	WASHER M10 10,5X 18X 2 U6592	RONDELLE M10 10,5X18X2 ZN	DICHTUNGSRING M10 10,5X18X2 ZN	ARAND.M10 10,5X 18X 2 U6592 ZN
10	B07VP0513R	TENDICATENA IN NYLON	NYLON CHAIN TIGHTENER	TENDEUR DE CHAINE EN NYLON		TENSOR DE CADENA DE NAILON
11	B0C003172R	ATTACCO TENDICATENA	CHAIN TIGHTENER COUPLING	ATTELAGE TENDEUR DE CHAINE	KETTENSPANNER BEFESTIGUNG	CONEXI N TENSOR DE CADENA
12	F01020164R	VITE M12X1,75X70 U5737 8.8ZN	SCREW M12X1,75X70 U5737 8.8ZN	VIS M12X1,75X70 ZN	SCHR. M12X1,75X70 U5737 8.8 ZN	TORNILLO M12X1,75X70 U5737 8.
13	F01410076R	ROS.M12 13X 24X2,5 U6592 ZN	WASHER 12 13X 24X2,5 U6592 ZN	RONDEL. M12 13X24X2,5 U6592 ZN	SCHEIBE M12 13X24X2,5 U6592 ZN	ARAND.M12 13X 24X2,5 U6592 ZN
14	B01523831R	RALLA 12 33 5	FIFTH WHEEL	BUTEE	UMBORDELUNG 12 33 5	RANGUA 12 33 5
15	B03A34361R	CONTRALBERO LUNGO PU 200	COUNTERSHAFT	CONTRE ARBRE	VORGELEGEWELLE 200	CONTRA- RBOL LARGO PU 200
16	F02100124R	SPINA E.P. 6X 50 U6873 C70 BR	PIN EL. 6X50 U6873 C70 BR	GOUJON 6X50 U6873 C70 BR	STIFT 6X50 U6873 C70 BR	CLAVIJA EL.P. 6X 50 U6873 C70
17	B02353035R	SUPP.FLANG.TONDO 35 LAMIERA	BEARING FLANGED SUPPORT D.35	SUPPORT FLANGE ROND 35 LAMES	FLANSCHLAGER	SOPORTE BRIDA REDONDO 35 CHA
18	F01020470R	VITE M10X1,5X20 U5739 8.8ZN	SCR. M10X1,5X20 U5739 8.8ZN	VIS M10X1,5X20 U5739 8.8 ZN	SCHRAUBE M10X1,5X20 U5739 ZN	TORNILLO M10X1,5X20 U5739 8
19	F01410062R	ROS.M10 10,5X 18X 2 U6592 ZN	WASHER M10 10,5X 18X 2 U6592	RONDELLE M10 10,5X18X2 ZN	DICHTUNGSRING M10 10,5X18X2 ZN	ARAND.M10 10,5X 18X 2 U6592 ZN
20	B01534416R	SPES. 35 43 1 ZINCATO	SHIM	ENTRETOISE	AUSGLEICHSCHEIBE 35X43X1	ESPES. 35 43 1 CINCADO
21	B02353035R	SUPP.FLANG.TONDO 35 LAMIERA	BEARING FLANGED SUPPORT D.35	SUPPORT FLANGE ROND 35 LAMES	FLANSCHLAGER	SOPORTE BRIDA REDONDO 35 CHA
22	F01020472R	VITE M10X1,5X25 U5739 8.8ZN	SCR. M10X1,5X25 U5739 8.8ZN	VIS M10X1,5X25 U5739 8.8 ZN	SCHRAUBE M10X1,5X25 U5739 8.8	TORNILLO M10X1,5X25 U5739 8.8
23	F01410062R	ROS.M10 10,5X 18X 2 U6592 ZN	WASHER M10 10,5X 18X 2 U6592	RONDELLE M10 10,5X18X2 ZN	DICHTUNGSRING M10 10,5X18X2 ZN	ARAND.M10 10,5X 18X 2 U6592 ZN
24	B01330957R	DISTANZIALE 35-48-7	SPACER	ENTRETOISE	DISTANZSTUECK 35X48X7	DISTANCIADOR 35-48-7
25	B03111046R	CATENA RULLI ASA 60-1 46 MGL	ROLLER CHAIN ASA60-1 46 MGL	CHAINE ROULEAUX	KETTE DER WALZEN	CADENA DE LOS RODILLOS ASA 60-
26	B03L34402R	INGR. DOPPIO Z=17 48 CON MOZZO	GEAR	ENGRANAGE	ZAHNRADPAAR Z=17 48	ENGR. DOBLE Z=17 48 CON BUJE
27	B01700035R	ANEL. D ARR. ALB. 35-E UNI3653	SEEGER RING	BAGUE SEEGER	SEEGERRING 35-E	ANIL. DE PARAD. RB. 35-E UNI3
28	B07VP0513R	TENDICATENA IN NYLON	NYLON CHAIN TIGHTENER	TENDEUR DE CHAINE EN NYLON		TENSOR DE CADENA DE NAILON
29	B0C003172R	ATTACCO TENDICATENA	CHAIN TIGHTENER COUPLING	ATTELAGE TENDEUR DE CHAINE	KETTENSPANNER BEFESTIGUNG	CONEXI N TENSOR DE CADENA
30	F01020160R	VITE M12X1,75X60 U5737 8.8ZN	SCR. M12X1,75X60 U5737 8.8ZN	VIS M12X1,75X60 U5737 8.8 ZN	SCHRA.M12X1,75X60 U5737 8.8 ZN	TORNILLO M12X1,75X60 U5737 8.
31	F01420120R	ROS.M12 13X36X2,5 U6593 ZN	WASHER M12 13X36X2,5 U6593 ZN	RONDELLE M12 13X36X2,5 ZN		ARAND.M12 13X36X2,5 U6593 ZN
32	B01523831R	RALLA 12 33 5	FIFTH WHEEL	BUTEE	UMBORDELUNG 12 33 5	RANGUA 12 33 5
33	B03111057R	CATENA RULLI ASA 60-1 57 MGL	ROLLER CHAIN	CHAINE ROULEAUX	KETTE ASA 60-1 57MGL ISO1	CADENA DE LOS RODILLOS ASA 60-
34	B03400271R	INGR.DOPPIO Z=16 22 CON MOZZO	DOUBLE GEAR Z=16 22 WITH HUB	ENGRANAGE	ZAHNRADPAAR	ENGR.DOBLE Z=16 22 CON BUJE
35	B01534416R	SPES. 35 43 1 ZINCATO	SHIM	ENTRETOISE	AUSGLEICHSCHEIBE 35X43X1	ESPES. 35 43 1 CINCADO
36	B07VP0513R	TENDICATENA IN NYLON	NYLON CHAIN TIGHTENER	TENDEUR DE CHAINE EN NYLON		TENSOR DE CADENA DE NAILON
37	B0C003172R	ATTACCO TENDICATENA	CHAIN TIGHTENER COUPLING	ATTELAGE TENDEUR DE CHAINE	KETTENSPANNER BEFESTIGUNG	CONEXI N TENSOR DE CADENA
38	F01020164R	VITE M12X1,75X70 U5737 8.8ZN	SCREW M12X1,75X70 U5737 8.8ZN	VIS M12X1,75X70 ZN	SCHR. M12X1,75X70 U5737 8.8 ZN	TORNILLO M12X1,75X70 U5737 8.
39	F01410076R	ROS.M12 13X 24X2,5 U6592 ZN	WASHER 12 13X 24X2,5 U6592 ZN	RONDEL. M12 13X24X2,5 U6592 ZN	SCHEIBE M12 13X24X2,5 U6592 ZN	ARAND.M12 13X 24X2,5 U6592 ZN
40	B01523831R	RALLA 12 33 5	FIFTH WHEEL	BUTEE	UMBORDELUNG 12 33 5	RANGUA 12 33 5
41	B07SP0002R	CARTER SX PU	PU LEFT GUARD	CARTER GAUCHE PU	CARTER LINKS PU	C RTER IZQ PU
42	F01020436R	VITE M8X1,25X20 U5739 8.8ZN	SCR. M8X1,25X20 U5739 8.8ZN	VIS M8X1,25X 20 U5739 8.8 ZN	SCHRAUBE M8X1,25X20U5739 8.8ZN	TORNILLO M8X1,25X20 U5739 8.8
43	B03500279R	CONTRALBERO CORTO PU 200	SHORT COUNTERSHAFT 200	CONTRE ARBRE COURT PU 200	KURZE VORGELEGEWELLE 200	CONTRA- RBOL CORTO PU 200
44	B01700040R	ANEL. D ARR. ALBERO 40-E UNI 3	SEEGER RING	BAGUE SEEGER	SEEGERRING 40-E	ANIL. DE PARAD. RBOL 40-E UNI
45	B01300126R	SPES. 40 48 1 ZINC.ST_013	SHIM	ENTRETOISE	DISTANZSTUECK 40 408 1	ESPES. 40 48 1 CINC.EST_013
46	B01534395R	RALLA 35.5X 62 X 3 ZINCATO	FIFTH WHEEL	BUTEE	SPEZIALSCHEIBE	RANGUA 35.5X 62 X 3 CINCADO
47	B01300607R	DISTANZIALE 35X42X35	SPACER	ENTRETOISE	DISTANZSTUECK 35X42X35	DISTANCIADOR 35X42X35
48	B02353035R	SUPP.FLANG.TONDO 35 LAMIERA	BEARING FLANGED SUPPORT D.35	SUPPORT FLANGE ROND 35 LAMES	FLANSCHLAGER	SOPORTE BRIDA REDONDO 35 CHA
49	F01020470R	VITE M10X1,5X20 U5739 8.8ZN	SCR. M10X1,5X20 U5739 8.8ZN	VIS M10X1,5X20 U5739 8.8 ZN	SCHRAUBE M10X1,5X20 U5739 ZN	TORNILLO M10X1,5X20 U5739 8
50	F01410062R	ROS.M10 10,5X 18X 2 U6592 ZN	WASHER M10 10,5X 18X 2 U6592	RONDELLE M10 10,5X18X2 ZN	DICHTUNGSRING M10 10,5X18X2 ZN	ARAND.M10 10,5X 18X 2 U6592 ZN
51	B030E1027R	CATENA RULLI ISO 16 B-1 27M	ROLLER CHAIN ISO16 B-1 27M	CHAINE ROULEAUX	WALZENKETTE	CADENA DE LOS RODILLOS ISO 16
52	B03400241R	MOZZO DI SICUREZZA PICK-UP	SURETY HUB	MOYEU DE SURETE	SICHERHEIT NABE	BUJE DE SEGURIDAD PICK-UP
53	B07S01001R	MOZZO CALETTATO	SPLINED HUB	MOYEU	VERZAHNTE NABE	BUJE ENSAMBLADO
54	B02500001R	BRONZINA 50X56 L38	BUSHING 50X56 L38	COUSSINET	LAGERBUCHSE	COJINETE 50X56 L38
55	B00170845R	VITE ZINCATA M 8X45-10.9 U5737	ZN SCREW M 8X45-10.9 U5737	VIS	SCHRAUBE	TORNILLO CINCADO M 8X45-10.9 U
56	B00511057R	BUSSOLA DI TRANCIAMENTO	BUSHING	BAGUE	BUCHSE	CASQUILLO DE CIZALLADO
57	B008B0208R	DADO M 8X1,25 D980 8 ZN	NUT	ECROU	SELBSTSICHERNDE MUTTER M8 KL8	TUERCA M 8X1,25 D980 8

TAV_170

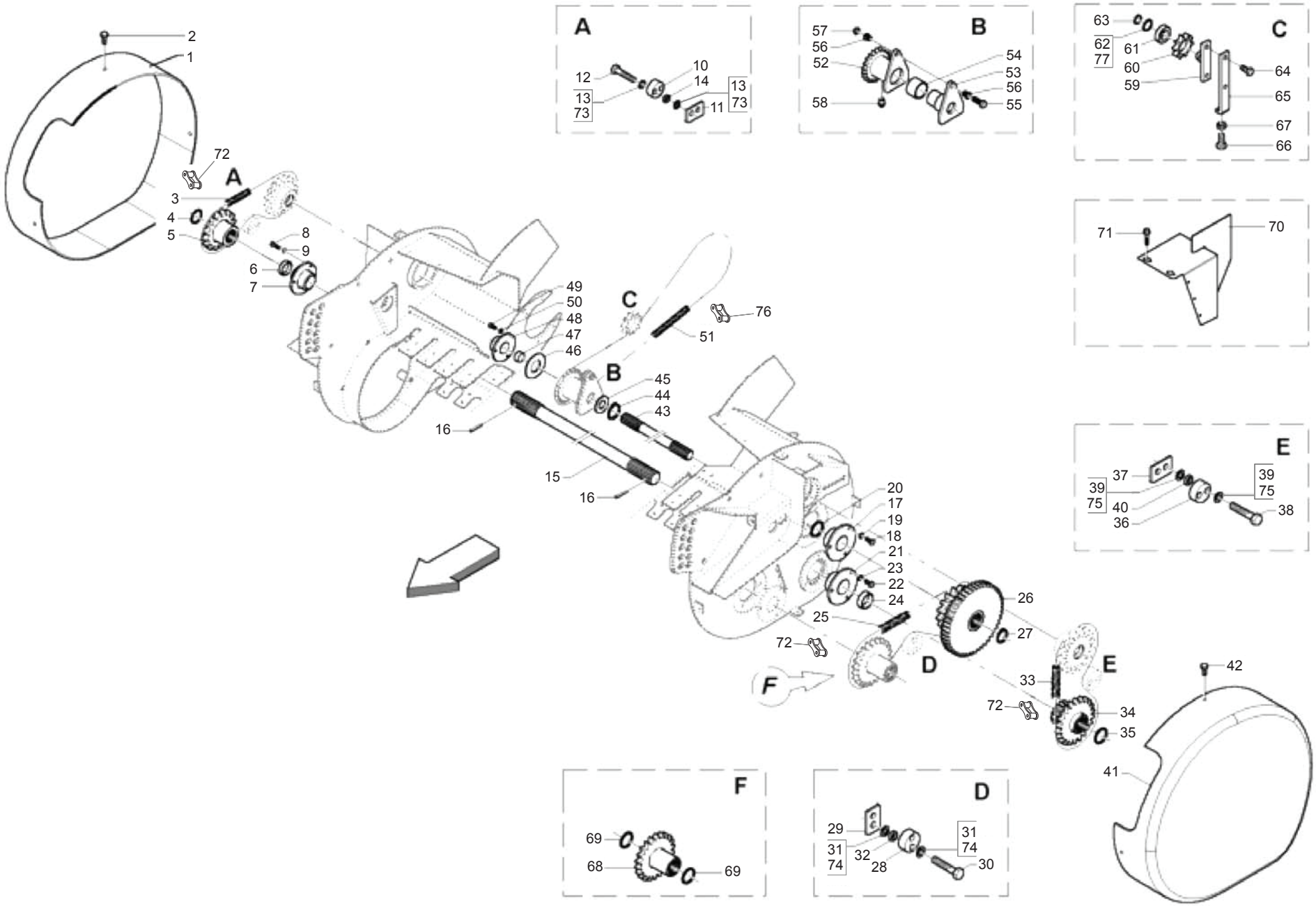

MASCHIO

cod. F07022338

TRASMISSIONE PICK-UP M
PICK-UP M TRANSMISSION

Pos.	Cod.	Descrizione	Description	Description	Benennung	Descripcion
58	B04200610R	INGRASS.A SFERE M6X1 LUNGO	GREASE NIPPLE	GRAISSEUR HYDRAULIQUE	GERADER SCHMIERNIPPEL M6X1	ENGRASADOR DE ESFERAS M6X1
59	B07S01013R	TENDITORE PU	PICK-UP TENSIONER	TENDEUR PU	PICK-UP SPANNER	TENSOR PU
60	B03400274R	CORONA Z10-1 ISO F52 TRATT	SPROCKET Z=10-1	ENGRANAGE SPECIAL TRAITE	ZAHNKRANZ Z=10-1	CORONA Z10-1 ISO F52 TRA
61	F04010170R	CUSC.D25 D52 B15 6205 2RS EX	BEARING D25 D52 B15 6205 2RS	ROULEMENT 6205 2RS	LAGER 6205 2RS	COJIN.D25 D52 B15 6205 2RS EX
62	B01300104R	SPES. 25,5 37 0,2	SHIM	ENTRETOISE	BEILAGSCHEIBE 25,5 37 0,2	ESPES. 25,5 37 0,2
63	F02050101R	ANELLO E. DE 25X 1,2 U7435 C7	SEEGER RING E. 25X1,2 7435 C70	SEEGER E. 25X 1,2 U7435 C70	SEEGERING E. 25X 1,2 U7435 C70	ANILLO E. DE 25X 1,2 U7435 C7
64	F01020510R	VITE M12X1,75X30 U5739 8.8ZN	SCR. M12X1,75X30 U5739 8.8ZN	VIS M12X1,75X30 U5739 8.8ZN	SCHRAU.M12X1,75X30 U5739 8.8ZN	TORNILLO M12X1,75X30 U5739
65	B0C6P0065R	TIRANTE INFALDATORE	FEEDER TIE ROD	TIRANT AMENEUR	ZUGSTAB RAFFER	TIRANTE EMBOCADOR
66	F01020519R	VITE M12X1,75X 60 U5739 8.8ZN	SCREW M12X1,75X 60 U5739 8.8ZN			TORNILLO M12X1,75X 60 U5739 8
67	F01200293R	DADO M12X1,75 U5588 CL8 ZN	NUT M12X1,75 U5588 6S ZN	ECROU M12X1,75 U5588 6S ZN	MUTTER M12X1,75 U5588 6S ZN	TUERCA M12X1,75 U5588 CL8 ZN
68	B03400240R	INGR. Z=22-3 4 ISO CON MOZZO	GEAR Z=22-3 4 ISO WITH HUB	ENGRENAGE	ZAHNRAD Z=22-3 4 ISO MIT NAB	ENGR. Z=22-3 4 ISO CON BUJE
69	B01300101R	SPES. 30,3 40 1 ZINCATO	SHIM GALV	ENTRETOISE GALV	DISTANZSTUECK 30,3 40 1	ESPES. 30,3 40 1 CINCADO
70	BSP000026R	CARTER SICUREZZA NEW	SAFETY NEW CARTER			C RTER DE SEGURIDAD NEW
71	B00370001R	VITE TE M 8X16 A SEZ.TRILOBATA	SCREW TRE M 8X16 SEZ TROUBLED	VIS	SCHRAUBE M 8X15	TORNILLO CHEX M 8X16 A SECC. T
72	B03110007R	GIUNTO MOLL.N.26 ASA60-1	SPRING JOINT N. 26 ASA 60-1	JOINT	KETTENSCHLOSS	JUNTA DE MUELLE N. 26 ASA60-1
73	F01420120R	ROS.M12 13X36X2,5 U6593 ZN	WASHER M12 13X36X2,5 U6593 ZN	RONDELLE M12 13X36X2,5 ZN		ARAND.M12 13X36X2,5 U6593 ZN
74	F01410076R	ROS.M12 13X 24X2,5 U6592 ZN	WASHER 12 13X 24X2,5 U6592 ZN	RONDEL. M12 13X24X2,5 U6592 ZN	SCHEIBE M12 13X24X2,5 U6592 ZN	ARAND.M12 13X 24X2,5 U6592 ZN
75	F01420120R	ROS.M12 13X36X2,5 U6593 ZN	WASHER M12 13X36X2,5 U6593 ZN	RONDELLE M12 13X36X2,5 ZN		ARAND.M12 13X36X2,5 U6593 ZN
76	B030E0017R	GIUNTO MOLL N26 ISO 16 B-1	SPRING JOINT N.26 ISO 16 B-1	JOINT RESSORT	KETTENFEDER	JUNTA DE MUELL N26 ISO 16 B-1
77	B01300104R	SPES. 25,5 37 0,2	SHIM	ENTRETOISE	BEILAGSCHEIBE 25,5 37 0,2	ESPES. 25,5 37 0,2

TAV_175

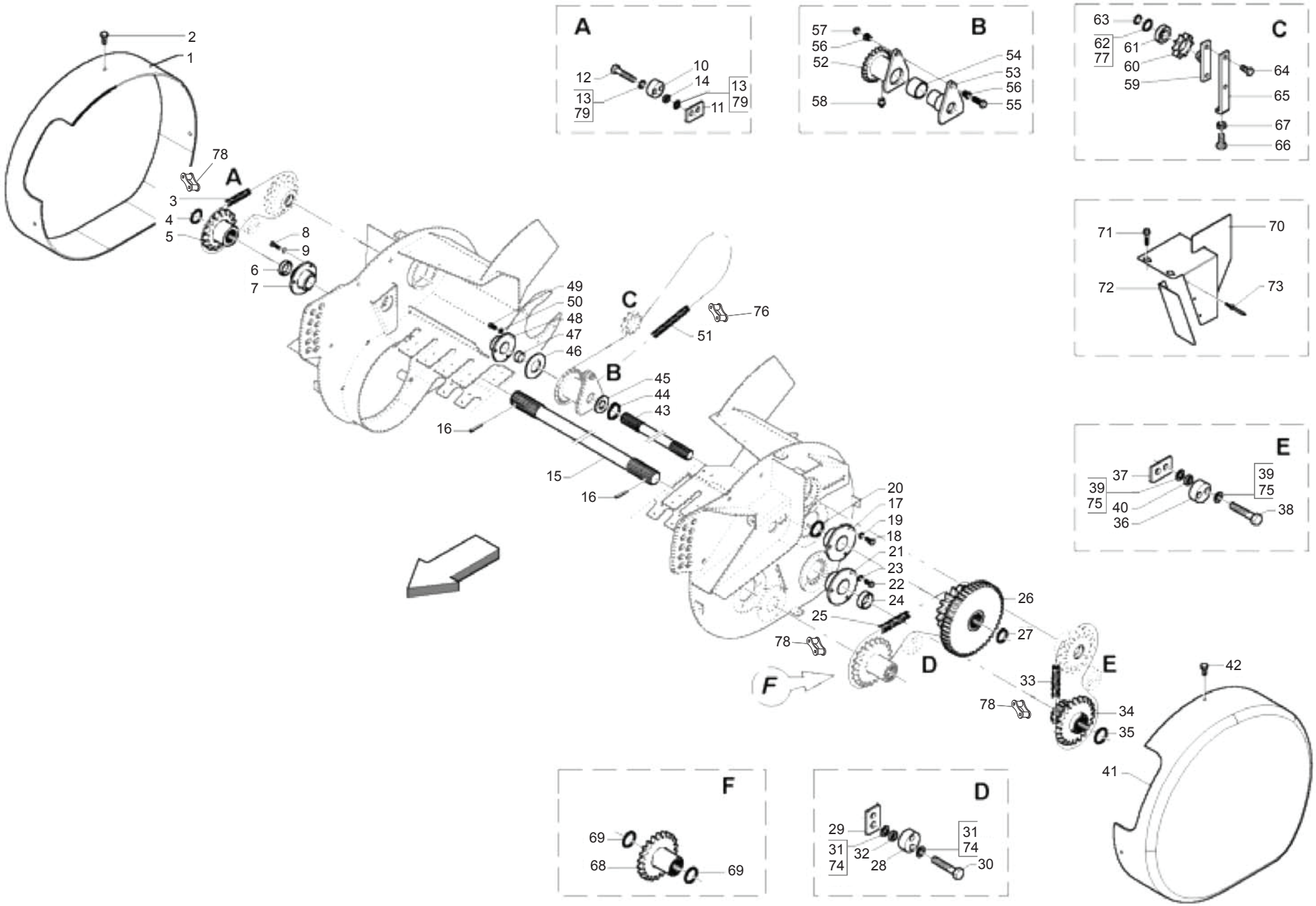

MASCHIO

cod. F07022338

TRASMISSIONE PICK-UP L
PICK-UP L TRANSMISSION

TAV_175

Pos.	Cod.	Descrizione	Description	Description	Benennung	Descripcion
1	B07SP0001R	CARTER DX PU	PU RIGHT GUARD	CARTER DROIT PU	CARTER RECHTS PU	C RTER DER PU
2	F01020436R	VITE M8X1,25X20 U5739 8.8ZN	SCR. M8X1,25X20 U5739 8.8ZN	VIS M8X1,25X 20 U5739 8.8 ZN	SCHRAUBE M8X1,25X20U5739 8.8ZN	TORNILLO M8X1,25X20 U5739 8.8
3	B03111057R	CATENA RULLI ASA 60-1 57 MGL	ROLLER CHAIN	CHAINE ROULEAUX	KETTE ASA 60-1 57MGL ISO1	CADENA DE LOS RODILLOS ASA 60-
4	B01534416R	SPES. 35 43 1 ZINCATO	SHIM	ENTRETOISE	AUSGLEICHSCHEIBE 35X43X1	ESPES. 35 43 1 CINCADO
5	B03400003R	INGR. Z=22; 3 4; ISO 12B-1	GEAR Z=22-3 4	ENGRANAGE	KETTENRAD Z=22-3 4	ENGR. Z=22; 3 4; ISO 12B-1 PU
6	B01330957R	DISTANZIALE 35-48-7	SPACER	ENTRETOISE	DISTANZSTUECK 35X48X7	DISTANCIADOR 35-48-7
7	B02353035R	SUPP.FLANG.TONDO 35 LAMIERA	BEARING FLANGED SUPPORT D.35	SUPPORT FLANGE ROND 35 LAMES	FLANSCHLAGER	SOPORTE BRIDA REDONDO 35 CHA
8	F01020472R	VITE M10X1,5X25 U5739 8.8ZN	SCR. M10X1,5X25 U5739 8.8ZN	VIS M10X1,5X25 U5739 8.8 ZN	SCHRAUBE M10X1,5X25 U5739 8.8	TORNILLO M10X1,5X25 U5739 8.8
9	F01410062R	ROS.M10 10,5X 18X 2 U6592 ZN	WASHER M10 10,5X 18X 2 U6592	RONDELLE M10 10,5X18X2 ZN	DICHTUNGSRING M10 10,5X18X2 ZN	ARAND.M10 10,5X 18X 2 U6592 ZN
10	B07VP0513R	TENDICATENA IN NYLON	NYLON CHAIN TIGHTENER	TENDEUR DE CHAINE EN NYLON		TENSOR DE CADENA DE NAILON
11	B0C003172R	ATTACCO TENDICATENA	CHAIN TIGHTENER COUPLING	ATTELAGE TENDEUR DE CHAINE	KETTENSPANNER BEFESTIGUNG	CONEXI N TENSOR DE CADENA
12	F01020164R	VITE M12X1,75X70 U5737 8.8ZN	SCREW M12X1,75X70 U5737 8.8ZN	VIS M12X1,75X70 ZN	SCHR. M12X1,75X70 U5737 8.8 ZN	TORNILLO M12X1,75X70 U5737 8.
13	F01420120R	ROS.M12 13X36X2,5 U6593 ZN	WASHER M12 13X36X2,5 U6593 ZN	RONDELLE M12 13X36X2,5 ZN		ARAND.M12 13X36X2,5 U6593 ZN
14	B01523831R	RALLA 12 33 5	FIFTH WHEEL	BUTEE	UMBORDELUNG 12 33 5	RANGUA 12 33 5
15	B03500045R	CONTRALBERO LUNGO PU 220	COUNTERSHAFT 220	CONTRE-ARBRE 200	VORGELEGEWELLE	CONTRA- RBOL LARGO PU 220
16	F02100124R	SPINA E.P. 6X 50 U6873 C70 BR	PIN EL. 6X50 U6873 C70 BR	GOUJON 6X50 U6873 C70 BR	STIFT 6X50 U6873 C70 BR	CLAVIJA EL.P. 6X 50 U6873 C70
17	B02353035R	SUPP.FLANG.TONDO 35 LAMIERA	BEARING FLANGED SUPPORT D.35	SUPPORT FLANGE ROND 35 LAMES	FLANSCHLAGER	SOPORTE BRIDA REDONDO 35 CHA
18	F01020470R	VITE M10X1,5X20 U5739 8.8ZN	SCR. M10X1,5X20 U5739 8.8ZN	VIS M10X1,5X20 U5739 8.8 ZN	SCHRAUBE M10X1,5X20 U5739 ZN	TORNILLO M10X1,5X20 U5739 8
19	F01410062R	ROS.M10 10,5X 18X 2 U6592 ZN	WASHER M10 10,5X 18X 2 U6592	RONDELLE M10 10,5X18X2 ZN	DICHTUNGSRING M10 10,5X18X2 ZN	ARAND.M10 10,5X 18X 2 U6592 ZN
20	B01534416R	SPES. 35 43 1 ZINCATO	SHIM	ENTRETOISE	AUSGLEICHSCHEIBE 35X43X1	ESPES. 35 43 1 CINCADO
21	B02353035R	SUPP.FLANG.TONDO 35 LAMIERA	BEARING FLANGED SUPPORT D.35	SUPPORT FLANGE ROND 35 LAMES	FLANSCHLAGER	SOPORTE BRIDA REDONDO 35 CHA
22	F01020472R	VITE M10X1,5X25 U5739 8.8ZN	SCR. M10X1,5X25 U5739 8.8ZN	VIS M10X1,5X25 U5739 8.8 ZN	SCHRAUBE M10X1,5X25 U5739 8.8	TORNILLO M10X1,5X25 U5739 8.8
23	F01410062R	ROS.M10 10,5X 18X 2 U6592 ZN	WASHER M10 10,5X 18X 2 U6592	RONDELLE M10 10,5X18X2 ZN	DICHTUNGSRING M10 10,5X18X2 ZN	ARAND.M10 10,5X 18X 2 U6592 ZN
24	B01330957R	DISTANZIALE 35-48-7	SPACER	ENTRETOISE	DISTANZSTUECK 35X48X7	DISTANCIADOR 35-48-7
25	B03111046R	CATENA RULLI ASA 60-1 46 MGL	ROLLER CHAIN ASA60-1 46 MGL	CHAINE ROULEAUX	KETTE DER WALZEN	CADENA DE LOS RODILLOS ASA 60-
26	B03L34402R	INGR. DOPPIO Z=17 48 CON MOZZO	GEAR	ENGRANAGE	ZAHNRADPAAR Z=17 48	ENGR. DOBLE Z=17 48 CON BUJE
27	B01700035R	ANEL. D ARR. ALB. 35-E UNI3653	SEEGER RING	BAGUE SEEGER	SEEGERRING 35-E	ANIL. DE PARAD. RB. 35-E UNI3
28	B07VP0513R	TENDICATENA IN NYLON	NYLON CHAIN TIGHTENER	TENDEUR DE CHAINE EN NYLON		TENSOR DE CADENA DE NAILON
29	B0C003172R	ATTACCO TENDICATENA	CHAIN TIGHTENER COUPLING	ATTELAGE TENDEUR DE CHAINE	KETTENSPANNER BEFESTIGUNG	CONEXI N TENSOR DE CADENA
30	F01020160R	VITE M12X1,75X60 U5737 8.8ZN	SCR. M12X1,75X60 U5737 8.8ZN	VIS M12X1,75X60 U5737 8.8 ZN	SCHRA.M12X1,75X60 U5737 8.8 ZN	TORNILLO M12X1,75X60 U5737 8.
31	F01410076R	ROS.M12 13X 24X2,5 U6592 ZN	WASHER 12 13X 24X2,5 U6592 ZN	RONDEL. M12 13X24X2,5 U6592 ZN	SCHEIBE M12 13X24X2,5 U6592 ZN	ARAND.M12 13X 24X2,5 U6592 ZN
32	B01523831R	RALLA 12 33 5	FIFTH WHEEL	BUTEE	UMBORDELUNG 12 33 5	RANGUA 12 33 5
33	B03111057R	CATENA RULLI ASA 60-1 57 MGL	ROLLER CHAIN	CHAINE ROULEAUX	KETTE ASA 60-1 57MGL ISO1	CADENA DE LOS RODILLOS ASA 60-
34	B03400271R	INGR.DOPPIO Z=16 22 CON MOZZO	DOUBLE GEAR Z=16 22 WITH HUB	ENGRANAGE	ZAHNRADPAAR	ENGR.DOBLE Z=16 22 CON BUJE
35	B01534416R	SPES. 35 43 1 ZINCATO	SHIM	ENTRETOISE	AUSGLEICHSCHEIBE 35X43X1	ESPES. 35 43 1 CINCADO
36	B07VP0513R	TENDICATENA IN NYLON	NYLON CHAIN TIGHTENER	TENDEUR DE CHAINE EN NYLON		TENSOR DE CADENA DE NAILON
37	B0C003172R	ATTACCO TENDICATENA	CHAIN TIGHTENER COUPLING	ATTELAGE TENDEUR DE CHAINE	KETTENSPANNER BEFESTIGUNG	CONEXI N TENSOR DE CADENA
38	F01020164R	VITE M12X1,75X70 U5737 8.8ZN	SCREW M12X1,75X70 U5737 8.8ZN	VIS M12X1,75X70 ZN	SCHR. M12X1,75X70 U5737 8.8 ZN	TORNILLO M12X1,75X70 U5737 8.
39	F01420120R	ROS.M12 13X36X2,5 U6593 ZN	WASHER M12 13X36X2,5 U6593 ZN	RONDELLE M12 13X36X2,5 ZN		ARAND.M12 13X36X2,5 U6593 ZN
40	B01523831R	RALLA 12 33 5	FIFTH WHEEL	BUTEE	UMBORDELUNG 12 33 5	RANGUA 12 33 5
41	B07SP0002R	CARTER SX PU	PU LEFT GUARD	CARTER GAUCHE PU	CARTER LINKS PU	C RTER IZQ PU
42	F01020436R	VITE M8X1,25X20 U5739 8.8ZN	SCR. M8X1,25X20 U5739 8.8ZN	VIS M8X1,25X 20 U5739 8.8 ZN	SCHRAUBE M8X1,25X20U5739 8.8ZN	TORNILLO M8X1,25X20 U5739 8.8
43	B03500280R	CONTRALBERO CORTO PU 220	SHORT COUNTER SHAFT 220	CONTRE ARBRE COURT PU 220	KURZE VORGELEGEWELLE 220	CONTRA- RBOL CORTO PU 220
44	B01700040R	ANEL. D ARR. ALBERO 40-E UNI 3	SEEGER RING	BAGUE SEEGER	SEEGERRING 40-E	ANIL. DE PARAD. RBOL 40-E UNI
45	B01300126R	SPES. 40 48 1 ZINC.ST_013	SHIM	ENTRETOISE	DISTANZSTUECK 40 408 1	ESPES. 40 48 1 CINC.EST_013
46	B01534395R	RALLA 35.5X 62 X 3 ZINCATO	FIFTH WHEEL	BUTEE	SPEZIALSCHEIBE	RANGUA 35.5X 62 X 3 CINCADO
47	B01300607R	DISTANZIALE 35X42X35	SPACER	ENTRETOISE	DISTANZSTUECK 35X42X35	DISTANCIADOR 35X42X35
48	B02353035R	SUPP.FLANG.TONDO 35 LAMIERA	BEARING FLANGED SUPPORT D.35	SUPPORT FLANGE ROND 35 LAMES	FLANSCHLAGER	SOPORTE BRIDA REDONDO 35 CHA
49	F01020470R	VITE M10X1,5X20 U5739 8.8ZN	SCR. M10X1,5X20 U5739 8.8ZN	VIS M10X1,5X20 U5739 8.8 ZN	SCHRAUBE M10X1,5X20 U5739 ZN	TORNILLO M10X1,5X20 U5739 8
50	F01410062R	ROS.M10 10,5X 18X 2 U6592 ZN	WASHER M10 10,5X 18X 2 U6592	RONDELLE M10 10,5X18X2 ZN	DICHTUNGSRING M10 10,5X18X2 ZN	ARAND.M10 10,5X 18X 2 U6592 ZN
51	B030E1027R	CATENA RULLI ISO 16 B-1 27M	ROLLER CHAIN ISO16 B-1 27M	CHAINE ROULEAUX	WALZENKETTE	CADENA DE LOS RODILLOS ISO 16
52	B03400241R	MOZZO DI SICUREZZA PICK-UP	SURETY HUB	MOYEU DE SURETE	SICHERHEIT NABE	BUJE DE SEGURIDAD PICK-UP
53	B07S01001R	MOZZO CALETTATO	SPLINED HUB	MOYEU	VERZAHNTE NABE	BUJE ENSAMBLADO
54	B02500001R	BRONZINA 50X56 L38	BUSHING 50X56 L38	COUSSINET	LAGERBUCHSE	COJINETE 50X56 L38
55	B00170845R	VITE ZINCATA M 8X45-10.9 U5737	ZN SCREW M 8X45-10.9 U5737	VIS	SCHRAUBE	TORNILLO CINCADO M 8X45-10.9 U
56	B00511057R	BUSSOLA DI TRANCIAMENTO	BUSHING	BAGUE	BUCHSE	CASQUILLO DE CIZALLADO
57	B008B0208R	DADO M 8X1,25 D980 8 ZN	NUT	ECROU	SELBSTSICHERNDE MUTTER M8 KL8	TUERCA M 8X1,25 D980 8

TAV_175

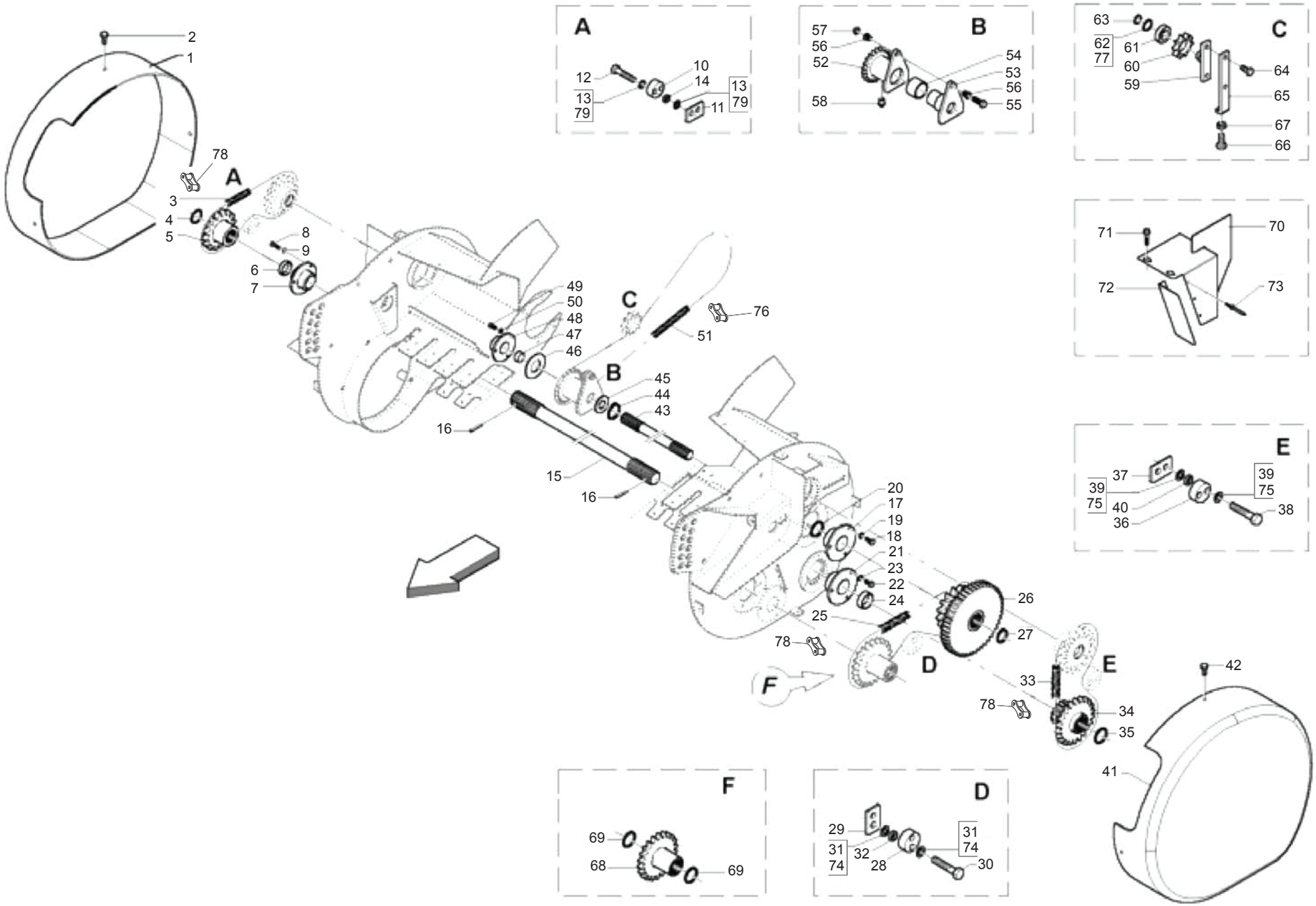

MASCHIO

cod. F07022338

TRASMISSIONE PICK-UP L
PICK-UP L TRANSMISSION

Pos.	Cod.	Descrizione	Description	Description	Benennung	Descripcion
58	B04200610R	INGRASS.A SFERE M6X1 LUNGO	GREASE NIPPLE	GRAISSEUR HYDRAULIQUE	GERADER SCHMIERNIPPEL M6X1	ENGRASADOR DE ESFERAS M6X1
59	B07S01013R	TENDITORE PU	PICK-UP TENSIONER	TENDEUR PU	PICK-UP SPANNER	TENSOR PU
60	B03400274R	CORONA Z10-1 ISO F52 TRATT	SPROCKET Z=10-1	ENGRANAGE SPECIAL TRAITE	ZAHNKRANZ Z=10-1	CORONA Z10-1 ISO F52 TRA
61	F04010170R	CUSC.D25 D52 B15 6205 2RS EX	BEARING D25 D52 B15 6205 2RS	ROULEMENT 6205 2RS	LAGER 6205 2RS	COJIN.D25 D52 B15 6205 2RS EX
62	B01300104R	SPES. 25,5 37 0,2	SHIM	ENTRETOISE	BEILAGSCHEIBE 25,5 37 0,2	ESPES. 25,5 37 0,2
63	F02050101R	ANELLO E. DE 25X 1,2 U7435 C7	SEEGER RING E. 25X1,2 7435 C70	SEEGER E. 25X 1,2 U7435 C70	SEEGERING E. 25X 1,2 U7435 C70	ANILLO E. DE 25X 1,2 U7435 C7
64	F01020510R	VITE M12X1,75X30 U5739 8.8ZN	SCR. M12X1,75X30 U5739 8.8ZN	VIS M12X1,75X30 U5739 8.8ZN	SCHRAU.M12X1,75X30 U5739 8.8ZN	TORNILLO M12X1,75X30 U5739
65	B0C6P0065R	TIRANTE INFALDATORE	FEEDER TIE ROD	TIRANT AMENEUR	ZUGSTAB RAFFER	TIRANTE EMBOCADOR
66	F01020519R	VITE M12X1,75X 60 U5739 8.8ZN	SCREW M12X1,75X 60 U5739 8.8ZN			TORNILLO M12X1,75X 60 U5739 8
67	F01200293R	DADO M12X1,75 U5588 CL8 ZN	NUT M12X1,75 U5588 6S ZN	ECROU M12X1,75 U5588 6S ZN	MUTTER M12X1,75 U5588 6S ZN	TUERCA M12X1,75 U5588 CL8 ZN
68	B03400075R	INGRANAGGIO Z=22 3 4 CON MOZZO	GEAR Z=22-3 4 WITH HUB	ENGRENAGE	ZAHNRAD	ENGRANAJE Z22-3 4 CON BUJE
69	B01534416R	SPES. 35 43 1 ZINCATO	SHIM	ENTRETOISE	AUSGLEICHSCHEIBE 35X43X1	ESPES. 35 43 1 CINCADO
70	BSP000026R	CARTER SICUREZZA NEW	SAFETY NEW CARTER			C RTER DE SEGURIDAD NEW
71	B00370001R	VITE TE M 8X16 A SEZ.TRILOBATA	SCREW TRE M 8X16 SEZ TROUBLED	VIS	SCHRAUBE M 8X15	TORNILLO CHEX M 8X16 A SECC. T
72	B0C005384R	PROLUNGA CARTER SICUREZZA PUL	SAFETY GUARD EXTENSION	RALLONGE CARTER SURETE	VERLAENGERUNG CARTER	EXTENSOR C RTER DE SEGURIDA
73	F02250111R	RIVETTO STR. 4 X 6 U9200A AL	RIVET 4 X6	RIVET 4 X6	KUPFERNIET 4 X6	REMACHE EXTR. 4 X 6 U9200A A
74	F01420120R	ROS.M12 13X36X2,5 U6593 ZN	WASHER M12 13X36X2,5 U6593 ZN	RONDELLE M12 13X36X2,5 ZN		ARAND.M12 13X36X2,5 U6593 ZN
75	F01410076R	ROS.M12 13X 24X2,5 U6592 ZN	WASHER 12 13X 24X2,5 U6592 ZN	RONDEL. M12 13X24X2,5 U6592 ZN	SCHEIBE M12 13X24X2,5 U6592 ZN	ARAND.M12 13X 24X2,5 U6592 ZN
76	B030E0017R	GIUNTO MOLL N26 ISO 16 B-1	SPRING JOINT N.26 ISO 16 B-1	JOINT RESSORT	KETTENFEDER	JUNTA DE MUELL N26 ISO 16 B-1
77	B01300104R	SPES. 25,5 37 0,2	SHIM	ENTRETOISE	BEILAGSCHEIBE 25,5 37 0,2	ESPES. 25,5 37 0,2
78	B03110007R	GIUNTO MOLL.N.26 ASA60-1	SPRING JOINT N. 26 ASA 60-1	JOINT	KETTENSCHLOSS	JUNTA DE MUELLE N. 26 ASA60-1
79	F01410076R	ROS.M12 13X 24X2,5 U6592 ZN	WASHER 12 13X 24X2,5 U6592 ZN	RONDEL. M12 13X24X2,5 U6592 ZN	SCHEIBE M12 13X24X2,5 U6592 ZN	ARAND.M12 13X 24X2,5 U6592 ZN

TAV_180

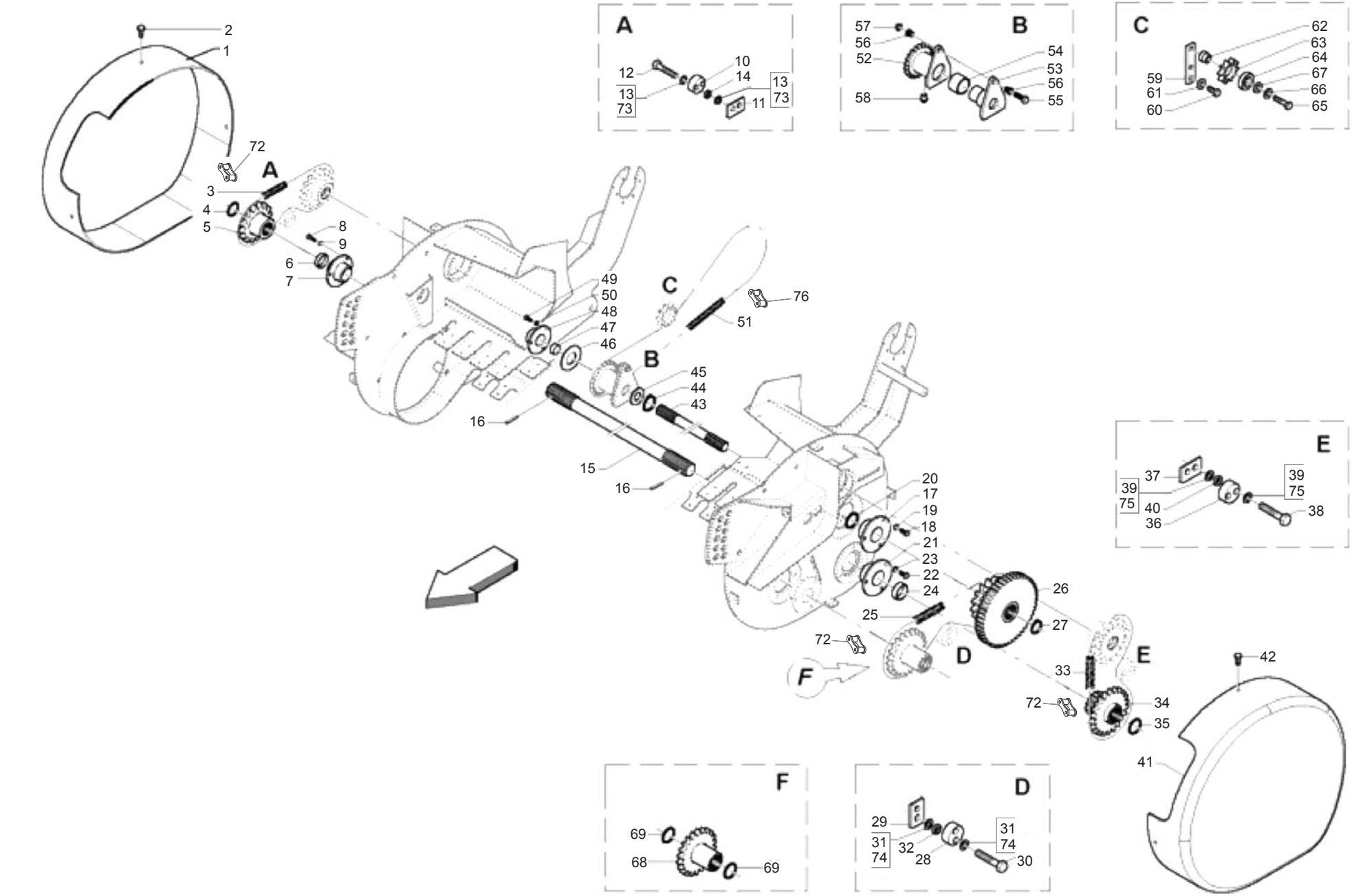

MASCHIO

cod. F07022338

TRASMISSIONE PICK-UP M CUT
PICK-UP M CUT TRANSMISSION

TAV_180

Pos.	Cod.	Descrizione	Description	Description	Benennung	Descripcion
1	B07SP0001R	CARTER DX PU	PU RIGHT GUARD	CARTER DROIT PU	CARTER RECHTS PU	C RTER DER PU
2	F01020436R	VITE M8X1,25X20 U5739 8.8ZN	SCR. M8X1,25X20 U5739 8.8ZN	VIS M8X1,25X 20 U5739 8.8 ZN	SCHRAUBE M8X1,25X20U5739 8.8ZN	TORNILLO M8X1,25X20 U5739 8.8
3	B03111057R	CATENA RULLI ASA 60-1 57 MGL	ROLLER CHAIN	CHAINE ROULEAUX	KETTE ASA 60-1 57MGL ISO1	CADENA DE LOS RODILLOS ASA 60-
4	B01534416R	SPES. 35 43 1 ZINCATO	SHIM	ENTRETOISE	AUSGLEICHSCHEIBE 35X43X1	ESPES. 35 43 1 CINCADO
5	B03400003R	INGR. Z=22; 3 4; ISO 12B-1	GEAR Z=22-3 4	ENGRANAGE	KETTENRAD Z=22-3 4	ENGR. Z=22; 3 4; ISO 12B-1 PU
6	B01330957R	DISTANZIALE 35-48-7	SPACER	ENTRETOISE	DISTANZSTUECK 35X48X7	DISTANCIADOR 35-48-7
7	B02353035R	SUPP.FLANG.TONDO 35 LAMIERA	BEARING FLANGED SUPPORT D.35	SUPPORT FLANGE ROND 35 LAMES	FLANSCHLAGER	SOPORTE BRIDA REDONDO 35 CHA
8	F01020472R	VITE M10X1,5X25 U5739 8.8ZN	SCR. M10X1,5X25 U5739 8.8ZN	VIS M10X1,5X25 U5739 8.8 ZN	SCHRAUBE M10X1,5X25 U5739 8.8	TORNILLO M10X1,5X25 U5739 8.8
9	F01410062R	ROS.M10 10,5X 18X 2 U6592 ZN	WASHER M10 10,5X 18X 2 U6592	RONDELLE M10 10,5X18X2 ZN	DICHTUNGSRING M10 10,5X18X2 ZN	ARAND.M10 10,5X 18X 2 U6592 ZN
10	B07VP0513R	TENDICATENA IN NYLON	NYLON CHAIN TIGHTENER	TENDEUR DE CHAINE EN NYLON		TENSOR DE CADENA DE NAILON
11	B0C003172R	ATTACCO TENDICATENA	CHAIN TIGHTENER COUPLING	ATTELAGE TENDEUR DE CHAINE	KETTENSPANNER BEFESTIGUNG	CONEXI N TENSOR DE CADENA
12	F01020164R	VITE M12X1,75X70 U5737 8.8ZN	SCREW M12X1,75X70 U5737 8.8ZN	VIS M12X1,75X70 ZN	SCHR. M12X1,75X70 U5737 8.8 ZN	TORNILLO M12X1,75X70 U5737 8.
13	F01410076R	ROS.M12 13X 24X2,5 U6592 ZN	WASHER 12 13X 24X2,5 U6592 ZN	RONDEL. M12 13X24X2,5 U6592 ZN	SCHEIBE M12 13X24X2,5 U6592 ZN	ARAND.M12 13X 24X2,5 U6592 ZN
14	B01523831R	RALLA 12 33 5	FIFTH WHEEL	BUTEE	UMBORDELUNG 12 33 5	RANGUA 12 33 5
15	B03A34361R	CONTRALBERO LUNGO PU 200	COUNTERSHAFT	CONTRE ARBRE	VORGELEGEWELLE 200	CONTRA- RBOL LARGO PU 200
16	F02100124R	SPINA E.P. 6X 50 U6873 C70 BR	PIN EL. 6X50 U6873 C70 BR	GOUJON 6X50 U6873 C70 BR	STIFT 6X50 U6873 C70 BR	CLAVIJA EL.P. 6X 50 U6873 C70
17	B02353035R	SUPP.FLANG.TONDO 35 LAMIERA	BEARING FLANGED SUPPORT D.35	SUPPORT FLANGE ROND 35 LAMES	FLANSCHLAGER	SOPORTE BRIDA REDONDO 35 CHA
18	F01020470R	VITE M10X1,5X20 U5739 8.8ZN	SCR. M10X1,5X20 U5739 8.8ZN	VIS M10X1,5X20 U5739 8.8 ZN	SCHRAUBE M10X1,5X20 U5739 ZN	TORNILLO M10X1,5X20 U5739 8
19	F01410062R	ROS.M10 10,5X 18X 2 U6592 ZN	WASHER M10 10,5X 18X 2 U6592	RONDELLE M10 10,5X18X2 ZN	DICHTUNGSRING M10 10,5X18X2 ZN	ARAND.M10 10,5X 18X 2 U6592 ZN
20	B01534416R	SPES. 35 43 1 ZINCATO	SHIM	ENTRETOISE	AUSGLEICHSCHEIBE 35X43X1	ESPES. 35 43 1 CINCADO
21	B02353035R	SUPP.FLANG.TONDO 35 LAMIERA	BEARING FLANGED SUPPORT D.35	SUPPORT FLANGE ROND 35 LAMES	FLANSCHLAGER	SOPORTE BRIDA REDONDO 35 CHA
22	F01020472R	VITE M10X1,5X25 U5739 8.8ZN	SCR. M10X1,5X25 U5739 8.8ZN	VIS M10X1,5X25 U5739 8.8 ZN	SCHRAUBE M10X1,5X25 U5739 8.8	TORNILLO M10X1,5X25 U5739 8.8
23	F01410062R	ROS.M10 10,5X 18X 2 U6592 ZN	WASHER M10 10,5X 18X 2 U6592	RONDELLE M10 10,5X18X2 ZN	DICHTUNGSRING M10 10,5X18X2 ZN	ARAND.M10 10,5X 18X 2 U6592 ZN
24	B01330957R	DISTANZIALE 35-48-7	SPACER	ENTRETOISE	DISTANZSTUECK 35X48X7	DISTANCIADOR 35-48-7
25	B03111046R	CATENA RULLI ASA 60-1 46 MGL	ROLLER CHAIN ASA60-1 46 MGL	CHAINE ROULEAUX	KETTE DER WALZEN	CADENA DE LOS RODILLOS ASA 60-
26	B03L34402R	INGR. DOPPIO Z=17 48 CON MOZZO	GEAR	ENGRANAGE	ZAHNRADPAAR Z=17 48	ENGR. DOBLE Z=17 48 CON BUJE
27	B01700035R	ANEL. D ARR. ALB. 35-E UNI3653	SEEGER RING	BAGUE SEEGER	SEEGERRING 35-E	ANIL. DE PARAD. RB. 35-E UNI3
28	B07VP0513R	TENDICATENA IN NYLON	NYLON CHAIN TIGHTENER	TENDEUR DE CHAINE EN NYLON		TENSOR DE CADENA DE NAILON
29	B0C003172R	ATTACCO TENDICATENA	CHAIN TIGHTENER COUPLING	ATTELAGE TENDEUR DE CHAINE	KETTENSPANNER BEFESTIGUNG	CONEXI N TENSOR DE CADENA
30	F01020160R	VITE M12X1,75X60 U5737 8.8ZN	SCR. M12X1,75X60 U5737 8.8ZN	VIS M12X1,75X60 U5737 8.8 ZN	SCHRA.M12X1,75X60 U5737 8.8 ZN	TORNILLO M12X1,75X60 U5737 8.
31	F01420120R	ROS.M12 13X36X2,5 U6593 ZN	WASHER M12 13X36X2,5 U6593 ZN	RONDELLE M12 13X36X2,5 ZN		ARAND.M12 13X36X2,5 U6593 ZN
32	B01523831R	RALLA 12 33 5	FIFTH WHEEL	BUTEE	UMBORDELUNG 12 33 5	RANGUA 12 33 5
33	B03111057R	CATENA RULLI ASA 60-1 57 MGL	ROLLER CHAIN	CHAINE ROULEAUX	KETTE ASA 60-1 57MGL ISO1	CADENA DE LOS RODILLOS ASA 60-
34	B03400271R	INGR.DOPPIO Z=16 22 CON MOZZO	DOUBLE GEAR Z=16 22 WITH HUB	ENGRANAGE	ZAHNRADPAAR	ENGR.DOBLE Z=16 22 CON BUJE
35	B01534416R	SPES. 35 43 1 ZINCATO	SHIM	ENTRETOISE	AUSGLEICHSCHEIBE 35X43X1	ESPES. 35 43 1 CINCADO
36	B07VP0513R	TENDICATENA IN NYLON	NYLON CHAIN TIGHTENER	TENDEUR DE CHAINE EN NYLON		TENSOR DE CADENA DE NAILON
37	B0C003172R	ATTACCO TENDICATENA	CHAIN TIGHTENER COUPLING	ATTELAGE TENDEUR DE CHAINE	KETTENSPANNER BEFESTIGUNG	CONEXI N TENSOR DE CADENA
38	F01020164R	VITE M12X1,75X70 U5737 8.8ZN	SCREW M12X1,75X70 U5737 8.8ZN	VIS M12X1,75X70 ZN	SCHR. M12X1,75X70 U5737 8.8 ZN	TORNILLO M12X1,75X70 U5737 8.
39	F01410076R	ROS.M12 13X 24X2,5 U6592 ZN	WASHER 12 13X 24X2,5 U6592 ZN	RONDEL. M12 13X24X2,5 U6592 ZN	SCHEIBE M12 13X24X2,5 U6592 ZN	ARAND.M12 13X 24X2,5 U6592 ZN
40	B01523831R	RALLA 12 33 5	FIFTH WHEEL	BUTEE	UMBORDELUNG 12 33 5	RANGUA 12 33 5
41	B07SP0002R	CARTER SX PU	PU LEFT GUARD	CARTER GAUCHE PU	CARTER LINKS PU	C RTER IZQ PU
42	F01020436R	VITE M8X1,25X20 U5739 8.8ZN	SCR. M8X1,25X20 U5739 8.8ZN	VIS M8X1,25X 20 U5739 8.8 ZN	SCHRAUBE M8X1,25X20U5739 8.8ZN	TORNILLO M8X1,25X20 U5739 8.8
43	B03500279R	CONTRALBERO CORTO PU 200	SHORT COUNTERSHAFT 200	CONTRE ARBRE COURT PU 200	KURZE VORGELEGEWELLE 200	CONTRA- RBOL CORTO PU 200
44	B01700040R	ANEL. D ARR. ALBERO 40-E UNI 3	SEEGER RING	BAGUE SEEGER	SEEGERRING 40-E	ANIL. DE PARAD. RBOL 40-E UNI
45	B01300126R	SPES. 40 48 1 ZINC.ST_013	SHIM	ENTRETOISE	DISTANZSTUECK 40 408 1	ESPES. 40 48 1 CINC.EST_013
46	B01534395R	RALLA 35.5X 62 X 3 ZINCATO	FIFTH WHEEL	BUTEE	SPEZIALSCHEIBE	RANGUA 35.5X 62 X 3 CINCADO
47	B01300607R	DISTANZIALE 35X42X35	SPACER	ENTRETOISE	DISTANZSTUECK 35X42X35	DISTANCIADOR 35X42X35
48	B02353035R	SUPP.FLANG.TONDO 35 LAMIERA	BEARING FLANGED SUPPORT D.35	SUPPORT FLANGE ROND 35 LAMES	FLANSCHLAGER	SOPORTE BRIDA REDONDO 35 CHA
49	F01020470R	VITE M10X1,5X20 U5739 8.8ZN	SCR. M10X1,5X20 U5739 8.8ZN	VIS M10X1,5X20 U5739 8.8 ZN	SCHRAUBE M10X1,5X20 U5739 ZN	TORNILLO M10X1,5X20 U5739 8
50	F01410062R	ROS.M10 10,5X 18X 2 U6592 ZN	WASHER M10 10,5X 18X 2 U6592	RONDELLE M10 10,5X18X2 ZN	DICHTUNGSRING M10 10,5X18X2 ZN	ARAND.M10 10,5X 18X 2 U6592 ZN
51	B030E1052R	CATENA RULLI ISO 16 B-1 52M	ROLLER CHAIN	CHAINE ROULEAUX	WALZENKETTE	CADENA DE LOS RODILLOS ISO 16
52	B03400241R	MOZZO DI SICUREZZA PICK-UP	SURETY HUB	MOYEU DE SURETE	SICHERHEIT NABE	BUJE DE SEGURIDAD PICK-UP
53	B07S01001R	MOZZO CALETTATO	SPLINED HUB	MOYEU	VERZAHNTE NABE	BUJE ENSAMBLADO
54	B02500001R	BRONZINA 50X56 L38	BUSHING 50X56 L38	COUSSINET	LAGERBUCHSE	COJINETE 50X56 L38
55	B00170845R	VITE ZINCATA M 8X45-10.9 U5737	ZN SCREW M 8X45-10.9 U5737	VIS	SCHRAUBE	TORNILLO CINCADO M 8X45-10.9 U
56	B00511057R	BUSSOLA DI TRANCIAMENTO	BUSHING	BAGUE	BUCHSE	CASQUILLO DE CIZALLADO
57	B008B0208R	DADO M 8X1,25 D980 8 ZN	NUT	ECROU	SELBSTSICHERNDE MUTTER M8 KL8	TUERCA M 8X1,25 D980 8

TAV_180

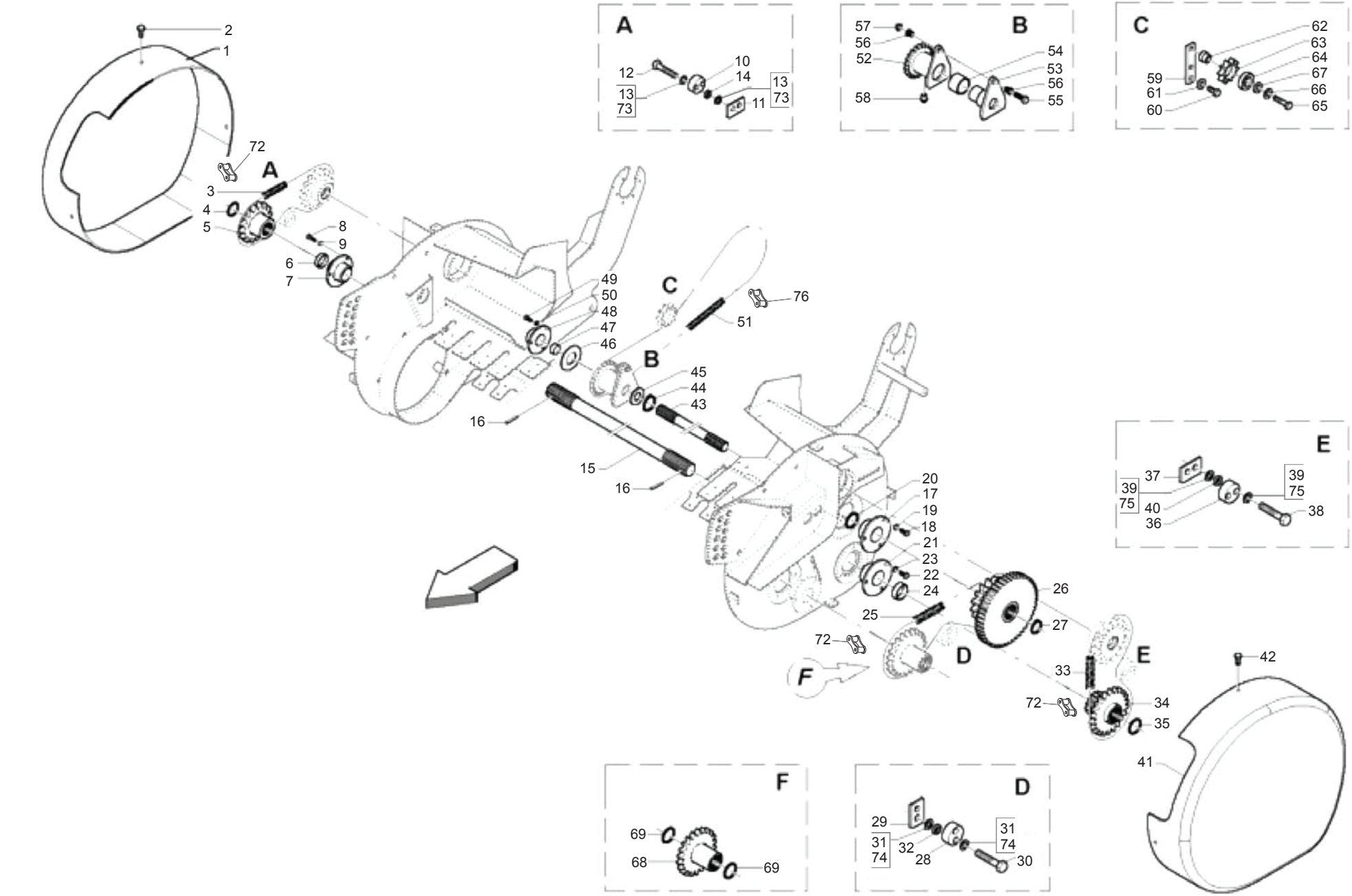

MASCHIO

cod. F07022338

TRASMISSIONE PICK-UP M CUT
PICK-UP M CUT TRANSMISSION

TAV_180

Pos.	Cod.	Descrizione	Description	Description	Benennung	Descripcion
58	B04200610R	INGRASS.A SFERE M6X1 LUNGO	GREASE NIPPLE	GRAISSEUR HYDRAULIQUE	GERADER SCHMIERNIPPEL M6X1	ENGRASADOR DE ESFERAS M6X1
59	B0C002390R	FERMO	LOCK	ARRET	ARRETIERUNG	TOPE
60	F01020510R	VITE M12X1,75X30 U5739 8.8ZN	SCR. M12X1,75X30 U5739 8.8ZN	VIS M12X1,75X30 U5739 8.8ZN	SCHRAU.M12X1,75X30 U5739 8.8ZN	TORNILLO M12X1,75X30 U5739
61	B01518412R	RALLA 12 38 5	FIFTH WHEEL	BUTEE	SCHEIBE	RANGUA 12 38 5
62	B01300302R	PERNO GALOPPINO	PIN	TOURILLON	BOLZEN FUER KETTENZAHNRAD	PERNO DE POLEA
63	B03400274R	CORONA Z10-1 ISO F52 TRATT	SPROCKET Z=10-1	ENGRANAGE SPECIAL TRAITE	ZAHNKRANZ Z=10-1	CORONA Z10-1 ISO F52 TRA
64	F04010170R	CUSC.D25 D52 B15 6205 2RS EX	BEARING D25 D52 B15 6205 2RS	ROULEMENT 6205 2RS	LAGER 6205 2RS	COJIN.D25 D52 B15 6205 2RS EX
65	F01020160R	VITE M12X1,75X60 U5737 8.8ZN	SCR. M12X1,75X60 U5737 8.8ZN	VIS M12X1,75X60 U5737 8.8 ZN	SCHRA.M12X1,75X60 U5737 8.8 ZN	TORNILLO M12X1,75X60 U5737 8.
66	F01420120R	ROS.M12 13X36X2,5 U6593 ZN	WASHER M12 13X36X2,5 U6593 ZN	RONDELLE M12 13X36X2,5 ZN		ARAND.M12 13X36X2,5 U6593 ZN
67	B01518412R	RALLA 12 38 5	FIFTH WHEEL	BUTEE	SCHEIBE	RANGUA 12 38 5
68	B03400240R	INGR. Z=22-3 4 ISO CON MOZZO	GEAR Z=22-3 4 ISO WITH HUB	ENGRENAGE	ZAHNRAD Z=22-3 4 ISO MIT NAB	ENGR. Z=22-3 4 ISO CON BUJE
69	B01300101R	SPES. 30,3 40 1 ZINCATO	SHIM GALV	ENTRETOISE GALV	DISTANZSTUECK 30,3 40 1	ESPES. 30,3 40 1 CINCADO
72	B03110007R	GIUNTO MOLL.N.26 ASA60-1	SPRING JOINT N. 26 ASA 60-1	JOINT	KETTENSCHLOSS	JUNTA DE MUELLE N. 26 ASA60-1
73	F01420120R	ROS.M12 13X36X2,5 U6593 ZN	WASHER M12 13X36X2,5 U6593 ZN	RONDELLE M12 13X36X2,5 ZN		ARAND.M12 13X36X2,5 U6593 ZN
74	F01410076R	ROS.M12 13X 24X2,5 U6592 ZN	WASHER 12 13X 24X2,5 U6592 ZN	RONDEL. M12 13X24X2,5 U6592 ZN	SCHEIBE M12 13X24X2,5 U6592 ZN	ARAND.M12 13X 24X2,5 U6592 ZN
75	F01420120R	ROS.M12 13X36X2,5 U6593 ZN	WASHER M12 13X36X2,5 U6593 ZN	RONDELLE M12 13X36X2,5 ZN		ARAND.M12 13X36X2,5 U6593 ZN
76	B030E0017R	GIUNTO MOLL N26 ISO 16 B-1	SPRING JOINT N.26 ISO 16 B-1	JOINT RESSORT	KETTENFEDER	JUNTA DE MUELL N26 ISO 16 B-1

TAV_185

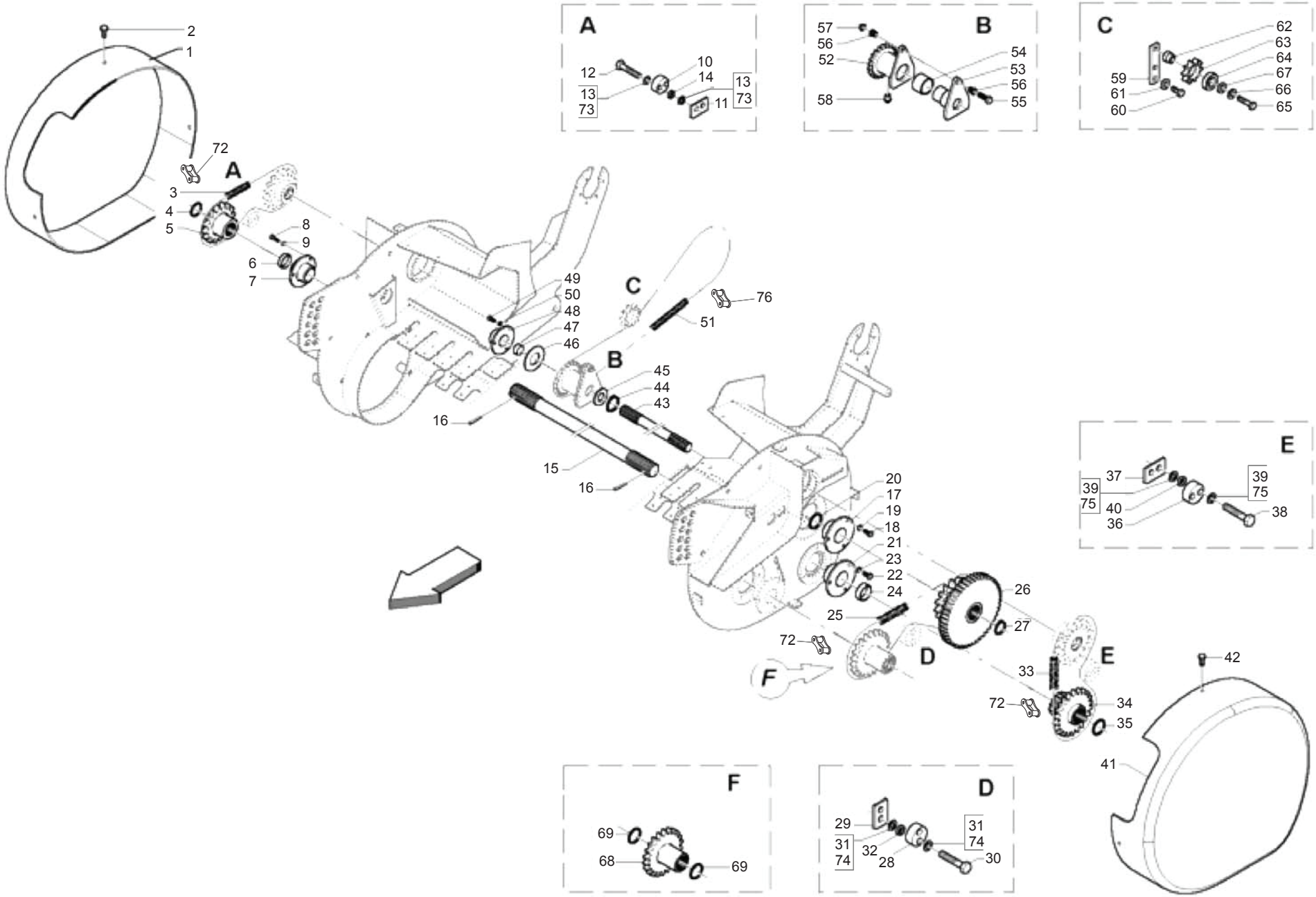

MASCHIO

cod. F07022338

TRASMISSIONE PICK-UP L CUT
PICK-UP L CUT TRANSMISSION

TAV_185

Pos.	Cod.	Descrizione	Description	Description	Benennung	Descripcion
1	B07SP0001R	CARTER DX PU	PU RIGHT GUARD	CARTER DROIT PU	CARTER RECHTS PU	C RTER DER PU
2	F01020436R	VITE M8X1,25X20 U5739 8.8ZN	SCR. M8X1,25X20 U5739 8.8ZN	VIS M8X1,25X 20 U5739 8.8 ZN	SCHRAUBE M8X1,25X20U5739 8.8ZN	TORNILLO M8X1,25X20 U5739 8.8
3	B03111057R	CATENA RULLI ASA 60-1 57 MGL	ROLLER CHAIN	CHAINE ROULEAUX	KETTE ASA 60-1 57MGL ISO1	CADENA DE LOS RODILLOS ASA 60-
4	B01534416R	SPES. 35 43 1 ZINCATO	SHIM	ENTRETOISE	AUSGLEICHSCHEIBE 35X43X1	ESPES. 35 43 1 CINCADO
5	B03400003R	INGR. Z=22; 3 4; ISO 12B-1	GEAR Z=22-3 4	ENGRANAGE	KETTENRAD Z=22-3 4	ENGR. Z=22; 3 4; ISO 12B-1 PU
6	B01330957R	DISTANZIALE 35-48-7	SPACER	ENTRETOISE	DISTANZSTUECK 35X48X7	DISTANCIADOR 35-48-7
7	B02353035R	SUPP.FLANG.TONDO 35 LAMIERA	BEARING FLANGED SUPPORT D.35	SUPPORT FLANGE ROND 35 LAMES	FLANSCHLAGER	SOPORTE BRIDA REDONDO 35 CHA
8	F01020472R	VITE M10X1,5X25 U5739 8.8ZN	SCR. M10X1,5X25 U5739 8.8ZN	VIS M10X1,5X25 U5739 8.8 ZN	SCHRAUBE M10X1,5X25 U5739 8.8	TORNILLO M10X1,5X25 U5739 8.8
9	F01410062R	ROS.M10 10,5X 18X 2 U6592 ZN	WASHER M10 10,5X 18X 2 U6592	RONDELLE M10 10,5X18X2 ZN	DICHTUNGSRING M10 10,5X18X2 ZN	ARAND.M10 10,5X 18X 2 U6592 ZN
10	B07VP0513R	TENDICATENA IN NYLON	NYLON CHAIN TIGHTENER	TENDEUR DE CHAINE EN NYLON		TENSOR DE CADENA DE NAILON
11	B0C003172R	ATTACCO TENDICATENA	CHAIN TIGHTENER COUPLING	ATTELAGE TENDEUR DE CHAINE	KETTENSPANNER BEFESTIGUNG	CONEXI N TENSOR DE CADENA
12	F01020164R	VITE M12X1,75X70 U5737 8.8ZN	SCREW M12X1,75X70 U5737 8.8ZN	VIS M12X1,75X70 ZN	SCHR. M12X1,75X70 U5737 8.8 ZN	TORNILLO M12X1,75X70 U5737 8.
13	F01410076R	ROS.M12 13X 24X2,5 U6592 ZN	WASHER 12 13X 24X2,5 U6592 ZN	RONDEL. M12 13X24X2,5 U6592 ZN	SCHEIBE M12 13X24X2,5 U6592 ZN	ARAND.M12 13X 24X2,5 U6592 ZN
14	B01523831R	RALLA 12 33 5	FIFTH WHEEL	BUTEE	UMBORDELUNG 12 33 5	RANGUA 12 33 5
15	B03500045R	CONTRALBERO LUNGO PU 220	COUNTERSHAFT 220	CONTRE-ARBRE 200	VORGELEGEWELLE	CONTRA- RBOL LARGO PU 220
16	F02100124R	SPINA E.P. 6X 50 U6873 C70 BR	PIN EL. 6X50 U6873 C70 BR	GOUJON 6X50 U6873 C70 BR	STIFT 6X50 U6873 C70 BR	CLAVIJA EL.P. 6X 50 U6873 C70
17	B02353035R	SUPP.FLANG.TONDO 35 LAMIERA	BEARING FLANGED SUPPORT D.35	SUPPORT FLANGE ROND 35 LAMES	FLANSCHLAGER	SOPORTE BRIDA REDONDO 35 CHA
18	F01020470R	VITE M10X1,5X20 U5739 8.8ZN	SCR. M10X1,5X20 U5739 8.8ZN	VIS M10X1,5X20 U5739 8.8 ZN	SCHRAUBE M10X1,5X20 U5739 ZN	TORNILLO M10X1,5X20 U5739 8
19	F01410062R	ROS.M10 10,5X 18X 2 U6592 ZN	WASHER M10 10,5X 18X 2 U6592	RONDELLE M10 10,5X18X2 ZN	DICHTUNGSRING M10 10,5X18X2 ZN	ARAND.M10 10,5X 18X 2 U6592 ZN
20	B01534416R	SPES. 35 43 1 ZINCATO	SHIM	ENTRETOISE	AUSGLEICHSCHEIBE 35X43X1	ESPES. 35 43 1 CINCADO
21	B02353035R	SUPP.FLANG.TONDO 35 LAMIERA	BEARING FLANGED SUPPORT D.35	SUPPORT FLANGE ROND 35 LAMES	FLANSCHLAGER	SOPORTE BRIDA REDONDO 35 CHA
22	F01020472R	VITE M10X1,5X25 U5739 8.8ZN	SCR. M10X1,5X25 U5739 8.8ZN	VIS M10X1,5X25 U5739 8.8 ZN	SCHRAUBE M10X1,5X25 U5739 8.8	TORNILLO M10X1,5X25 U5739 8.8
23	F01410062R	ROS.M10 10,5X 18X 2 U6592 ZN	WASHER M10 10,5X 18X 2 U6592	RONDELLE M10 10,5X18X2 ZN	DICHTUNGSRING M10 10,5X18X2 ZN	ARAND.M10 10,5X 18X 2 U6592 ZN
24	B01330957R	DISTANZIALE 35-48-7	SPACER	ENTRETOISE	DISTANZSTUECK 35X48X7	DISTANCIADOR 35-48-7
25	B03111046R	CATENA RULLI ASA 60-1 46 MGL	ROLLER CHAIN ASA60-1 46 MGL	CHAINE ROULEAUX	KETTE DER WALZEN	CADENA DE LOS RODILLOS ASA 60-
26	B03L34402R	INGR. DOPPIO Z=17 48 CON MOZZO	GEAR	ENGRANAGE	ZAHNRADPAAR Z=17 48	ENGR. DOBLE Z=17 48 CON BUJE
27	B01700035R	ANEL. D ARR. ALB. 35-E UNI3653	SEEGER RING	BAGUE SEEGER	SEEGERRING 35-E	ANIL. DE PARAD. RB. 35-E UNI3
28	B07VP0513R	TENDICATENA IN NYLON	NYLON CHAIN TIGHTENER	TENDEUR DE CHAINE EN NYLON		TENSOR DE CADENA DE NAILON
29	B0C003172R	ATTACCO TENDICATENA	CHAIN TIGHTENER COUPLING	ATTELAGE TENDEUR DE CHAINE	KETTENSPANNER BEFESTIGUNG	CONEXI N TENSOR DE CADENA
30	F01020160R	VITE M12X1,75X60 U5737 8.8ZN	SCR. M12X1,75X60 U5737 8.8ZN	VIS M12X1,75X60 U5737 8.8 ZN	SCHRA.M12X1,75X60 U5737 8.8 ZN	TORNILLO M12X1,75X60 U5737 8.
31	F01420120R	ROS.M12 13X36X2,5 U6593 ZN	WASHER M12 13X36X2,5 U6593 ZN	RONDELLE M12 13X36X2,5 ZN		ARAND.M12 13X36X2,5 U6593 ZN
32	B01523831R	RALLA 12 33 5	FIFTH WHEEL	BUTEE	UMBORDELUNG 12 33 5	RANGUA 12 33 5
33	B03111057R	CATENA RULLI ASA 60-1 57 MGL	ROLLER CHAIN	CHAINE ROULEAUX	KETTE ASA 60-1 57MGL ISO1	CADENA DE LOS RODILLOS ASA 60-
34	B03400271R	INGR.DOPPIO Z=16 22 CON MOZZO	DOUBLE GEAR Z=16 22 WITH HUB	ENGRANAGE	ZAHNRADPAAR	ENGR.DOBLE Z=16 22 CON BUJE
35	B01534416R	SPES. 35 43 1 ZINCATO	SHIM	ENTRETOISE	AUSGLEICHSCHEIBE 35X43X1	ESPES. 35 43 1 CINCADO
36	B07VP0513R	TENDICATENA IN NYLON	NYLON CHAIN TIGHTENER	TENDEUR DE CHAINE EN NYLON		TENSOR DE CADENA DE NAILON
37	B0C003172R	ATTACCO TENDICATENA	CHAIN TIGHTENER COUPLING	ATTELAGE TENDEUR DE CHAINE	KETTENSPANNER BEFESTIGUNG	CONEXI N TENSOR DE CADENA
38	F01020164R	VITE M12X1,75X70 U5737 8.8ZN	SCREW M12X1,75X70 U5737 8.8ZN	VIS M12X1,75X70 ZN	SCHR. M12X1,75X70 U5737 8.8 ZN	TORNILLO M12X1,75X70 U5737 8.
39	F01420120R	ROS.M12 13X36X2,5 U6593 ZN	WASHER M12 13X36X2,5 U6593 ZN	RONDELLE M12 13X36X2,5 ZN		ARAND.M12 13X36X2,5 U6593 ZN
40	B01523831R	RALLA 12 33 5	FIFTH WHEEL	BUTEE	UMBORDELUNG 12 33 5	RANGUA 12 33 5
41	B07SP0002R	CARTER SX PU	PU LEFT GUARD	CARTER GAUCHE PU	CARTER LINKS PU	C RTER IZQ PU
42	F01020436R	VITE M8X1,25X20 U5739 8.8ZN	SCR. M8X1,25X20 U5739 8.8ZN	VIS M8X1,25X 20 U5739 8.8 ZN	SCHRAUBE M8X1,25X20U5739 8.8ZN	TORNILLO M8X1,25X20 U5739 8.8
43	B03500280R	CONTRALBERO CORTO PU 220	SHORT COUNTER SHAFT 220	CONTRE ARBRE COURT PU 220	KURZE VORGELEGEWELLE 220	CONTRA- RBOL CORTO PU 220
44	B01700040R	ANEL. D ARR. ALBERO 40-E UNI 3	SEEGER RING	BAGUE SEEGER	SEEGERRING 40-E	ANIL. DE PARAD. RBOL 40-E UNI
45	B01300126R	SPES. 40 48 1 ZINC.ST_013	SHIM	ENTRETOISE	DISTANZSTUECK 40 408 1	ESPES. 40 48 1 CINC.EST_013
46	B01534395R	RALLA 35.5X 62 X 3 ZINCATO	FIFTH WHEEL	BUTEE	SPEZIALSCHEIBE	RANGUA 35.5X 62 X 3 CINCADO
47	B01300607R	DISTANZIALE 35X42X35	SPACER	ENTRETOISE	DISTANZSTUECK 35X42X35	DISTANCIADOR 35X42X35
48	B02353035R	SUPP.FLANG.TONDO 35 LAMIERA	BEARING FLANGED SUPPORT D.35	SUPPORT FLANGE ROND 35 LAMES	FLANSCHLAGER	SOPORTE BRIDA REDONDO 35 CHA
49	F01020470R	VITE M10X1,5X20 U5739 8.8ZN	SCR. M10X1,5X20 U5739 8.8ZN	VIS M10X1,5X20 U5739 8.8 ZN	SCHRAUBE M10X1,5X20 U5739 ZN	TORNILLO M10X1,5X20 U5739 8
50	F01410062R	ROS.M10 10,5X 18X 2 U6592 ZN	WASHER M10 10,5X 18X 2 U6592	RONDELLE M10 10,5X18X2 ZN	DICHTUNGSRING M10 10,5X18X2 ZN	ARAND.M10 10,5X 18X 2 U6592 ZN
51	B030E1052R	CATENA RULLI ISO 16 B-1 52M	ROLLER CHAIN	CHAINE ROULEAUX	WALZENKETTE	CADENA DE LOS RODILLOS ISO 16
52	B03400241R	MOZZO DI SICUREZZA PICK-UP	SURETY HUB	MOYEU DE SURETE	SICHERHEIT NABE	BUJE DE SEGURIDAD PICK-UP
53	B07S01001R	MOZZO CALETTATO	SPLINED HUB	MOYEU	VERZAHNTE NABE	BUJE ENSAMBLADO
54	B02500001R	BRONZINA 50X56 L38	BUSHING 50X56 L38	COUSSINET	LAGERBUCHSE	COJINETE 50X56 L38
55	B00170845R	VITE ZINCATA M 8X45-10.9 U5737	ZN SCREW M 8X45-10.9 U5737	VIS	SCHRAUBE	TORNILLO CINCADO M 8X45-10.9 U
56	B00511057R	BUSSOLA DI TRANCIAMENTO	BUSHING	BAGUE	BUCHSE	CASQUILLO DE CIZALLADO
57	B008B0208R	DADO M 8X1,25 D980 8 ZN	NUT	ECROU	SELBSTSICHERNDE MUTTER M8 KL8	TUERCA M 8X1,25 D980 8

TAV_185

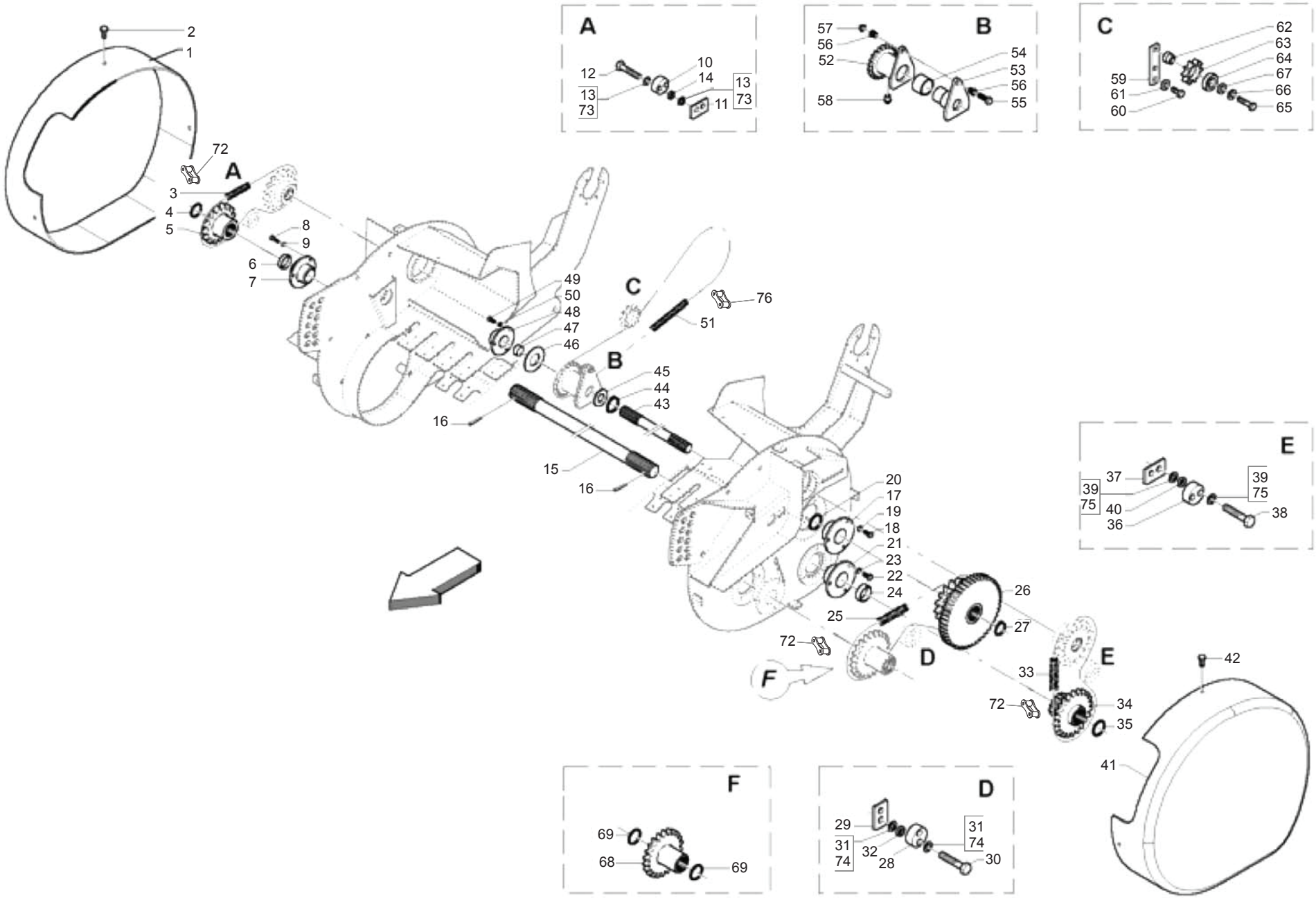

MASCHIO

cod. F07022338

TRASMISSIONE PICK-UP L CUT
PICK-UP L CUT TRANSMISSION

Pos.	Cod.	Descrizione	Description	Description	Benennung	Descripcion
58	B04200610R	INGRASS.A SFERE M6X1 LUNGO	GREASE NIPPLE	GRAISSEUR HYDRAULIQUE	GERADER SCHMIERNIPPEL M6X1	ENGRASADOR DE ESFERAS M6X1
59	B0C002390R	FERMO	LOCK	ARRET	ARRETIERUNG	TOPE
60	F01020510R	VITE M12X1,75X30 U5739 8.8ZN	SCR. M12X1,75X30 U5739 8.8ZN	VIS M12X1,75X30 U5739 8.8ZN	SCHRAU.M12X1,75X30 U5739 8.8ZN	TORNILLO M12X1,75X30 U5739
61	B01518412R	RALLA 12 38 5	FIFTH WHEEL	BUTEE	SCHEIBE	RANGUA 12 38 5
62	B01300302R	PERNO GALOPPINO	PIN	TOURILLON	BOLZEN FUER KETTENZAHNRAD	PERNO DE POLEA
63	B03400274R	CORONA Z10-1 ISO F52 TRATT	SPROCKET Z=10-1	ENGRANAGE SPECIAL TRAITE	ZAHNKRANZ Z=10-1	CORONA Z10-1 ISO F52 TRA
64	F04010170R	CUSC.D25 D52 B15 6205 2RS EX	BEARING D25 D52 B15 6205 2RS	ROULEMENT 6205 2RS	LAGER 6205 2RS	COJIN.D25 D52 B15 6205 2RS EX
65	F01020160R	VITE M12X1,75X60 U5737 8.8ZN	SCR. M12X1,75X60 U5737 8.8ZN	VIS M12X1,75X60 U5737 8.8 ZN	SCHRA.M12X1,75X60 U5737 8.8 ZN	TORNILLO M12X1,75X60 U5737 8.
66	F01420120R	ROS.M12 13X36X2,5 U6593 ZN	WASHER M12 13X36X2,5 U6593 ZN	RONDELLE M12 13X36X2,5 ZN		ARAND.M12 13X36X2,5 U6593 ZN
67	B01518412R	RALLA 12 38 5	FIFTH WHEEL	BUTEE	SCHEIBE	RANGUA 12 38 5
68	B03400075R	INGRANAGGIO Z=22 3 4 CON MOZZO	GEAR Z=22-3 4 WITH HUB	ENGRENAGE	ZAHNRAD	ENGRANAJE Z22-3 4 CON BUJE
69	B01534416R	SPES. 35 43 1 ZINCATO	SHIM	ENTRETOISE	AUSGLEICHSCHEIBE 35X43X1	ESPES. 35 43 1 CINCADO
72	B03110007R	GIUNTO MOLL.N.26 ASA60-1	SPRING JOINT N. 26 ASA 60-1	JOINT	KETTENSCHLOSS	JUNTA DE MUELLE N. 26 ASA60-1
73	F01420120R	ROS.M12 13X36X2,5 U6593 ZN	WASHER M12 13X36X2,5 U6593 ZN	RONDELLE M12 13X36X2,5 ZN		ARAND.M12 13X36X2,5 U6593 ZN
74	F01410076R	ROS.M12 13X 24X2,5 U6592 ZN	WASHER 12 13X 24X2,5 U6592 ZN	RONDEL. M12 13X24X2,5 U6592 ZN	SCHEIBE M12 13X24X2,5 U6592 ZN	ARAND.M12 13X 24X2,5 U6592 ZN
75	F01410076R	ROS.M12 13X 24X2,5 U6592 ZN	WASHER 12 13X 24X2,5 U6592 ZN	RONDEL. M12 13X24X2,5 U6592 ZN	SCHEIBE M12 13X24X2,5 U6592 ZN	ARAND.M12 13X 24X2,5 U6592 ZN
76	B030E0017R	GIUNTO MOLL N26 ISO 16 B-1	SPRING JOINT N.26 ISO 16 B-1	JOINT RESSORT	KETTENFEDER	JUNTA DE MUELL N26 ISO 16 B-1

TAV_190

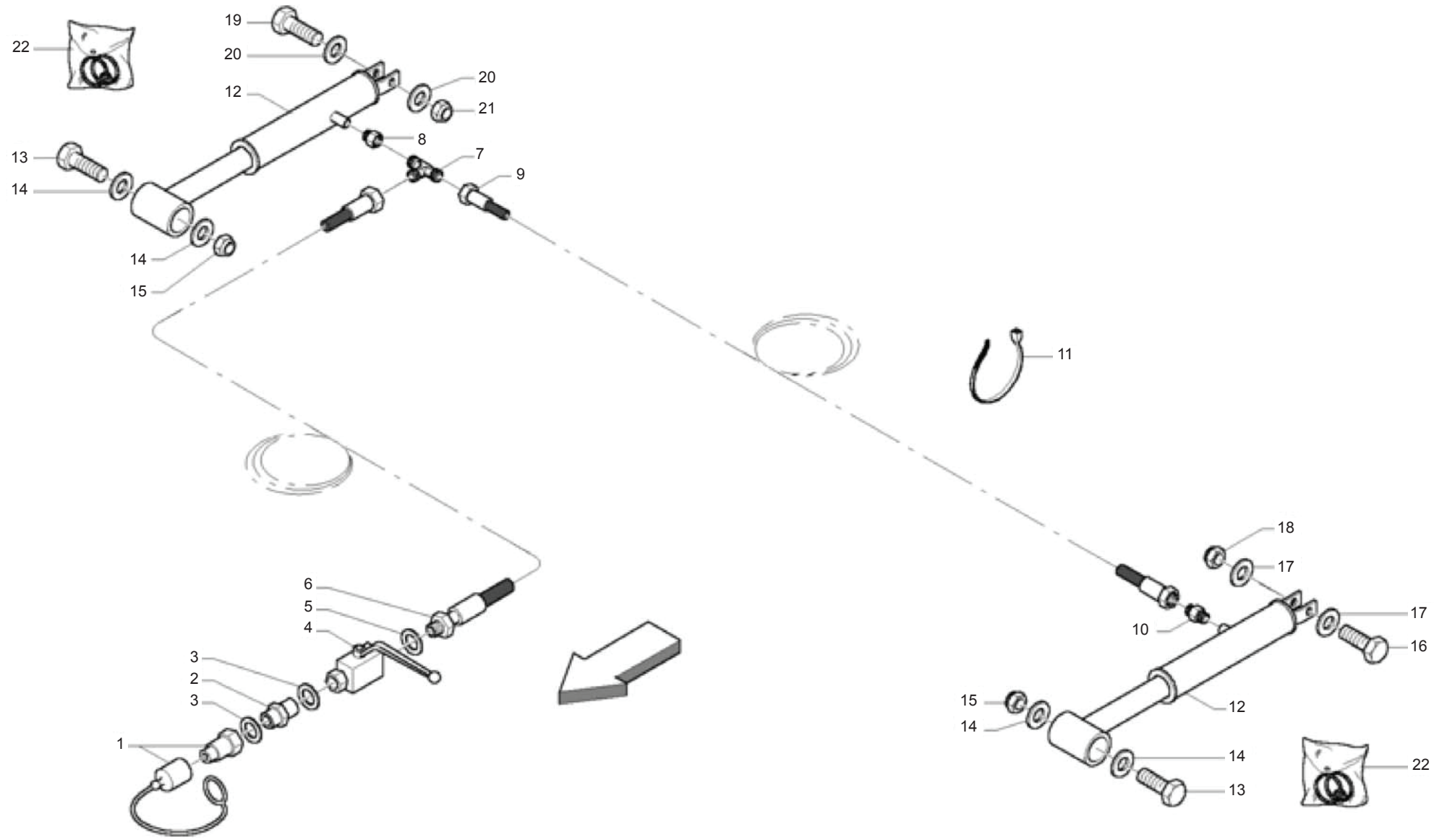
22
19
20
12
20
21
8
13
7
14
9
14
15
11
18
17
6
5
4
17
10
16
3
2
3
15
12
1
14
14
22
13

IMPIANTO IDRAULICO PICK-UP
PICK-UP HYDRAULIC SYSTEM

TAV_190

Pos.	Cod.	Descrizione	Description	Description	Benennung	Descripcion
1	B0H6000A0R	INNESTO RAP.NV 12GAS-M	QUICK CLUTCH	EMBRAYAGE	SCHNELLKUPPLUNG	ACOPLAMIENTO R P.NV 12GAS-M
2	B0H733671R	NIPPLO RID.FORO 1MM. 1 2 -1 4	NIPPLE 1 2 -1 4	NIPPLE 1 MM 1 2 -1 4	NIPPEL 1 2 -1 4	NIPLE RED. ORIFICIO 1MM. 1 2 -
3	B01441415R	RONDELLA IN RAME 1 4	WASHER	RONDELLE	BEILAGSCHEIBE 1 4 13X19X1,5	ARANDELA DE COBRE 1 4
4	B0H000119R	RUBIN. A SFER.A.P.1 4 FEMM.-F	BALL COCK	ROBINET 1 4 FEMELLE	KUGELHAHN	GRIFO DE ESFERA A.P.1 4 HEM.-
5	B01442015R	ROS. 21 X27X1,5 RAME -1 2	WASHER	RONDELLE	BEILAGSCHEIBE 1 2	ARAND.21 X27X1,5 COBRE -1 2
6	B0H000250R	TUBO IDRAUL.	HYDRAULIC HOSE	TUYAU HYDRAULIQUE	HYDRAULIKSCHLAUCH	TUBO HIDR UL.
7	B0H000098R	RACCORDO T 10 TN 127-10LR	UNION T 10	RACCORD T 10	T.VERSCHRAUBUNG	RACOR EN T 10 TN 127-10LR
8	B0H000265R	RID. RASTELLI TN143-3 8 X1 4 R	REDUCTION TN143-3 8 X1 4 R	REDUCTION TN 143-3 8 X1 4 R	REDUKTION TN 143-3 8	RED. RASTELLI TN143-3 8 X1 4 R
9	B0H000251R	TUBO IDRAUL.	HYDRAULIC HOSE	TUYAU HYDRAULIQUE	HYDRAULIKSCHLAUCH	TUBO HIDR UL.
10	B0H000139R	RACCORDO I 10 RASTELLI	UNION I 10	RACCORD I SEULEMENT CORPS	VERBINDUNGSTUECK I 10	RACOR I 10 RASTELLI
11	F05150055R	FASCETTA POLYA. 3,6X200 NERA	WHITE BAND	BANDE BIANCHE	WEIBE BAND	BANDA POLYA. 3,6X200 NEGRA
12	B0H400062R	MARTINETTO PICK-UP	SPRINTER PICK-UP JACK	VERIN PICK-UP SPRINTER	SPRINTER PICK-UP ZYLINDER	CILINDRO PICK-UP
13	F01020976R	VITE M16X 2X55 U5737 8.8 ZN	SCREW M16X 2X55 U5737 8.8 ZN			TORNILLO M16X 2X55 U5737 8.8 Z
14	F01410100R	ROS.M16 17X 30X 3 U6592 ZN	WASHER M16 17X30X3 U6592 ZN	RONDELLE M16 17X30X3 ZN	SCHRAUBE M16 17X 30X3 U6592 ZN	ARAND.M16 17X 30X 3 U6592 ZN
15	B00920516R	DADO M16X 1,5 D985 6S ZN	NUT M16X1,5 D985 6S ZN	ECROU	SELBSTSICHERNDE MUTTER M16-5S	TUERCA M16X 1,5 D985 6S
16	F01020264R	VITE M16X2X90 U5737 8.8ZN	SCR. M16X2X90 U5737 8.8ZN	VIS M16X2X90 5737 8.8 ZN	SCHRAUBE M16X2X90 5737 8.8 ZN	TORNILLO M16X2X90 U5737 8.8Z
17	F01410100R	ROS.M16 17X 30X 3 U6592 ZN	WASHER M16 17X30X3 U6592 ZN	RONDELLE M16 17X30X3 ZN	SCHRAUBE M16 17X 30X3 U6592 ZN	ARAND.M16 17X 30X 3 U6592 ZN
18	B00920516R	DADO M16X 1,5 D985 6S ZN	NUT M16X1,5 D985 6S ZN	ECROU	SELBSTSICHERNDE MUTTER M16-5S	TUERCA M16X 1,5 D985 6S
19	B00191680R	VITE M16X 2X 80 U5737 8.8ZN	SCREW	VIS	SCHRAUBE	TORNILLO M16X 2X 80 U5737 8
20	F01410100R	ROS.M16 17X 30X 3 U6592 ZN	WASHER M16 17X30X3 U6592 ZN	RONDELLE M16 17X30X3 ZN	SCHRAUBE M16 17X 30X3 U6592 ZN	ARAND.M16 17X 30X 3 U6592 ZN
21	B00920516R	DADO M16X 1,5 D985 6S ZN	NUT M16X1,5 D985 6S ZN	ECROU	SELBSTSICHERNDE MUTTER M16-5S	TUERCA M16X 1,5 D985 6S
22	B0H400061R	KIT GUARNIZ. MARTIN. PICK_UP	KIT JOINTS	KIT JOINTS POUR VERIN	DICHTUNGSSATZ	KIT JUNTAS CILINDRO PICK_UP

TAV_195

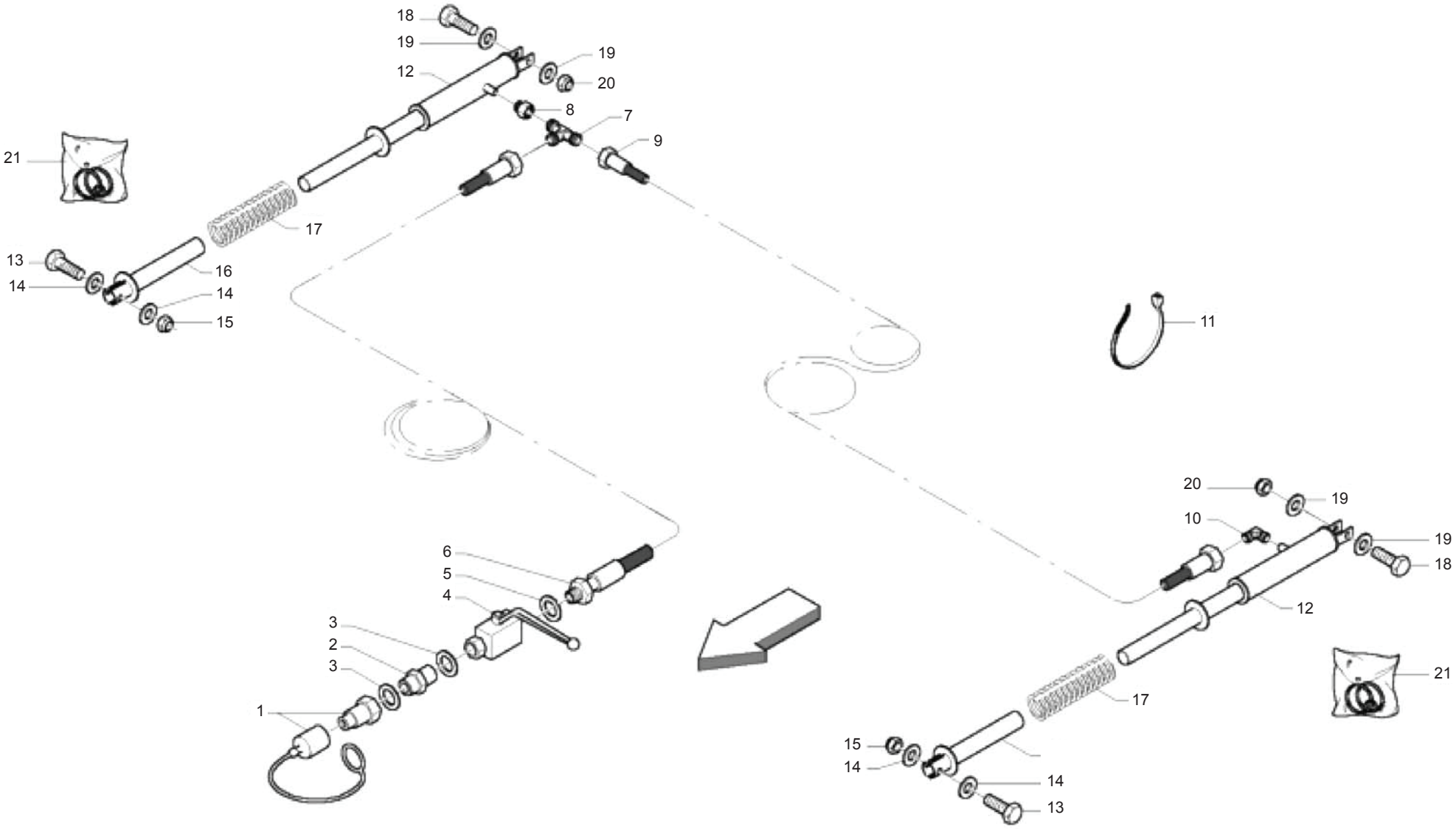

MASCHIO

cod. F07022338

IMPIANTO IDRAULICO PICK-UP CUT
PICK-UP CUT HYDRAULIC TRANSMISSION

TAV_195

Pos.	Cod.	Descrizione	Description	Description	Benennung	Descripcion
1	B0H6000A0R	INNESTO RAP.NV 12GAS-M	QUICK CLUTCH	EMBRAYAGE	SCHNELLKUPPLUNG	ACOPLAMIENTO R P.NV 12GAS-M
2	B0H733671R	NIPPLO RID.FORO 1MM. 1 2 -1 4	NIPPLE 1 2 -1 4	NIPPLE 1 MM 1 2 -1 4	NIPPEL 1 2 -1 4	NIPLE RED. ORIFICIO 1MM. 1 2 -
3	B01441415R	RONDELLA IN RAME 1 4	WASHER	RONDELLE	BEILAGSCHEIBE 1 4 13X19X1,5	ARANDELA DE COBRE 1 4
4	B0H000119R	RUBIN. A SFER.A.P.1 4 FEMM.-F	BALL COCK	ROBINET 1 4 FEMELLE	KUGELHAHN	GRIFO DE ESFERA A.P.1 4 HEM.-
5	B01442015R	ROS. 21 X27X1,5 RAME -1 2	WASHER	RONDELLE	BEILAGSCHEIBE 1 2	ARAND.21 X27X1,5 COBRE -1 2
6	B0H000250R	TUBO IDRAUL.	HYDRAULIC HOSE	TUYAU HYDRAULIQUE	HYDRAULIKSCHLAUCH	TUBO HIDR UL.
7	B0H000264R	RACCORDO T 10 TN96-10LR	T FITTING TN96-10LR	RACCORD T 10	KUPPLUNG T 10	RACOR EN T 10 TN96-10LR
8	B0H000265R	RID. RASTELLI TN143-3 8 X1 4 R	REDUCTION TN143-3 8 X1 4 R	REDUCTION TN 143-3 8 X1 4 R	REDUKTION TN 143-3 8	RED. RASTELLI TN143-3 8 X1 4 R
9	B0H000251R	TUBO IDRAUL.	HYDRAULIC HOSE	TUYAU HYDRAULIQUE	HYDRAULIKSCHLAUCH	TUBO HIDR UL.
10	B0H000086R	RACCORDO L 10 TN94-10LR	UNION L 10	RACCORD L 10	ANSCHLUSSSTUECK L 10	RACOR L 10 TN94-10LR
11	F05150055R	FASCETTA POLYA. 3,6X200 NERA	WHITE BAND	BANDE BIANCHE	WEIBE BAND	BANDA POLYA. 3,6X200 NEGRA
12	B0H400072R	MARTINETTO PICK-UP	SPRINTER PICK-UP JACK CUT	VERIN PICK-UP	SPRINTER PICK-UP ZYLINDER CUT	CILINDRO PICK-UP
13	F01020256R	VITE M16X2X60 U5737 8.8ZN	SCR. M16X2X60 U5737 8.8ZN	VIS M16X 2X60 U5737 8.8 ZN	SCHRAUBE M16X2X60 U5737 8.8 ZN	TORNILLO M16X2X60 U5737 8.8Z
14	F01410100R	ROS.M16 17X 30X 3 U6592 ZN	WASHER M16 17X30X3 U6592 ZN	RONDELLE M16 17X30X3 ZN	SCHRAUBE M16 17X 30X3 U6592 ZN	ARAND.M16 17X 30X 3 U6592 ZN
15	B00920516R	DADO M16X 1,5 D985 6S ZN	NUT M16X1,5 D985 6S ZN	ECROU	SELBSTSICHERNDE MUTTER M16-5S	TUERCA M16X 1,5 D985 6S
16	B07S01072R	GUIDA MARTINETTO	JACK GUIDE	GUIDE VERIN	ZYLINDERFUEHRUNG	GU A DEL CILINDRO
17	B01800062R	MOLLA PU TOPCUT	TOPCUT PICK-UP TINE	DENT PICK UP TOPCUT	TOPCUT PICK-UP FEDERZINKEN	MUELLE PU TOPCUT
18	F01020256R	VITE M16X2X60 U5737 8.8ZN	SCR. M16X2X60 U5737 8.8ZN	VIS M16X 2X60 U5737 8.8 ZN	SCHRAUBE M16X2X60 U5737 8.8 ZN	TORNILLO M16X2X60 U5737 8.8Z
19	F01410100R	ROS.M16 17X 30X 3 U6592 ZN	WASHER M16 17X30X3 U6592 ZN	RONDELLE M16 17X30X3 ZN	SCHRAUBE M16 17X 30X3 U6592 ZN	ARAND.M16 17X 30X 3 U6592 ZN
20	B00920516R	DADO M16X 1,5 D985 6S ZN	NUT M16X1,5 D985 6S ZN	ECROU	SELBSTSICHERNDE MUTTER M16-5S	TUERCA M16X 1,5 D985 6S
21	B0H400061R	KIT GUARNIZ. MARTIN. PICK_UP	KIT JOINTS	KIT JOINTS POUR VERIN	DICHTUNGSSATZ	KIT JUNTAS CILINDRO PICK_UP

TAV_200

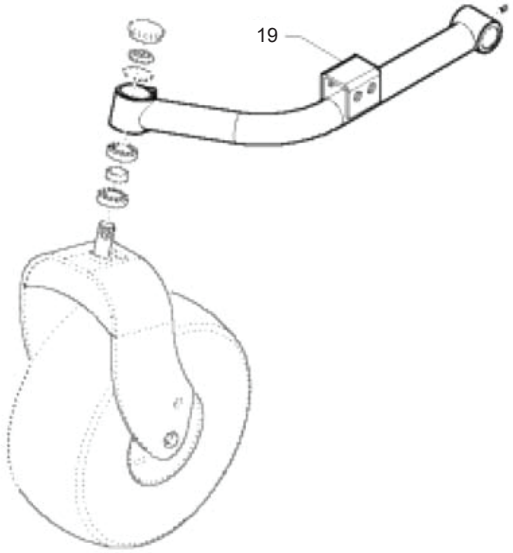

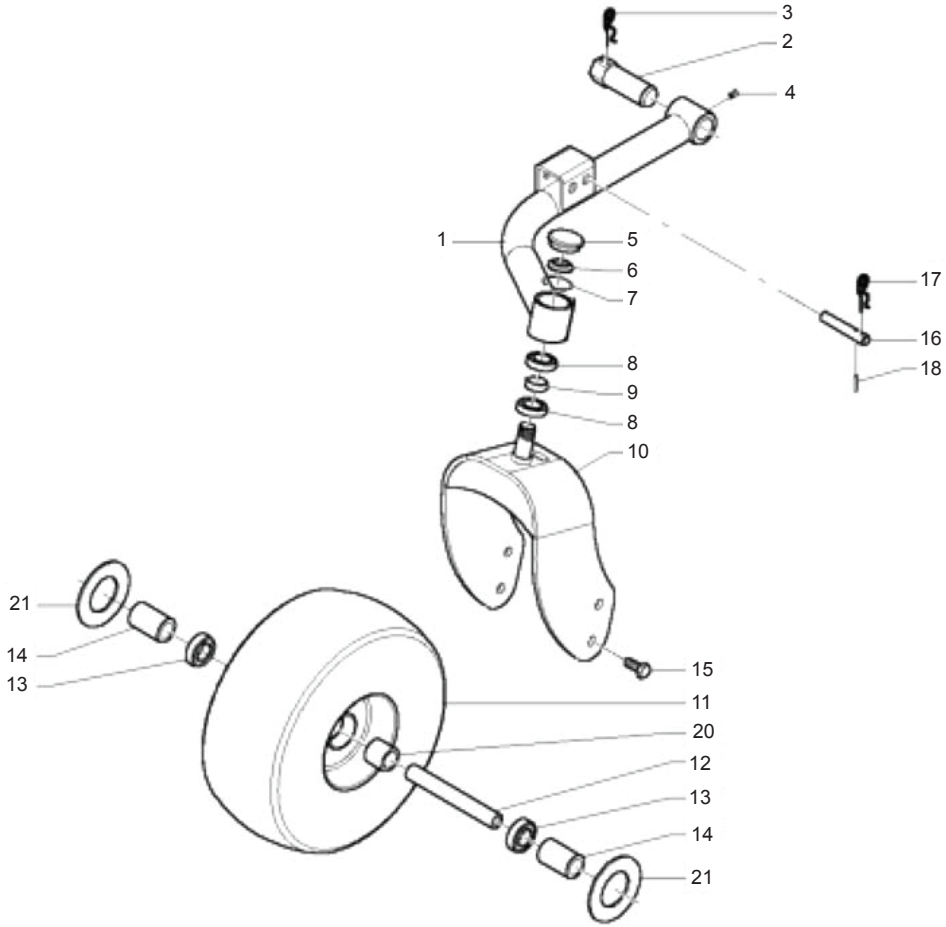

RUOTE PICK-UP M
PICK-UP M WHEELS

TAV_200

Pos.	Cod.	Descrizione	Description	Description	Benennung	Descripcion
1	B07S01559R	BRACCIO RUOTA SX PU 200	LEFT PICK-UP WHEEL ARM 200	BRAS ROUE GAUCHE PU 200	LINKER PICK-UP RADTRAEGERARM 2	BRAZO DE LA RUEDA IZQ PU 200
2	B00500079R	SPINA BRACCI RUOTE	WHEEL ARM PIN	AXE BRAS ROUES	RADTRAEGERBOLZEN	CLAVIJA BRAZOS DE LAS RUEDAS
3	B011B0499R	SPINA A MOLLA A DOPPIO GIRO 4	PIN	GOUPILLE CLIPS	ZAPFEN	CLAVIJA DE MUELLE CON DOBLE G
4	F01100013R	ING.M 6X1 7663-C 9SMNPB28 ZN	SPHERE NIPPLE M6X1 90	GRAISSEUR A BILLES M6X1 90	KUGELFETTBSCHSE M6X1 90	ENG.M 6X1 7663-C 9SMNPB28 ZN
5	B04400002R	CAP. CHIUSO 47X 8 TIPO C	CAP	COUVERCLE	SCHLIESSKAPPE	CAP. CERRADO 47X 8 TIPO C
6	B00941325R	GHIERA AU.GUK M25X1,5 T.4H ZN	RING NUT	RONDELLE	GEWINDERING M25X1,5	ABRAZADERA AU.GUK M25X1,5 T.4
7	B01710047R	ANEL. D ARR. FORO 47-I UNI3654	SEEGER RING	BAGUE SEEGER	SEEGERRING 47-I	ANIL. DE PARAD. ORIFICIO 47-I
8	B02042512R	CUSC 6005-2RS CAT.B-ST004	BEARING	ROULEMENT	LAGER	COJIN.6005-2RS CAT.B-ST004
9	B01300934R	DISTANZIALE 25,5X33,7X12	SPACER	ENTRETOISE	DISTANZSTUCK 25,5X33,7X12	DISTANCIADOR 25,5X33,7X12
10	B07S01557R	SUPP. RUOTA	WHEEL SUPPORT	SUPPORT ROUE	RADHALTERUNG	SOP. RUEDA
11	B07100045R	RUOTA IN GOMMA 16.650 X 8	RUBBER WHEEL	ROUE EN CAOUTCHOUC	GUMMIRAD	RUEDA DE GOMA 16.650 X 8
12	B01300336R	FUSELLO RUOTE PU	PICK-UP WHEELS SPINDLE	FUSEAU ROUES PU	ACHSCHENKEL R DER PICK-UP	PIVOTE DE LAS RUEDAS PU
13	B02040005R	CUSCINETTO 6205-2RS CAT.BST004	BEARING	ROULEMENT	LAGER	COJINETE 6205-2RS CAT.BST004
14	B01301058R	DISTANZIALE 26X33.7X61.5	SPACER	ENTRETOISE	DISTANSCHEIBE 26X33.7X61.5	DISTANCIADOR 26X33.7X61.5
15	F01020562R	VITE M16X2X30 U5739 8.8ZN	SCR. M16X2X30 U5739 8.8ZN	VIS M16X2X30 U5739 8.8 ZN	SCHRAUBE M16X2X30 U5739 8.8 ZN	TORNILLO M16X2X30 U5739 8.8ZN
16	B01301065R	SPINA 16X95 2F 5	PIN	GOUPILLE	STECKSTIFT 16X95	CLAVIJA 16X95 2F 5
17	B011B0499R	SPINA A MOLLA A DOPPIO GIRO 4	PIN	GOUPILLE CLIPS	ZAPFEN	CLAVIJA DE MUELLE CON DOBLE G
18	F02100086R	SPINA E.P. 5X 30 U6873 C70 ZN	PIN EL. 5 X30 DIN 1481 GALVAN.	FICHE EL. 5 X30 DIN 1481 ZN	SPANNSTIFT 5 X30 DIN 1481 ZN	CLAVIJA EL.P. 5X 30 U6873 C70
19	B07S01555R	BRACCIO RUOTA DX PU 200	RIGHT PICK-UP WHEEL ARM 200	BRAS ROUE DROIT PU 200	RECHTER PICK-UP RADTRAEGERARM	BRAZO DE LA RUEDA DER PU 200
20	B01300919R	DISTANZIALE 26X33.7X35.2	SPACER	ENTRETOISE	ABSTANDSTUECK 26X33.7X35.2	DISTANCIADOR 26X33.7X35.2
21	B01300918R	FLANGIA PARAFIENO FORO 25	DIAM. 25 HOLE FLANGE	BRIDE TROU DIAM. 25	FLANSCH 25	BRIDA MEDIDOR-HENO ORIFICIO 25

TAV_205

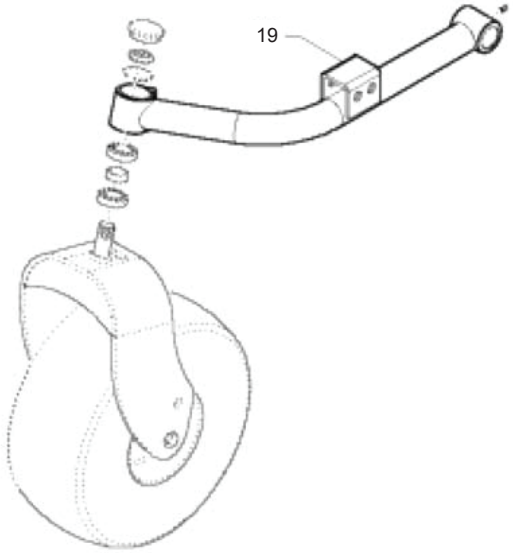

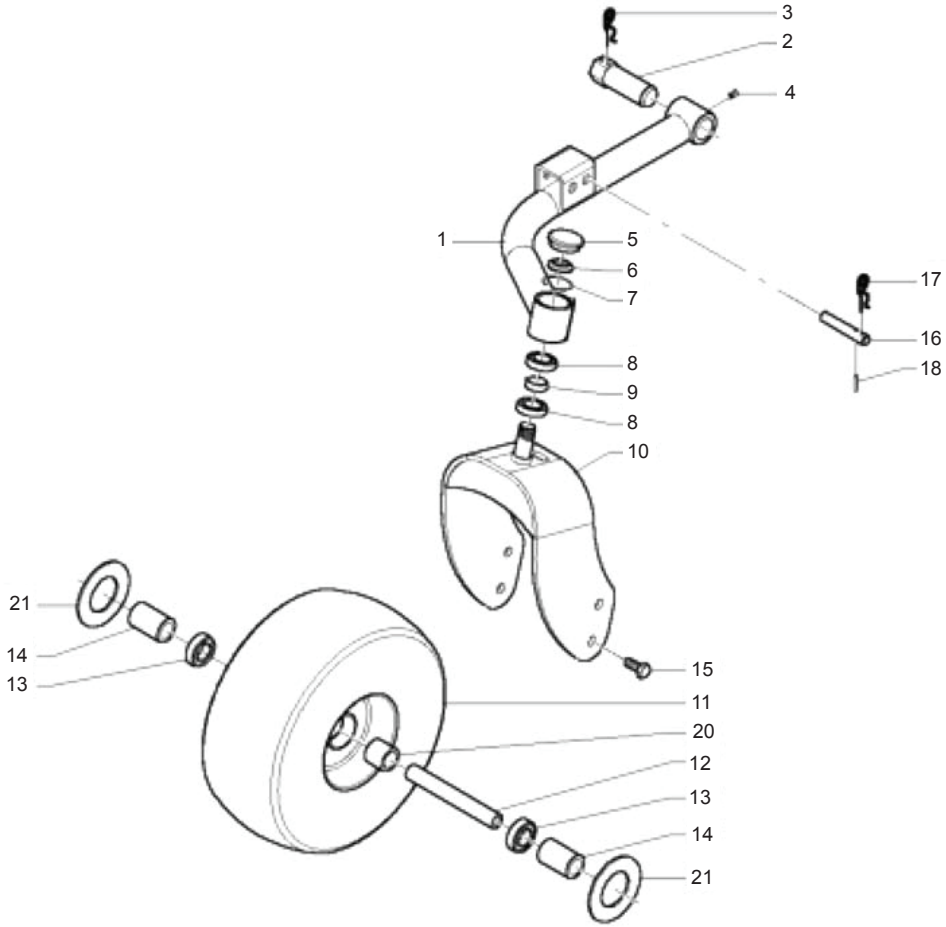

RUOTE PICK-UP L
PICK-UP L WHEELS

TAV_205

Pos.	Cod.	Descrizione	Description	Description	Benennung	Descripcion
1	B07S01807R	BRACCIO RUOTA SX PU 220	LEFT PICK-UP WHEEL ARM	BRAS ROUE GAUCHE PU 220	LINKER PICK-UP RADTRAGERARM	BRAZO DE LA RUEDA IZQ PU 220
2	B00500079R	SPINA BRACCI RUOTE	WHEEL ARM PIN	AXE BRAS ROUES	RADTRAEGERBOLZEN	CLAVIJA BRAZOS DE LAS RUEDAS
3	B011B0499R	SPINA A MOLLA A DOPPIO GIRO 4	PIN	GOUPILLE CLIPS	ZAPFEN	CLAVIJA DE MUELLE CON DOBLE G
4	F01100013R	ING.M 6X1 7663-C 9SMNPB28 ZN	SPHERE NIPPLE M6X1 90	GRAISSEUR A BILLES M6X1 90	KUGELFETTBSCHSE M6X1 90	ENG.M 6X1 7663-C 9SMNPB28 ZN
5	B04400002R	CAP. CHIUSO 47X 8 TIPO C	CAP	COUVERCLE	SCHLIESSKAPPE	CAP. CERRADO 47X 8 TIPO C
6	B00941325R	GHIERA AU.GUK M25X1,5 T.4H ZN	RING NUT	RONDELLE	GEWINDERING M25X1,5	ABRAZADERA AU.GUK M25X1,5 T.4
7	B01710047R	ANEL. D ARR. FORO 47-I UNI3654	SEEGER RING	BAGUE SEEGER	SEEGERRING 47-I	ANIL. DE PARAD. ORIFICIO 47-I
8	B02042512R	CUSC 6005-2RS CAT.B-ST004	BEARING	ROULEMENT	LAGER	COJIN.6005-2RS CAT.B-ST004
9	B01300934R	DISTANZIALE 25,5X33,7X12	SPACER	ENTRETOISE	DISTANZSTUCK 25,5X33,7X12	DISTANCIADOR 25,5X33,7X12
10	B07S01557R	SUPP. RUOTA	WHEEL SUPPORT	SUPPORT ROUE	RADHALTERUNG	SOP. RUEDA
11	B07100045R	RUOTA IN GOMMA 16.650 X 8	RUBBER WHEEL	ROUE EN CAOUTCHOUC	GUMMIRAD	RUEDA DE GOMA 16.650 X 8
12	B01300336R	FUSELLO RUOTE PU	PICK-UP WHEELS SPINDLE	FUSEAU ROUES PU	ACHSCHENKEL R DER PICK-UP	PIVOTE DE LAS RUEDAS PU
13	B02040005R	CUSCINETTO 6205-2RS CAT.BST004	BEARING	ROULEMENT	LAGER	COJINETE 6205-2RS CAT.BST004
14	B01301058R	DISTANZIALE 26X33.7X61.5	SPACER	ENTRETOISE	DISTANSCHEIBE 26X33.7X61.5	DISTANCIADOR 26X33.7X61.5
15	F01020562R	VITE M16X2X30 U5739 8.8ZN	SCR. M16X2X30 U5739 8.8ZN	VIS M16X2X30 U5739 8.8 ZN	SCHRAUBE M16X2X30 U5739 8.8 ZN	TORNILLO M16X2X30 U5739 8.8ZN
16	B01301065R	SPINA 16X95 2F 5	PIN	GOUPILLE	STECKSTIFT 16X95	CLAVIJA 16X95 2F 5
17	B011B0499R	SPINA A MOLLA A DOPPIO GIRO 4	PIN	GOUPILLE CLIPS	ZAPFEN	CLAVIJA DE MUELLE CON DOBLE G
18	F02100086R	SPINA E.P. 5X 30 U6873 C70 ZN	PIN EL. 5 X30 DIN 1481 GALVAN.	FICHE EL. 5 X30 DIN 1481 ZN	SPANNSTIFT 5 X30 DIN 1481 ZN	CLAVIJA EL.P. 5X 30 U6873 C70
19	B07S01793R	BRACCIO RUOTA DX PU 220	RIGHT PICK-UP WHEEL ARM 220	BRAS ROUE DROIT PU220	RECHTER PICK-UP RADTRAEGERARM	BRAZO DE LA RUEDA DER PU 220
20	B01300919R	DISTANZIALE 26X33.7X35.2	SPACER	ENTRETOISE	ABSTANDSTUECK 26X33.7X35.2	DISTANCIADOR 26X33.7X35.2
21	B01300918R	FLANGIA PARAFIENO FORO 25	DIAM. 25 HOLE FLANGE	BRIDE TROU DIAM. 25	FLANSCH 25	BRIDA MEDIDOR-HENO ORIFICIO 25

TAV_210

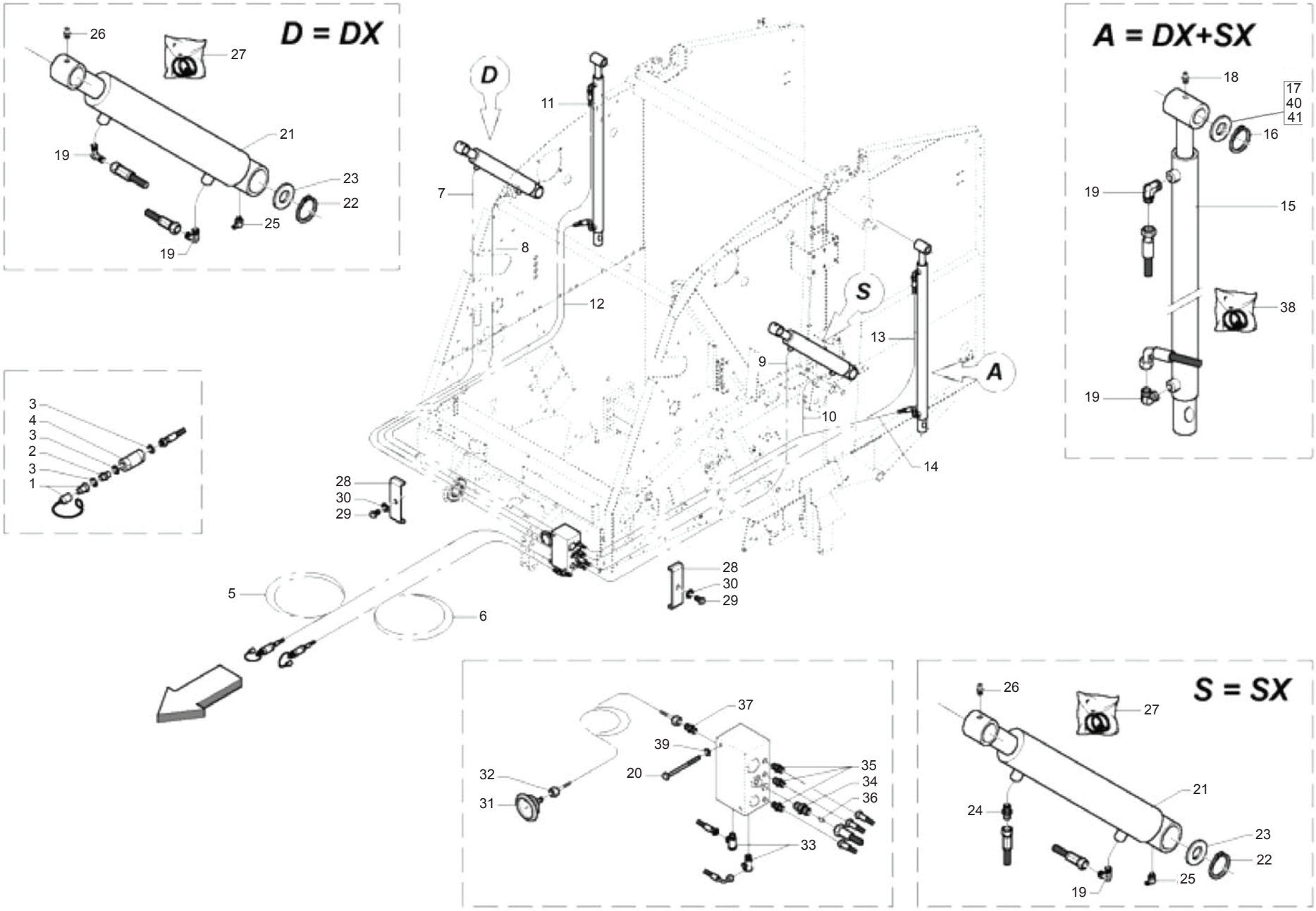
D = DX
26
27
21
19
23
22
25
19
D
11
7
8
12
S
13
9
A
10
14
28
30
29
5
6
A = DX+SX
18
17
40
41
16
19
15
38
19
3
4
3
2
3
1
28
30
29
37
39
32
20
35
34
36
31
33
S = SX
26
27
21
24
23
22
19
25

IMPIANTO IDRAULICO MACCHINA
MACHINE HYDRAULIC SYSTEM

TAV_210

Pos.	Cod.	Descrizione	Description	Description	Benennung	Descripcion
1	B0H6000A0R	INNESTO RAP.NV 12GAS-M	QUICK CLUTCH	EMBRAYAGE	SCHNELLKUPPLUNG	ACOPLAMIENTO R P.NV 12GAS-M
2	B0H6000AXR	NIPPLO 1 2	NIPPLE 1 2	NIPPLE 1 2	NIPPEL 1 2	NIPLE 1 2
3	B01442015R	ROS. 21 X27X1,5 RAME -1 2	WASHER	RONDELLE	BEILAGSCHEIBE 1 2	ARAND.21 X27X1,5 COBRE -1 2
4	B0H000040R	FILTRO IN LINEA 92400126X	FILTER IL12 60 R 94001261	FILTRE EN LIGNE IL12 60 R94001	FILTER IL12 60 R 94001261	FILTRO EN L NEA 92400126X
5	B0H000253R	TUBO IDRAUL.	HYDRAULIC HOSE	TUYAU HYDRAULIQUE	HYDRAULIKSCHLAUCH	TUBO HIDR UL.
6	B0H000254R	TUBO IDRAUL.	HYDRAULIC HOSE	TUYAU HYDRAULIQUE	HYDRAULIKSCHLAUCH	TUBO HIDR UL.
7	B0H000248R	TUBO IDRAUL. AZZURRO	BLUE HYDRAULIC HOSE	TUYAU HYDRAULIQUE BLEU	BLAUER HYDRAULIKSCHLAUCH	TUBO HIDR UL. AZUL CELESTE
8	B0H000247R	TUBO IDRAUL. GIALLO	YELLOW HYDRAULIC HOSE	TUYAU HYDRAULIQUE JAUNE	GELBER HYDRAULIKSCHLAUCH	TUBO HIDR UL. AMARILLO
9	B0H000249R	TUBO IDRAUL. AZZURRO	BLUE HYDRAULIC HOSE	TUYAU HYDRAULIQUE BLEU	BLAUER HYDRAULIKSCHLAUCH	TUBO HIDR UL. AZUL CELESTE
10	B0H000246R	TUBO IDRAUL. GIALLO	YELLOW HYDRAULIC HOSE	TUYAU HYDRAULIQUE JAUNE	GELBER HYDRAULIKSCHLAUCH	TUBO HIDR UL. AMARILLO
11	B0H000243R	TUBO IDRAUL. NEUTRO	HYDRAULIC HOSE	TUYAU HYDRAULIQUE NEUTRE	HYDRAULIKSCHLAUCH	TUBO HIDR UL. NEUTRO
12	B0H000244R	TUBO IDRAUL. ROSSO	RED HYDRAULIC HOSE	TUYAU HYDRAULIQUE ROUGE	ROTER HYDRAULIKSCHLAUCH	TUBO HIDR UL. ROJO
13	B0H000242R	TUBO IDRAUL. NEUTRO	HYDRAULIC HOSE	TUYAU HYDRAULIQUE NEUTRE	HYDRAULIKSCHLAUCH	TUBO HIDR UL. NEUTRO
14	B0H000245R	TUBO IDRAUL. ROSSO	RED HYDRAULIC HOSE	TUYAU HYDRAULIQUE ROUGE	ROTER HYDRAULIKSCHLAUCH	TUBO HIDR UL. ROJO
15	B0H400130R	MARTINETTO PORTELLONE 265	REAR DOOR JACK 265	VERIN PORTE ARRIERE 265	ZYLINDER TUER 265	CILINDRO DE LA PUERTA 265
16	F02050112R	ANELLO E.DE 30X 1,5 U7435 ZN	SEEGER RING 30X 1,5 U7435 C70	SEEGER E. 30 X 1,5 U7435 C70	SEEGERING E. 30X 1,5 U7435 C70	ANILLO E. 30 X 1,5 U7435 C70
17	B01300153R	SPES. 30 40 2 ZINCATO	SHIM GALV	ENTRETOISE GALV	DISTANZSTUECK 30 40 2	ESPES. 30 40 2 CINCADO
18	B04200610R	INGRASS.A SFERE M6X1 LUNGO	GREASE NIPPLE	GRAISSEUR HYDRAULIQUE	GERADER SCHMIERNIPPEL M6X1	ENGRASADOR DE ESFERAS M6X1
19	B0H000009R	RACC. L 10 SOLO COR RASTELLI	UNION ELBOW 10	RACCORD L 10 SEULEMENT CORP	ANSCHLUSSSTUECK L 10	EMP. L 10 SOLO COR RASTELLI
20	F01020051R	VITE M6X1X90 U5737 8.8ZN	SCR. M6X1X90 U5737 8.8ZN	VIS M6X 1X 90 U5737 8.8 ZN	SCHRAUBE M6X 1X90 U5737 8.8 ZN	TORNILLO M6X1X90 U5737 8
21	B0H400128R	MARTINETTO PRESSIONE 265	PRESSURE JACK 265	VERIN PRESSION 265	PRESSZYLINDER 265	CILINDRO DE PRESI N 265
22	B01700035R	ANEL. D ARR. ALB. 35-E UNI3653	SEEGER RING	BAGUE SEEGER	SEEGERRING 35-E	ANIL. DE PARAD. RB. 35-E UNI3
23	B01519696R	SPES. 35 47 1	SHIM	ENTRETOISE	DISTANZSTUCK 35 50 1	ESPES. 35 47 1
24	B0H0P0006R	RACC. I 10 SOLO CORP. RASTELLI	CONNECTION	RACCORD	KUPPLUNG I 10 NUR KOERPER	EMP. I 10 SOLO CUERP. RASTELLI
25	F01100013R	ING.M 6X1 7663-C 9SMNPB28 ZN	SPHERE NIPPLE M6X1 90	GRAISSEUR A BILLES M6X1 90	KUGELFETTBSCHSE M6X1 90	ENG.M 6X1 7663-C 9SMNPB28 ZN
26	B04200610R	INGRASS.A SFERE M6X1 LUNGO	GREASE NIPPLE	GRAISSEUR HYDRAULIQUE	GERADER SCHMIERNIPPEL M6X1	ENGRASADOR DE ESFERAS M6X1
27	B0H400146R	KIT GUAR. MARTIN H400128-129-	SEAL KIT FOR H400128-129-134	KIT JOINTS POUR H400128-129-13	DICHTUNGSSATZ FUER H400128-129	KIT JUNTAS CILIND H400128-129-
28	B0C005132R	CAVALLOTTO DI FISSAGGIO	FIXING U BOLT	BOULON DE FIXAGE	U-BUEGEL	PUENTE DE FIJACI N
29	F01020450R	VITE M8X1,25X40 U5739 8.8ZN	SCR. M8X1,25X40 U5739 8.8ZN	VIS M8X1,25X40 U5739 8.8ZN	SCHRA. M8X1,25X40 U5739 8.8ZN	TORNILLO M8X1,25X40 U5739 8.8
30	F01410051R	ROS.M8 8,4X 17X1,6 U6592 ZN	WASHER M8 8,4X17X1,6 U6592 ZN	RONDELLE M8 8,4X17X1,6 ZN	SCHEIBE M8 8,4X17X1,6 U6592 ZN	ARAND.M8 8,4X 17X1,6 U6592 ZN
31	B0H000256R	MANOMETRO HT	GAUGE HT	MANOMETRE HT	MANOMETER HT	MAN METRO HT
32	B0H000255R	TUBO CAPILLARE MINITEST	CAPILLARY HOSE	TUYAU CAPILLAIRE MINITEST	KAPILLARROEHRCHEN	TUBO CAPILAR MINITEST
33	B0H000103R	RACCORDO O 12 TN131-12LR	FILLET 0 12	RACCORD O 12	HOHLKEHLEN ANSCHLUSSSTUECK 0	RACOR O 12 TN131-12LR
34	B0H000182R	RACCORDO PER RIDUTT. DI FLUSSO	OIL FLOW REDUCER PIPE FITTING	RACCORD POUR REDUCTEUR DE FLUX	ANSCHLUSS FUER REDUKTIONS	RACOR PARA REDUCT. DE FLUJO
35	B0H000139R	RACCORDO I 10 RASTELLI	UNION I 10	RACCORD I SEULEMENT CORPS	VERBINDUNGSTUECK I 10	RACOR I 10 RASTELLI
36	B00500070R	GRANO M8 CON FORO 1,75MM	DOWEL M8 WITH HOLE 1.75MM	TOURILLON M8 AVEC TROU 1,75 MM	KORN MIT LOCH 1.75 MM	PASADOR M8 CON ORIFICIO 1,75M
37	B0H000140R	NIPPLO GIUNZ GAS CILIN.1 4-1 4	NIPPLE 1 4-1 4	NIPPLE JONCTION	NIPPEL 1 4-1 4	NIPLE DE UNI N GAS CILIN.1 4-1
38	B0H400147R	KIT GUAR. MARTIN H400130-131-	SEAL KIT FOR H400130-131-135	KIT JOINTS POUR H400130-131-13	DICHTUNGSSATZ FUER H400130-131	KIT JUNTAS CILIND. H400130-131
39	F01420035R	ROS.M6 6,4X 18X1,6 U6593 ZN	WASHER D.6	RONDELLE D.6	KUPFERSCHEIBE D.6	ARAND.M6 6,4X 18X1,6 U6593
40	B01300100R	SPES. 30,3 40 0,5 ZINCATO	SHIM GALV	ENTRETOISE GALV	DISTANZSTUECK 30,3 40 0,5	ESPES. 30,3 40 0,5 CINCADO
41	B01300101R	SPES. 30,3 40 1 ZINCATO	SHIM GALV	ENTRETOISE GALV	DISTANZSTUECK 30,3 40 1	ESPES. 30,3 40 1 CINCADO

TAV_215

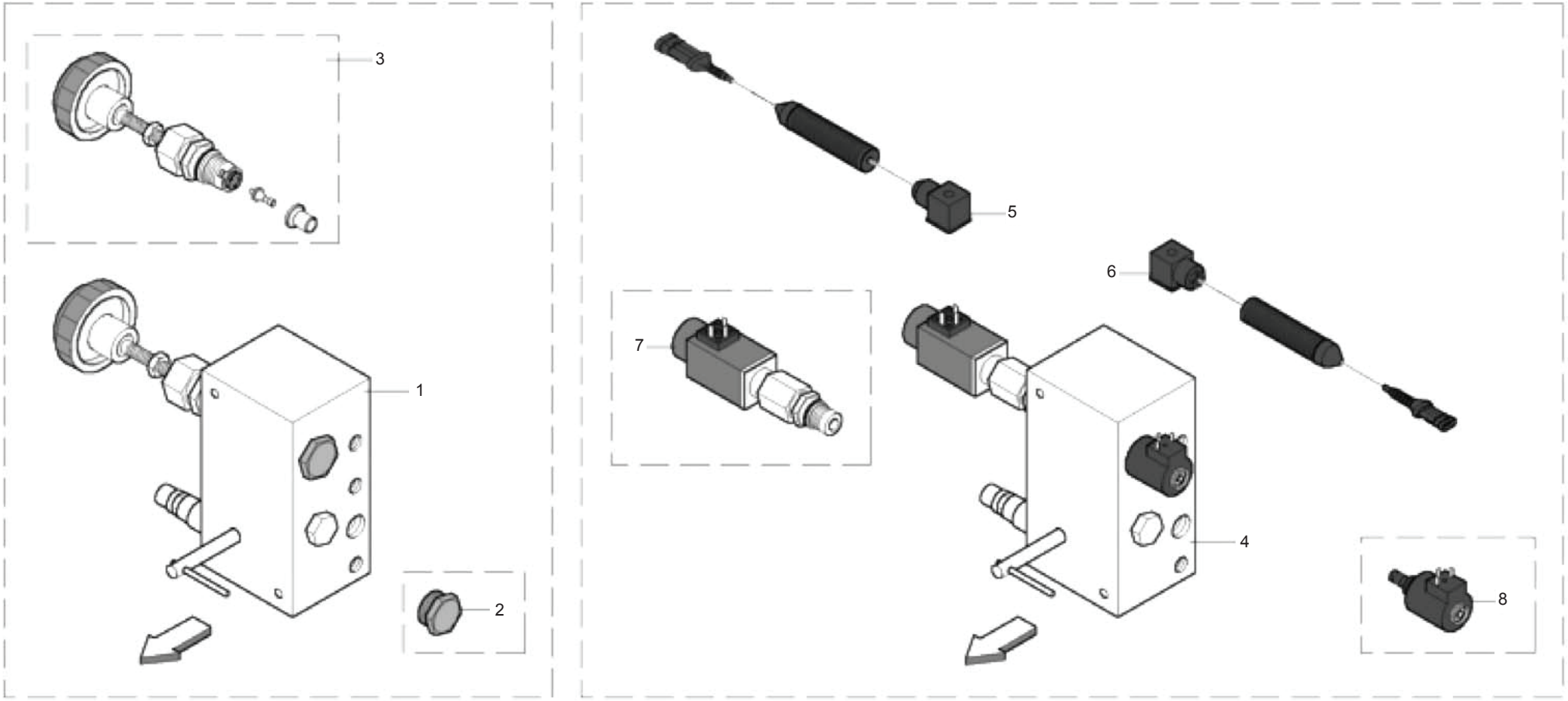

VALVOLA GEOMETRIA-PRESSIONE (ELETTRONICA E MECCANICA)
GEOMETRY-PRESSURE VALVE (ELECTRONIC AND MECHANICAL)

TAV_215

Pos.	Cod.	Descrizione	Description	Description	Benennung	Descripcion
1	B0H0P0020R	VALVOLA MECCANICA EXT. SERIE 2	VALVE FRB14 PM-GM	SOUPAPE FRB14 PM-GM	VENTIL FRB14	V LVULA MEC NICA EXT SERIE 2
2	B0H000278R	TAPPO PER ALLOGGIAMENTO ON OFF	PLUG	BOUCHON POUR LOGEMENT ON OFF	PROPFEN FUER ON OFF	TAP N PARA ALOJAMIENTO ON OFF
3	B0H000277R	MANOPOLA TARATA PER B0H0P0020R	VMP5 TS.V SMERIGL.TARATA A 195	VMP5 TS	VMP5 TS.V 195BAR	MANDO CALIBRADO
4	B0H0P0021R	VALVOLA ELETTRON. EXT. SERIE 2	VALVE	SOUPAPE	VENTIL FRB14	V LVULA ELECTR . EXT. SERIE 2
5	B0E0P0006R	MODULO PRESSIONE	PRESSURE MODULE	MODULE PRESSION	MODULE DRUCK	M DULO DE PRESI N
6	B0E0P0007R	MODULO GEOMETRIE	GEOMETRIES MODULE	MODULE GEOMETRIES	MODULE GEOMETRIE	M DULO DE LAS GEOMETR AS
7	B0H000279R	VALVOLA ELETT.IDR. GEOM.PRESS.	VALVE HYDRS	SOUPAPE HYDRAULIQUE	HYDRAULISCHE VANNE	V LVULA EL C.HIDR U. GEOM.PRES
8	B0H000281R	VALVOLA IDRAULICA GEOM. PRESS	VALVE HYDRS ON OFF	SOUPAPE HYDRAULIQUE ON OFF	SPEZIELLE HYDRAULISCHE VANNE O	V LVULA HIDR ULICA GEOM.

TAV_220

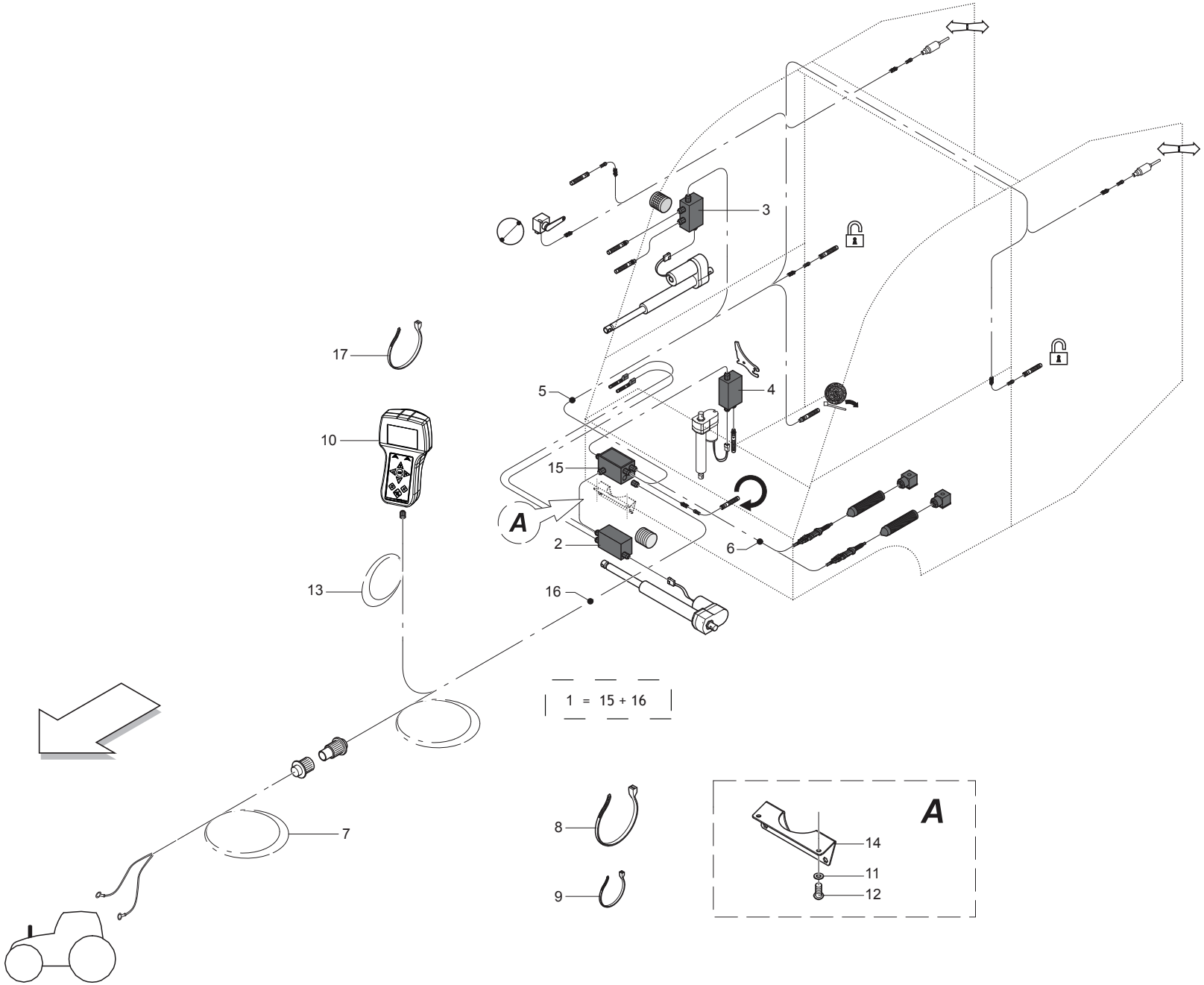

MASCHIO

cod. F07022338

CABLAGGIO
CONTROL SYSTEM

TAV_220

Pos.	Cod.	Descrizione	Description	Description	Benennung	Descripcion
1	B0E0P0002R	MOD.POW.BOX CON CAVI	POWER BOX MODULE WITH CONNECTI	MODULE POWER BOX AVEC ATTEL. C	MODULE KONTROLLBOX	MOD.POW.BOX CON CABLES
2	B0E0P0003R	MOD.FILO COMPL.DI SENSORI M8	TWINE MODULE COMPLETE WITH SEN	MODULE FICELLE COMPLET AVEC CA	MODULE GARN	MOD.HILO COMPL.DE SENSORES
3	B0E0P0004R	MODULO RETE	NET MODULE WITH CONNECTION C6P	MODULE FILET AVEC ATTELAGE C6P	MODULE NETZ MIT ANSCHLUSS	M DULO DE RED
4	B0E0P0005R	MODULO CUT CON ATTACCO C6P0085	CUT MODULE WITH CONNECTION C6P	MODULE CUT AVEC ATTELAGE C6P00	MODULE CUT MIT ASCHLUSS	M DULO CUT CON CONEXI N C6P00
5	B0E0P0072R	CABLAGGIO MACCHINA	BUS	BUS	BUS FUER HALL EFFEKT	CABLEADO DE LA M QUINA
6	B0E0P0009R	CABLAGGIO BUS AUSILIARIO	AUXILIARY BUS	BUS AUXILIAIRE	BUS	CABLEADO BUS AUXILIAR
7	B0E0P0010R	CAVO TRATTORE	TRACTOR CABLE	CABLE TRACTEUR	KABEL SCHLEPPER	CABLE DEL TRACTOR
8	F05150066R	FASCETTA POLYA. 9X265 NERA	CLAMP 9X265 BLACK			BANDA POLYA. 9X265 NEGRA
9	F05150055R	FASCETTA POLYA. 3,6X200 NERA	WHITE BAND	BANDE BIANCHE	WEIBE BAND	BANDA POLYA. 3,6X200 NEGRA
10	F05012085R	MON DISPLAY EASYTRONIC V2018	MON DISPLAY EASYTRONIC V2018			MON DISPLAY EASYTRONIC V2018
11	F01410051R	ROS.M8 8,4X 17X1,6 U6592 ZN	WASHER M8 8,4X17X1,6 U6592 ZN	RONDELLE M8 8,4X17X1,6 ZN	SCHEIBE M8 8,4X17X1,6 U6592 ZN	ARAND.M8 8,4X 17X1,6 U6592 ZN
12	F01410051R	ROS.M8 8,4X 17X1,6 U6592 ZN	WASHER M8 8,4X17X1,6 U6592 ZN	RONDELLE M8 8,4X17X1,6 ZN	SCHEIBE M8 8,4X17X1,6 U6592 ZN	ARAND.M8 8,4X 17X1,6 U6592 ZN
13	B0E0P0065R	CABLAGGIO MACCHINA	TRACTOR MACHINE WIRING FOR POW	CABLAGE TRACTEUR	KABLE FUER TRAKTOR	CABLEADO DE LA M QUINA
14	B0C6P0360R	SOSTEGNO MODULO A FILO	SUPPORT FORM WIRE			SOPORTE M DULO CON HILO
15	B0E0P0066R	MOD.POW.BOX SENCA CAVI	DISPLAY WITH CARD SPRINTER EXT	DISPLAY WITH FICHE SPRINTER EX	KONTROLLBOX OHNE KABEL	MOD.POW.CAJA SIN CABLES
16	B0E0P0065R	CABLAGGIO MACCHINA	TRACTOR MACHINE WIRING FOR POW	CABLAGE TRACTEUR	KABLE FUER TRAKTOR	CABLEADO DE LA M QUINA
17	F02300061R	FASCETTA POLYA. 250X4,8 NERA	POLYA.FASTENING STRAPS 250X4,8			BANDA POLYA. 250X4,8 NEGRA

TAV_225

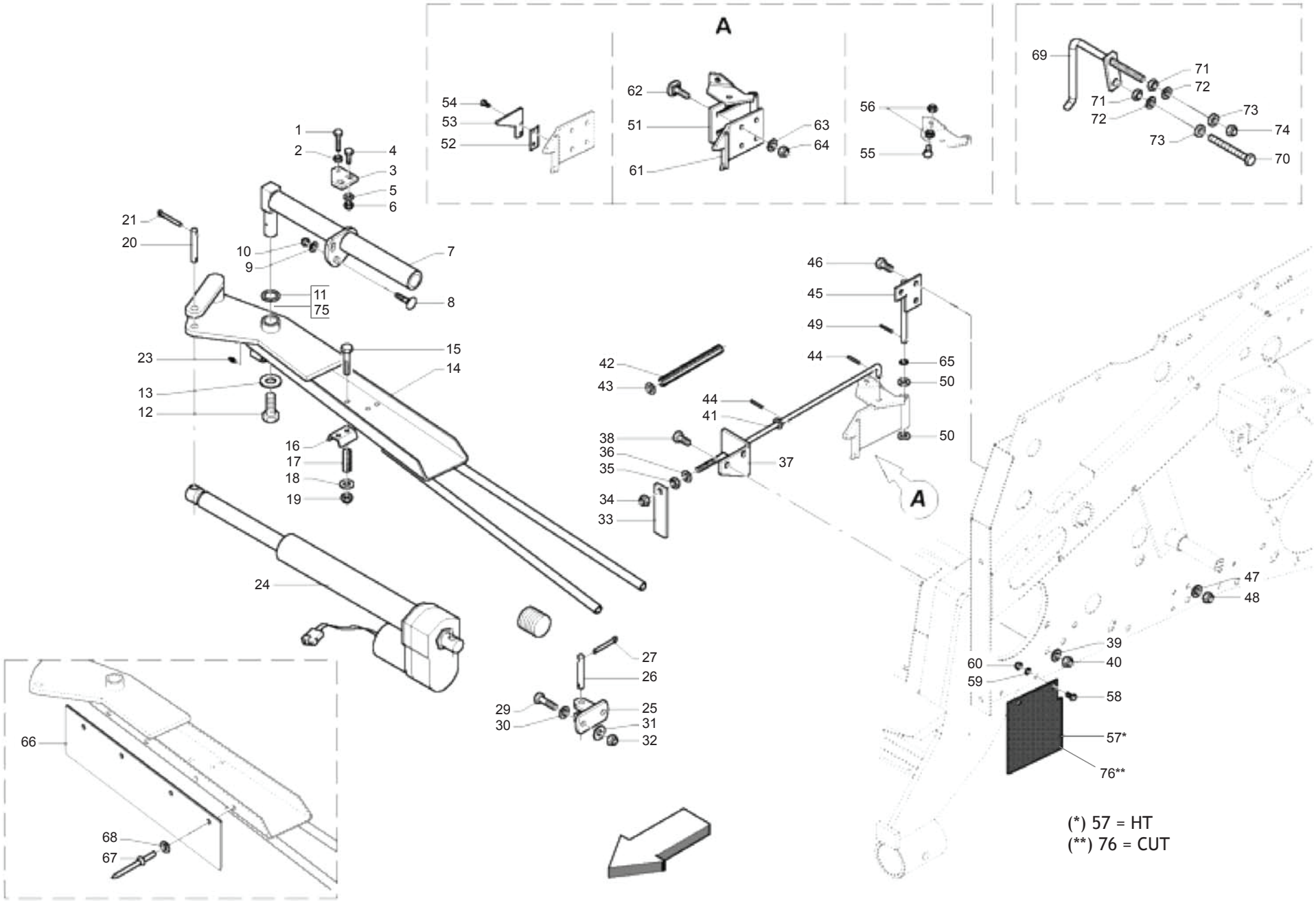

(*) 57 = HT
(**) 76 = CUT

MASCHIO

cod. F07022338

LEGATORE FILO
TWINE BINDER

TAV_225

Pos.	Cod.	Descrizione	Description	Description	Benennung	Descripcion
1	F01020485R	VITE M10X1,5X50 U5739 8.8ZN	SCR. M10X1,5X50 U5739 8.8ZN	VIS M 10X50	SCHRAUBE M 10X50	TORNILLO M10X1,5X50 U5739 8
2	F01200270R	DADO M10X1,5 U5588 CL8 ZN	NUT M10X1,5 U5588 6.8ZN	ECROU M10X 1,5 U5588 6.8 ZN	MUTTER M10X 1,5 U5588 6.8 ZN	TUERCA M10X1,5 U5588 CL8 ZN
3	B0C005031R	FERMO DI POSIZIONE	LOCK	ARRET	ARRETIERUNG	TOPE DE POSICI N
4	F01020476R	VITE M10X1,5X30 U5739 8.8ZN	SCR. M10X1,5X30 U5739 8.8ZN	VIS M10X1,5X30 U5739 8.8 ZN	SCHRAUBE M10X1,5X30U5739 8.8ZN	TORNILLO M10X1,5X30 U5739 8.8
5	F01410062R	ROS.M10 10,5X 18X 2 U6592 ZN	WASHER M10 10,5X 18X 2 U6592	RONDELLE M10 10,5X18X2 ZN	DICHTUNGSRING M10 10,5X18X2 ZN	ARAND.M10 10,5X 18X 2 U6592 ZN
6	F01230202R	DADO M10X 1,5 D985 8 ZN	NUT M10 D985	ECROU AUTOBL. M10	SELBSTSPERR.MUTTER M10	TUERCA M10X 1,5 D985 8
7	B07S01524R	TRAVERSA	CROSS BAR	TRAVERSE	QUERTRAEGER	TRAVESA O
8	B00523421R	VITE SPECIALE TTQST M12X35-8.8	SPECIAL SCREW	VIS SPCIALE	SCHRAUBE TTQST M12X 35-8.8	TORNILLO ESPECIAL TTQST M12X3
9	F01410076R	ROS.M12 13X 24X2,5 U6592 ZN	WASHER 12 13X 24X2,5 U6592 ZN	RONDEL. M12 13X24X2,5 U6592 ZN	SCHEIBE M12 13X24X2,5 U6592 ZN	ARAND.M12 13X 24X2,5 U6592 ZN
10	F01230213R	DADO M12X1,75 U7474 CL8 ZN	NUT M12X1,75 U7474 6SZN	ECROU AUTOBL. M12	SELBSTSPERR.MUTTER M12	TUERCA M12X1,75 U7474 CL8 ZN
11	B01300135R	SPES. 28 44 0,5	SHIM	ENTRETOISE	DISTANZSTUECK 28 44 0,5	ESPES. 28 44 0,5
12	F01020562R	VITE M16X2X30 U5739 8.8ZN	SCR. M16X2X30 U5739 8.8ZN	VIS M16X2X30 U5739 8.8 ZN	SCHRAUBE M16X2X30 U5739 8.8 ZN	TORNILLO M16X2X30 U5739 8.8ZN
13	B01519319R	RALLA 16X38X5	FIFTH WHEEL	BUTEE	SCREIBE	RANGUA 16X38X5
14	B07S01805R	BRACCIO LEGATORE FILO	TWINE WRAPPING ARM	BRAS LIAGE FICELLE	GARNDINDINGUNSARM	BRAZO ATADOR DE HILO
15	F01020068R	VITE M8X1,25X40 U5737 8.8ZN	SCR. M8X1,25X40 U5737 8.8ZN	VIS M 8X1,25X40 U5737 8.8 ZN	SCHRA. M8X1,25X40 U5737 8.8 ZN	TORNILLO M8X1,25X40 U5737 8.8
16	B0C630434R	FRENA SPAGO	TWINE BRAKE	PINCE FICELLE	GARNBREMSE	FRENA CUERDA
17	B01821993R	MOLLA	SPRING	RESSORT	FEDER	MUELLE
18	F01410051R	ROS.M8 8,4X 17X1,6 U6592 ZN	WASHER M8 8,4X17X1,6 U6592 ZN	RONDELLE M8 8,4X17X1,6 ZN	SCHEIBE M8 8,4X17X1,6 U6592 ZN	ARAND.M8 8,4X 17X1,6 U6592 ZN
19	B00920208R	DADO AUTOB.BASSO M 8-5S D985	NUT M8X1 D985 8ZN	ECROU	SELBSTSICHERNDE MUTTER M8-5S	TUERCA M8X1 D985 8
20	B01A29508R	SPINA MARTINETTO	CYLINDER PIN	GOUPILLE VERIN	STIFT	CLAVIJA DEL CILINDRO
21	B01150430R	COPIGLIA 4X 30 U1336 ZN	GALV PIN	GOUPILLE GALV	SPLINT	PASADOR 4X 30 U1336 ZN
23	B04200610R	INGRASS.A SFERE M6X1 LUNGO	GREASE NIPPLE	GRAISSEUR HYDRAULIQUE	GERADER SCHMIERNIPPEL M6X1	ENGRASADOR DE ESFERAS M6X1
24	B0E0P0087R	ATTUAT. LEGATORE FILO	ACTUATOR LINEAR	ACTIONNEUR	AKTUATOR	ACTUADOR ATADOR DE HILO
25	B07S01525R	ATTACCO ATTUATORE	ACTUATOR ATTACHMENT	ATTELAGE ACTIONNEUR	HALTERUNG	CONEXI N DEL ACTUADOR
26	B01A29508R	SPINA MARTINETTO	CYLINDER PIN	GOUPILLE VERIN	STIFT	CLAVIJA DEL CILINDRO
27	B01150430R	COPIGLIA 4X 30 U1336 ZN	GALV PIN	GOUPILLE GALV	SPLINT	PASADOR 4X 30 U1336 ZN
29	F01020516R	VITE M12X1,75X45 U5739 8.8ZN	SCR. M12X1,75X45 U5739 8.8ZN	VIS M12X1,75X45 U5739 8.8 ZN	SCHARAUBE M12X1,75X45 U5739 ZN	TORNILLO M12X1,75X45 U5739 8
30	F01410076R	ROS.M12 13X 24X2,5 U6592 ZN	WASHER 12 13X 24X2,5 U6592 ZN	RONDEL. M12 13X24X2,5 U6592 ZN	SCHEIBE M12 13X24X2,5 U6592 ZN	ARAND.M12 13X 24X2,5 U6592 ZN
31	F01420120R	ROS.M12 13X36X2,5 U6593 ZN	WASHER M12 13X36X2,5 U6593 ZN	RONDELLE M12 13X36X2,5 ZN		ARAND.M12 13X36X2,5 U6593 ZN
32	F01230213R	DADO M12X1,75 U7474 CL8 ZN	NUT M12X1,75 U7474 6SZN	ECROU AUTOBL. M12	SELBSTSPERR.MUTTER M12	TUERCA M12X1,75 U7474 CL8 ZN
33	B0C003115R	AGGANCIO TAGLIO	COUPLER	ACCROCHAGE COUPE	ANKOPPELUNGSVORRICHTUNG	ENGANCHE PARA CORTE
34	B00920208R	DADO AUTOB.BASSO M 8-5S D985	NUT M8X1 D985 8ZN	ECROU	SELBSTSICHERNDE MUTTER M8-5S	TUERCA M8X1 D985 8
35	F01200244R	DADO M8X1,25 U5588 CL8 ZN	NUT M8X1,25 U5588 6.8ZN	ECROU M8 X1,25 U5588 6.8 ZN	MUTTER M8 X1,25 U5588 6.8 ZN	TUERCA M8X1,25 U5588 CL8 ZN
36	F01410051R	ROS.M8 8,4X 17X1,6 U6592 ZN	WASHER M8 8,4X17X1,6 U6592 ZN	RONDELLE M8 8,4X17X1,6 ZN	SCHEIBE M8 8,4X17X1,6 U6592 ZN	ARAND.M8 8,4X 17X1,6 U6592 ZN
37	B0C005034R	SOSTEGNO ASTA	ROD SUPPORT	SUPPORT BARRE	STANGENSTUETZE	SOPORTE DE LA BARRA
38	F01020514R	VITE M12X1,75X40 U5739 8.8ZN	SCR. M12X1,75X40 U5739 8.8ZN	VIS M12X1,75X40 U5739 8.8ZN	SCHRA. M12X1,75X40 U5739 8.8ZN	TORNILLO M12X1,75X40 U5739 8.
39	F01410076R	ROS.M12 13X 24X2,5 U6592 ZN	WASHER 12 13X 24X2,5 U6592 ZN	RONDEL. M12 13X24X2,5 U6592 ZN	SCHEIBE M12 13X24X2,5 U6592 ZN	ARAND.M12 13X 24X2,5 U6592 ZN
40	F01230213R	DADO M12X1,75 U7474 CL8 ZN	NUT M12X1,75 U7474 6SZN	ECROU AUTOBL. M12	SELBSTSPERR.MUTTER M12	TUERCA M12X1,75 U7474 CL8 ZN
41	B00500098R	ASTA REGOLATRICE	ADJUSTMENT BAR	BARRE DE REGLAGE	REGELSTANGE	BARRA DE REGULACI N
42	B01800036R	MOLLA C FILO 1 L=203,5ZINCATA	C-SPRING	RESSORT C	C-FEDER	MUELLE C HILO 1 L=203,5CINCADO
43	F01410051R	ROS.M8 8,4X 17X1,6 U6592 ZN	WASHER M8 8,4X17X1,6 U6592 ZN	RONDELLE M8 8,4X17X1,6 ZN	SCHEIBE M8 8,4X17X1,6 U6592 ZN	ARAND.M8 8,4X 17X1,6 U6592 ZN
44	B01110320R	SPINA ELAST. 3X 20 SS DIN 1481	PIN	GOUPILLE	STIFT	CLAVIJA EL ST. 3X 20 SS DIN 14
45	B07S00987R	FULCRO LAMA	BLADE FULCRUM	POINT D APPUI LAME	KLINGENSCHWENKPUNKT	FULCRO DE LA CUCHILLA
46	F01020440R	VITE M8X1,25X25 U5739 8.8ZN	SCR. M8X1,25X25 U5739 8.8ZN	VIS M8X1,25X25 U5739 8.8 ZN	SCHRAUBE M8X1,25X25U5739 8.8ZN	TORNILLO M8X1,25X25 U5739 8.8
47	F01410051R	ROS.M8 8,4X 17X1,6 U6592 ZN	WASHER M8 8,4X17X1,6 U6592 ZN	RONDELLE M8 8,4X17X1,6 ZN	SCHEIBE M8 8,4X17X1,6 U6592 ZN	ARAND.M8 8,4X 17X1,6 U6592 ZN
48	B00920208R	DADO AUTOB.BASSO M 8-5S D985	NUT M8X1 D985 8ZN	ECROU	SELBSTSICHERNDE MUTTER M8-5S	TUERCA M8X1 D985 8
49	B01110320R	SPINA ELAST. 3X 20 SS DIN 1481	PIN	GOUPILLE	STIFT	CLAVIJA EL ST. 3X 20 SS DIN 14
50	F01410062R	ROS.M10 10,5X 18X 2 U6592 ZN	WASHER M10 10,5X 18X 2 U6592	RONDELLE M10 10,5X18X2 ZN	DICHTUNGSRING M10 10,5X18X2 ZN	ARAND.M10 10,5X 18X 2 U6592 ZN
51	B07SP0044R	FULCRO DI TAGLIO	CUTTING FULCRUM	POINT D APPUI COUPE	SCHNEIDFULCRUM	FULCRO DE CORTE
52	B07U00011R	LAMA FILO	BLADE BY MARTOR ART. 37	LAME ETS. MARTOR ART.37	KLINGE MARTOR ART. 37 ABB. 533	CUCHILLA CON HILO
53	B0C002765R	FISSAGGIO LAMA	BLADE FASTERNER	FIXAGE LAME	KLINGENHALTERUNG	FIJACI N DE GOMA
54	F01020378R	VITE M5X0,8X16 U5739 8.8ZN	SCR. M5X0,8X16 U5739 8.8ZN	VIS M5X0,8X16 U5739 8.8ZN	SCHRAUBE M5X0,8X16 U5739 8.8ZN	TORNILLO M5X0,8X16 U5739 8
55	F01020440R	VITE M8X1,25X25 U5739 8.8ZN	SCR. M8X1,25X25 U5739 8.8ZN	VIS M8X1,25X25 U5739 8.8 ZN	SCHRAUBE M8X1,25X25U5739 8.8ZN	TORNILLO M8X1,25X25 U5739 8.8
56	F01200244R	DADO M8X1,25 U5588 CL8 ZN	NUT M8X1,25 U5588 6.8ZN	ECROU M8 X1,25 U5588 6.8 ZN	MUTTER M8 X1,25 U5588 6.8 ZN	TUERCA M8X1,25 U5588 CL8 ZN
57	B07V00080R	PROTEZ.LEG.FILO SPRINTER NEW	TWINE TYING KIT PROTECTION	PROTECTION LIAGE FICELLE SPRIN	GARNBINDUNGSSCHUTZ	PROTECC.ATAD. HILO SPRINTER N
58	F01020436R	VITE M8X1,25X20 U5739 8.8ZN	SCR. M8X1,25X20 U5739 8.8ZN	VIS M8X1,25X 20 U5739 8.8 ZN	SCHRAUBE M8X1,25X20U5739 8.8ZN	TORNILLO M8X1,25X20 U5739 8.8
59	F01420048R	ROS.M8 8,4X 24X 2 U6593 ZN	WASHER M8 8,4X 24X2 U6593 ZN	RONDELLE M8 8,4X24X 2 U6593 ZN	SCHEIBEN M8 8,4X24X 2 U6593 ZN	ARAND.M8 8,4X 24X 2 U6593 ZN

TAV_225

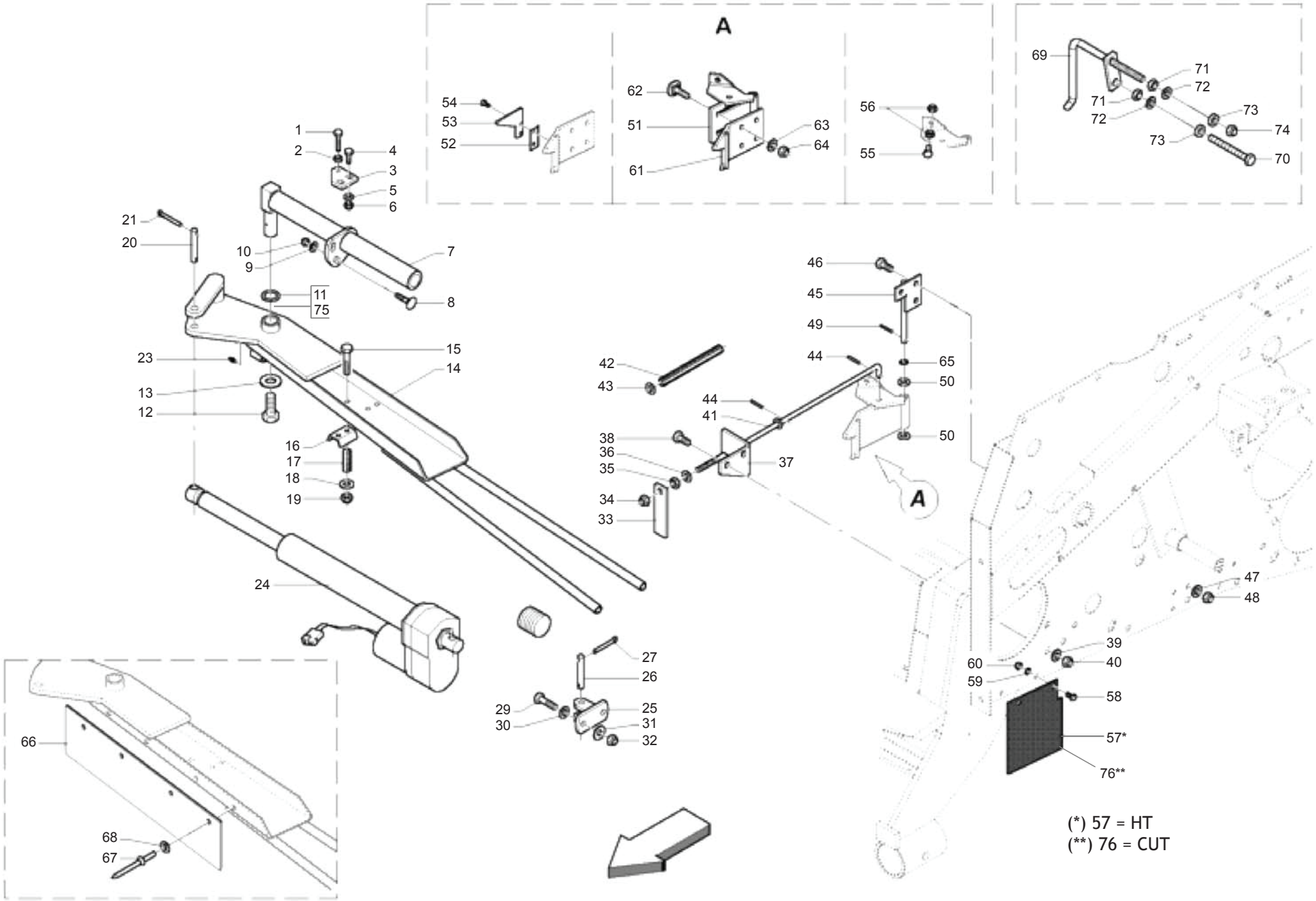

MASCHIO

cod. F07022338

LEGATORE FILO
TWINE BINDER

Pos.	Cod.	Descrizione	Description	Description	Benennung	Descripcion
60	B00920208R	DADO AUTOB.BASSO M 8-5S D985	NUT M8X1 D985 8ZN	ECROU	SELBSTSICHERNDE MUTTER M8-5S	TUERCA M8X1 D985 8
61	B07SP0045R	PORTA LAMA	BLADE HOLDER	ATTELAGE LAME	KLINGEHALTER	PORTA CUCHILLA
62	F01060202R	VITE M8X1,25X25 U5731 4.6ZN	SCR. M8X1,25X25 U5731 4.6ZN	VIS M8X1,25X25 U5731 4.6	DUEBEL M8X1,25X25 U5731 4.6 ZN	TORNILLO M8X1,25X25 U5731 4.6
63	F01410051R	ROS.M8 8,4X 17X1,6 U6592 ZN	WASHER M8 8,4X17X1,6 U6592 ZN	RONDELLE M8 8,4X17X1,6 ZN	SCHEIBE M8 8,4X17X1,6 U6592 ZN	ARAND.M8 8,4X 17X1,6 U6592 ZN
64	B00920208R	DADO AUTOB.BASSO M 8-5S D985	NUT M8X1 D985 8ZN	ECROU	SELBSTSICHERNDE MUTTER M8-5S	TUERCA M8X1 D985 8
65	B04313037R	ANELLO TORICO OR 3037	TORIC RING	BAGUE TORIQUE OR 3037	RING	ANILLO T RICO OR 3037
66	B07VP0004R	PROT. BRACCIO LEG.A FILO	TWINE WRAP ARM PROTECTION	PROTECTION BRAS	SCHUTZARM	PROT. BRAZO ATADOR CON HILO
67	F02250137R	RIVETTO STR. 5 X20 U9200A AL	RIVET 5 X20 U9200A AL			REMACHE EXTR. 5 X20 U9200A A
68	F01420023R	ROS.M5 5,3X 15X1,5 U6593 ZN	WASHER M5 5,3X 15X1,5 U6593			ARAND.M5 5,3X 15X1,5 U6593
69	B07S01238R	DITO PRENDI FILO	TWINE GRASPER	DOIGT PRISE FICELLE	FINGEL FUER GARN	DEDO COGE HILO
70	F01020524R	VITE M12X1,75X90 U5739 8.8ZN	SCR. M12X1,75X90 U5739 8.8ZN			TORNILLO M12X1,75X90 U5739 8
71	F01200293R	DADO M12X1,75 U5588 CL8 ZN	NUT M12X1,75 U5588 6S ZN	ECROU M12X1,75 U5588 6S ZN	MUTTER M12X1,75 U5588 6S ZN	TUERCA M12X1,75 U5588 CL8 ZN
72	F01410076R	ROS.M12 13X 24X2,5 U6592 ZN	WASHER 12 13X 24X2,5 U6592 ZN	RONDEL. M12 13X24X2,5 U6592 ZN	SCHEIBE M12 13X24X2,5 U6592 ZN	ARAND.M12 13X 24X2,5 U6592 ZN
73	B01516038R	RALLA 13 32 5	FIFTH WHEEL	BUTEE	SCHEIBE	RANGUA 13 32 5
74	F01230213R	DADO M12X1,75 U7474 CL8 ZN	NUT M12X1,75 U7474 6SZN	ECROU AUTOBL. M12	SELBSTSPERR.MUTTER M12	TUERCA M12X1,75 U7474 CL8 ZN
75	B01300134R	SPESSORE 28 44 0.2	SHIM 28 44 0.2			ESPESOR 28 44 0.2
76	B07V00072R	PROT. IN GOMMA LAT.	SIDE RUBBERED PROTECTIONS	PROTECTION LATERALE EN CAOUT.	SEITER GUMMISCHUTZ	PROT. DE GOMA LAT.

TAV_230

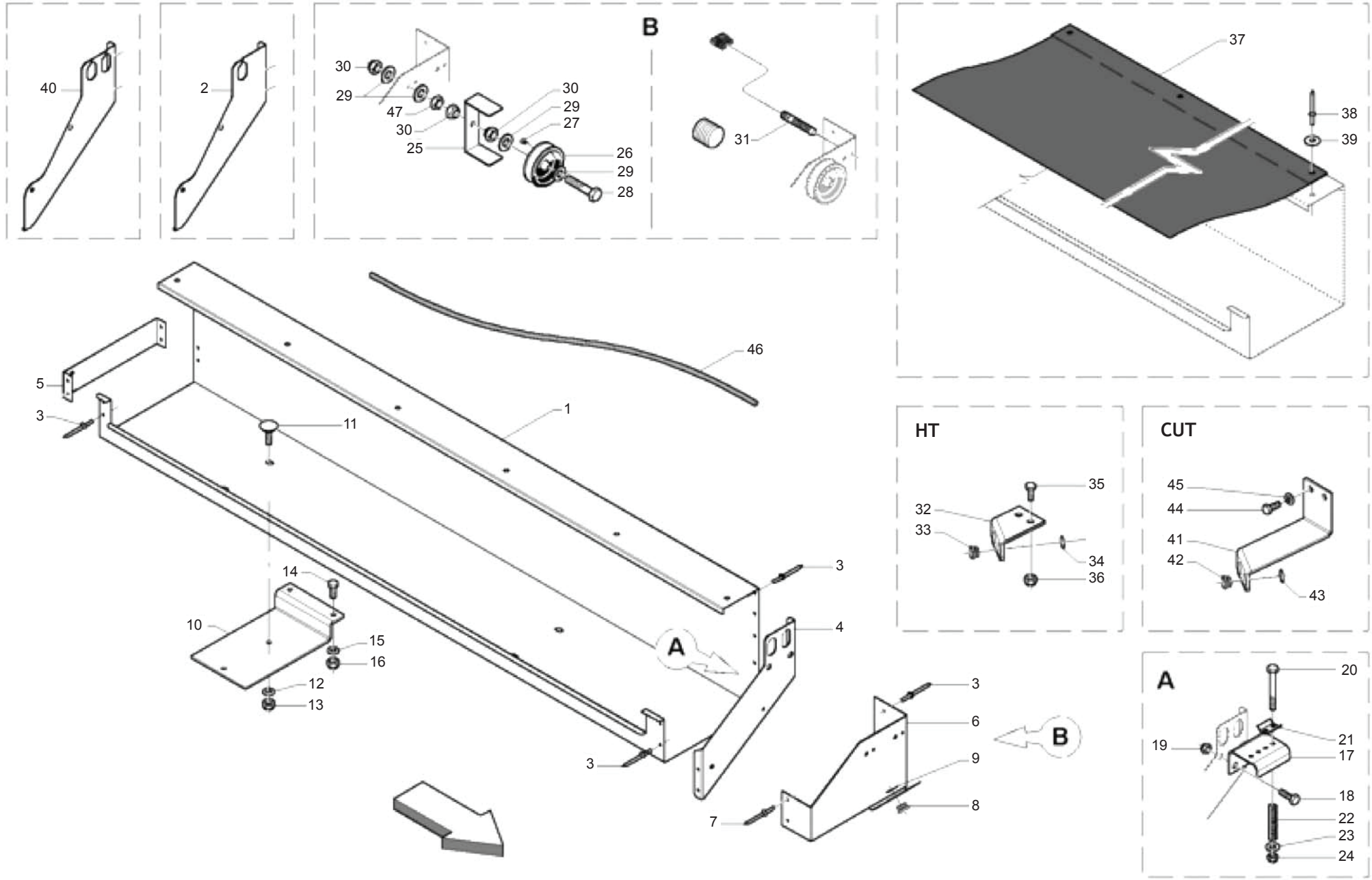
40
2
B
30
29
47
30
25
30
29
27
26
29
28
31
37
38
39
46
5
3
11
1
14
10
15
16
12
13
3
4
A
3
6
9
8
7
B
HT
35
32
33
34
36
CUT
45
44
41
42
43
A
20
19
21
17
18
22
23
24

LEGATOER FILO: CASSONETTO
TWINE BINDER: TWINE BOX

TAV_230

Pos.	Cod.	Descrizione	Description	Description	Benennung	Descripcion
1	B0C3P0037R	CORPO CASSONE SPAGO	TWINE HOLDER BODY	CORPS BOITE A FICELLE	GEHAUSE DER BINDENGARNAUFBEWAH	CUERPO DE CAJ N DE CUERDA
2	B0C4P0038R	DIVISORE	SEPARATOR	DIVISEUR	TEILVORRICHTUNG	DIVISOR
3	B01000010R	RIVETTO STR. 6X12 U9200A AL	RIVET	RIVET	ABREISSNIETEN 6X10	REMACHE EXTR. 6X12 U9200A A
4	B0C4P0036R	DIVISORE	DIVIDER			DIVISOR
5	B0C3P0036R	FERMO TERMINALE	STOP TERMINAL			TOPE TERMINAL
6	B0C005016R	ATTACCO CARRUCOLE	PULLEY ATTACHMENT	ATTELAGE POULIE	ROLLEN BEFESTIGUNG	CONEXI N POLEAS
7	B01000011R	RIVETTO STR. 6X12 U9200A AL	RIVET 6X12 U9200A AL	RIVET	ABREISSNIETEN 6X15	REMACHE EXTR. 6X12 U9200A A
8	B03500097R	BUSSOLA PASSAGGIO SPAGO	TWINE GUIDE BUSH	DOUILLE PASSAGE FICELLE	SCHNURFUEHRUNGSBUCHSE	CASQUILLO DE PASO DE LA CUERD
9	F02050101R	ANELLO E. DE 25X 1,2 U7435 C7	SEEGER RING E. 25X1,2 7435 C70	SEEGER E. 25X 1,2 U7435 C70	SEEGERING E. 25X 1,2 U7435 C70	ANILLO E. DE 25X 1,2 U7435 C7
10	B0C004685R	SOSTEGNO CASSONE SPAGO	TWINE BOX HOLDER	SUPPORT RESERVOIR FICELLE	SCHNURKASTENHALTERUNG	SOPORTE CAJ N DE CUERDA
11	B00321020R	VITE M10X1,5 X 30 U5731 4.6ZN	SCREW	VIS	SCHRAUBE VERZINKT TTQST M10X20	TORNILLO M10X1,5 X 30 U5731 4
12	F01420060R	ROS.M10 10,5X 30X2,5 U6593 ZG	GALV.WASHER 10,5X30X2,5 U6593	RONDELLE 10,5X30	SCHEIBE 10,5X30	ARAND.M10 10,5X 30X2,5 U6593
13	F01230202R	DADO M10X 1,5 D985 8 ZN	NUT M10 D985	ECROU AUTOBL. M10	SELBSTSPERR.MUTTER M10	TUERCA M10X 1,5 D985 8
14	F01020476R	VITE M10X1,5X30 U5739 8.8ZN	SCR. M10X1,5X30 U5739 8.8ZN	VIS M10X1,5X30 U5739 8.8 ZN	SCHRAUBE M10X1,5X30U5739 8.8ZN	TORNILLO M10X1,5X30 U5739 8.8
15	F01410062R	ROS.M10 10,5X 18X 2 U6592 ZN	WASHER M10 10,5X 18X 2 U6592	RONDELLE M10 10,5X18X2 ZN	DICHTUNGSRING M10 10,5X18X2 ZN	ARAND.M10 10,5X 18X 2 U6592 ZN
16	F01230202R	DADO M10X 1,5 D985 8 ZN	NUT M10 D985	ECROU AUTOBL. M10	SELBSTSPERR.MUTTER M10	TUERCA M10X 1,5 D985 8
17	B0C005012R	BASE FRENASPAGO	TWINE BRAKE BASE	BASE ARRET FICELLE	SCHNURBREMSENAUFLAGE	BASE FRENADO CUERDA
18	F01020506R	VITE M12X1,75X20 U5739 8.8ZN	SCR. M12X1,75X20 U5739 8.8ZN	VIS M 12X20	SCHRAUBE M 12X20	TORNILLO M12X1,75X20 U5739
19	F01230213R	DADO M12X1,75 U7474 CL8 ZN	NUT M12X1,75 U7474 6SZN	ECROU AUTOBL. M12	SELBSTSPERR.MUTTER M12	TUERCA M12X1,75 U7474 CL8 ZN
20	F01020068R	VITE M8X1,25X40 U5737 8.8ZN	SCR. M8X1,25X40 U5737 8.8ZN	VIS M 8X1,25X40 U5737 8.8 ZN	SCHRA. M8X1,25X40 U5737 8.8 ZN	TORNILLO M8X1,25X40 U5737 8.8
21	B0C630434R	FRENA SPAGO	TWINE BRAKE	PINCE FICELLE	GARNBREMSE	FRENA CUERDA
22	B01821993R	MOLLA	SPRING	RESSORT	FEDER	MUELLE
23	F01410051R	ROS.M8 8,4X 17X1,6 U6592 ZN	WASHER M8 8,4X17X1,6 U6592 ZN	RONDELLE M8 8,4X17X1,6 ZN	SCHEIBE M8 8,4X17X1,6 U6592 ZN	ARAND.M8 8,4X 17X1,6 U6592 ZN
24	B00920208R	DADO AUTOB.BASSO M 8-5S D985	NUT M8X1 D985 8ZN	ECROU	SELBSTSICHERNDE MUTTER M8-5S	TUERCA M8X1 D985 8
25	B0C230438R	FERMO	LOCK	ARRET	HALTER	TOPE
26	B03730455R	CARRUCOLA FILO RIF.333 60	PULLEY	POULIE AVECFIL REF.333 60	LAUFROLLE	POLEA HILO REF.333 60
27	B003F4813R	VITE AUTOF.T. 4,8X13 DIN798	SCREW	VIS	SCHRAUBE	TORNILLO AUROROSC.CAB. 4,8X13
28	B00180655R	VITE M6X1X 55 U5739 8.8ZN	SCREW	VIS	ZINKSCHRAUBE TE M6X55-8.8 UNI	TORNILLO M6X1X 55 U5739 8.8ZN
29	F01410037R	ROS.M6 6,4X12,5X1,6 U6592 ZN	WASHER M6 6,4X12,5X1,6 U6592ZN	RONDEL.M6 6,4X12,5X1,6 U6592ZN	SCHEIB.M6 6,4X12,5X1,6 U6592ZN	ARAND.M6 6,4X12,5X1,6 U6592 ZN
30	F01230184R	DADO M6X1 D985 8ZN	NUT M6X1 D985 8ZN			TUERCA M6X1 D985 8
31	B0E000102R	SENS. DI PROSSIMITA FILO	PROXIMITY SENSORS M8	SENSEUR DE PROXIMITE	ABSTANDSMELDER	SENS. DE PROXIMIDAD DE HILO
32	B0C005385R	ATTACCO BOCCOLE PASSAFILO HT	BUSH COUPLING HT	ATTELAGE DOUILLES PASSE-FICELL	HUELSEANSCHLUSS	ENGANCHE CASQUILLOS PASACAB
33	B03500097R	BUSSOLA PASSAGGIO SPAGO	TWINE GUIDE BUSH	DOUILLE PASSAGE FICELLE	SCHNURFUEHRUNGSBUCHSE	CASQUILLO DE PASO DE LA CUERD
34	F02050101R	ANELLO E. DE 25X 1,2 U7435 C7	SEEGER RING E. 25X1,2 7435 C70	SEEGER E. 25X 1,2 U7435 C70	SEEGERING E. 25X 1,2 U7435 C70	ANILLO E. DE 25X 1,2 U7435 C7
35	F01020512R	VITE M12X1,75X35 U5739 8.8ZN	SCR. M12X1,75X35 U5739 8.8ZN	VIS M12X1,75X35 5739 8.8 ZN	SCHR. M12X1,75X35 5739 8.8 ZN	TORNILLO M12X1,75X35 U5739 8
36	F01230213R	DADO M12X1,75 U7474 CL8 ZN	NUT M12X1,75 U7474 6SZN	ECROU AUTOBL. M12	SELBSTSPERR.MUTTER M12	TUERCA M12X1,75 U7474 CL8 ZN
37	B07VP0002R	COPERT CASSONE SPAGO 265-280	TWINE BOX COVER 265-280	COUVERTURE GRANDE CAISSE 265-2	DECKEL GARNGEHAUSE	COBERT CAJ N DE CUERDA 265-280
38	B01000010R	RIVETTO STR. 6X12 U9200A AL	RIVET	RIVET	ABREISSNIETEN 6X10	REMACHE EXTR. 6X12 U9200A A
39	F01420035R	ROS.M6 6,4X 18X1,6 U6593 ZN	WASHER D.6	RONDELLE D.6	KUPFERSCHEIBE D.6	ARAND.M6 6,4X 18X1,6 U6593
40	B0C4P0037R	DIVISORE	SEPARATOR	DIVISEUR	TEILVORRICHTUNG	DIVISOR
41	B0C005002R	ATT. BOCCOLE PASSAFILO HTC-HTU	BUSH ATTACHMENT	ATTELAGE DOUILLE	BUCHSENBEFESTIGUNG	CONEX. CASQUILLOS PASACABLE
42	B03500097R	BUSSOLA PASSAGGIO SPAGO	TWINE GUIDE BUSH	DOUILLE PASSAGE FICELLE	SCHNURFUEHRUNGSBUCHSE	CASQUILLO DE PASO DE LA CUERD
43	F02050101R	ANELLO E. DE 25X 1,2 U7435 C7	SEEGER RING E. 25X1,2 7435 C70	SEEGER E. 25X 1,2 U7435 C70	SEEGERING E. 25X 1,2 U7435 C70	ANILLO E. DE 25X 1,2 U7435 C7
44	F01020516R	VITE M12X1,75X45 U5739 8.8ZN	SCR. M12X1,75X45 U5739 8.8ZN	VIS M12X1,75X45 U5739 8.8 ZN	SCHARAUBE M12X1,75X45 U5739 ZN	TORNILLO M12X1,75X45 U5739 8
45	F01410076R	ROS.M12 13X 24X2,5 U6592 ZN	WASHER 12 13X 24X2,5 U6592 ZN	RONDEL. M12 13X24X2,5 U6592 ZN	SCHEIBE M12 13X24X2,5 U6592 ZN	ARAND.M12 13X 24X2,5 U6592 ZN
46	B07VP0012R	FUNE ELASTICA DIAM.6 - L=1720	ROPE ELASTIC 6 L=1720			CABLE EL STICO DI M.6 - L=1720
47	F01200232R	DADO M6X1 U5588 CL8 ZN	NUT M6X1 U5588 6.8ZN	ECROU 6 UNI 5588 6.8 ZN	MUTTER 6 UNI 5588 6.8 ZN	TUERCA M6X1 U5588 CL8 ZN

TAV_235

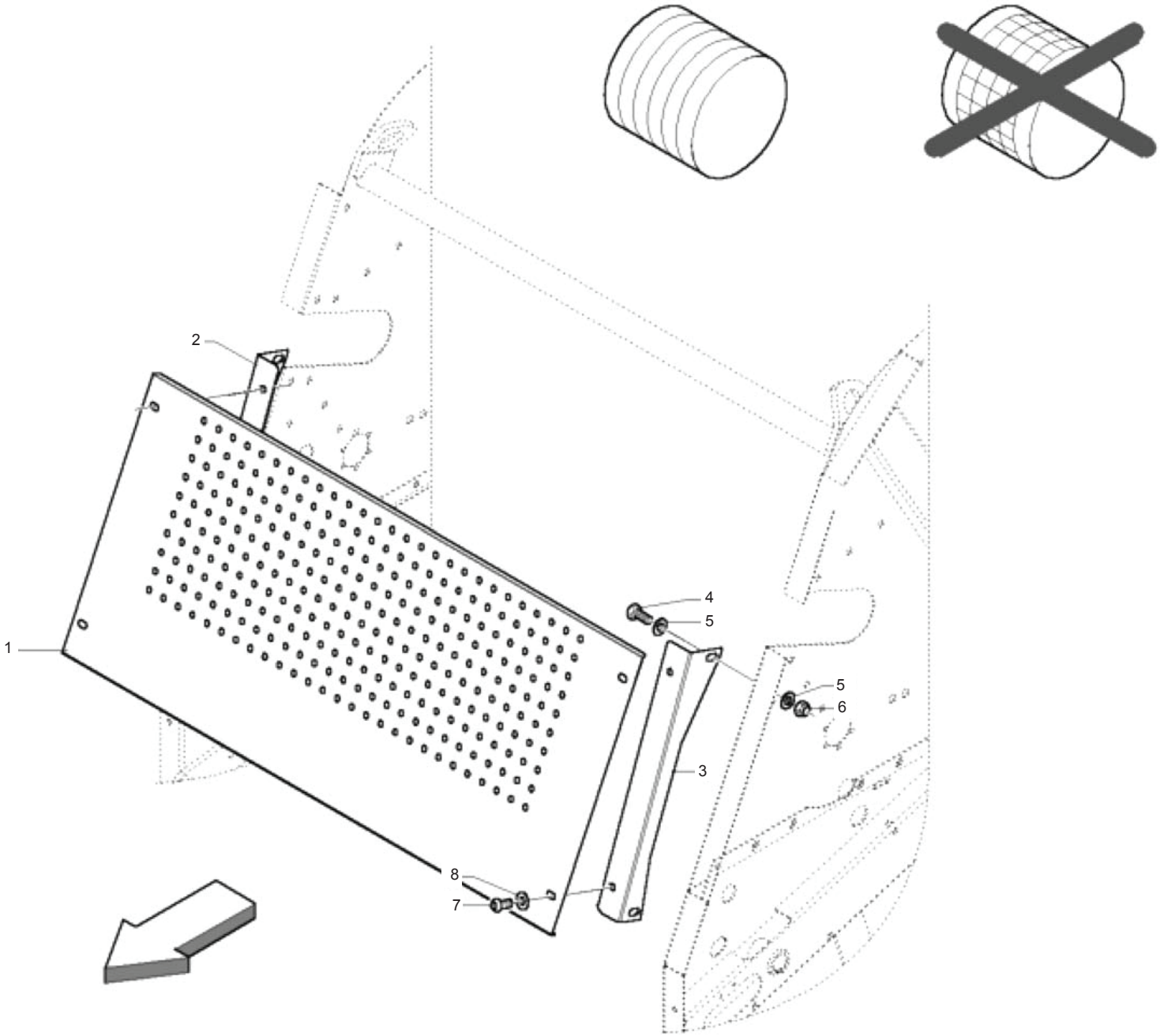

CARTER ANTERIORE (SOLO CON LEGATORE FILO)
FRONT CARTER (ONLY WITH TWINE BINDER)

TAV_235

Pos.	Cod.	Descrizione	Description	Description	Benennung	Descripcion
1	B0C3P0009R	PROTEZIONE SOLO FILO	ONLY TWINE PROTECTION	PROTECTION SEULEMENT FICELLE	SCHUETZ NUR GARN	PROTECCI N SOLO HILO
2	B0C3P0007R	ATTACCO DX PROTEZIONE FILO	TWINE RIGHT PROTECTION ATTACHM	ATTELAGE DROIT PROTECTION FICE	ANSCHLUSS RECHT GARNSCHUETZ	ENGANCHE DER PROTECCI N DE H
3	B0C3P0008R	ATTACCO SX PROTEZIONE FILO	TWINE LEFT PROTECTION ATTACHME	ATTELAGE GAUCHE PROTECTION FIC	ANSCHLUSS LINKS GARNSCHUETZ	ENGANCHE IZQ PROTECCI N DE HI
4	F01020508R	VITE M12X1,75X25 U5739 8.8ZN	SCR. M12X1,75X25 U5739 8.8ZN	VIS M12X1,75X25 U5739 8.8 ZN	SCHRAUBE M12X1,75X25U57398.8ZN	TORNILLO M12X1,75X25 U5739
5	F01410076R	ROS.M12 13X 24X2,5 U6592 ZN	WASHER 12 13X 24X2,5 U6592 ZN	RONDEL. M12 13X24X2,5 U6592 ZN	SCHEIBE M12 13X24X2,5 U6592 ZN	ARAND.M12 13X 24X2,5 U6592 ZN
6	F01230213R	DADO M12X1,75 U7474 CL8 ZN	NUT M12X1,75 U7474 6SZN	ECROU AUTOBL. M12	SELBSTSPERR.MUTTER M12	TUERCA M12X1,75 U7474 CL8 ZN
7	B00470825R	VITE TTEI M 8X 25-10,9 UNBRA	SCREW	VIS	SCHRAUBE TTEI M 8X25-10,9 UNBR	TORNILLO CAB.ALLEN CON HUECO
8	F01420048R	ROS.M8 8,4X 24X 2 U6593 ZN	WASHER M8 8,4X 24X2 U6593 ZN	RONDELLE M8 8,4X24X 2 U6593 ZN	SCHEIBEN M8 8,4X24X 2 U6593 ZN	ARAND.M8 8,4X 24X 2 U6593 ZN

TAV_240

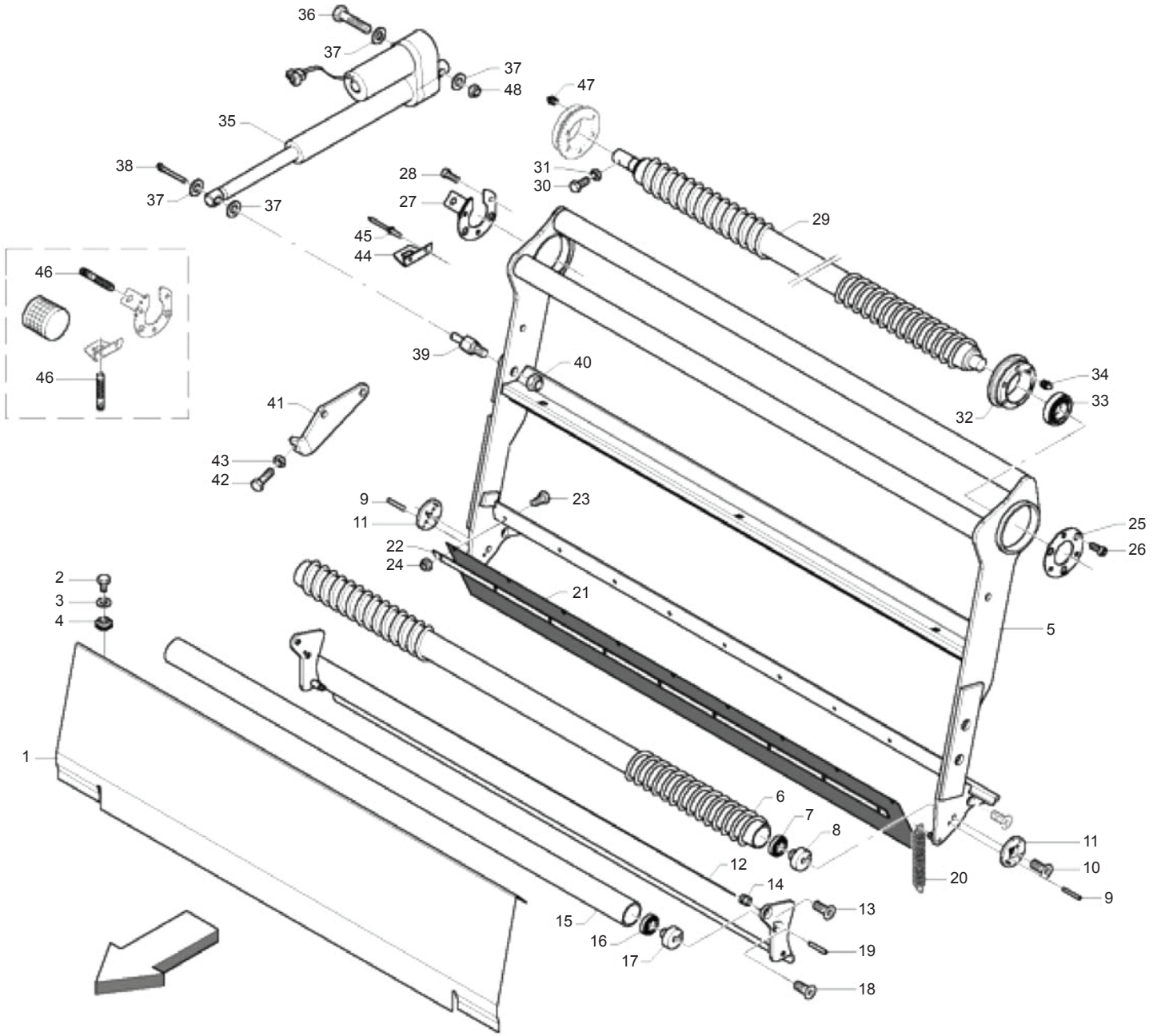

MASCHIO

cod. F07022338

LEGATORE RETE (PARTE 1)
NET BINDER (PART 1)

TAV_240

Pos.	Cod.	Descrizione	Description	Description	Benennung	Descripcion
1	B0C3P0035R	PROT. PORTARETE	NET HOLDER PROTECTION	PROTECTION PORTE FILET	SCHUETZ NETZHALTER	PROT. PORTA RED
2	F01020432R	VITE M8X1,25X16 U5739 8.8ZN	SCR. M8X1,25X16 U5739 8.8ZN	VIS M8 X1,25X16 U5739 8.8 ZN	SCHRAUBE M8X1,25X16U5739 8.8ZN	TORNILLO M8X1,25X16 U5739 8.8
3	F01410051R	ROS.M8 8,4X 17X1,6 U6592 ZN	WASHER M8 8,4X17X1,6 U6592 ZN	RONDELLE M8 8,4X17X1,6 ZN	SCHEIBE M8 8,4X17X1,6 U6592 ZN	ARAND.M8 8,4X 17X1,6 U6592 ZN
4	B00990003R	DADO TIPO C 4808-BM8X1,25	NUT	ECROU	MUTTER	TUERCA TIPO C 4808-BM8X1,25
5	B07SP0090R	BRACCIO PORTARETE	NET HOLDER ARM	BRAS PORTE FILET	NETZHALTERARM	BRAZO PORTARED
6	B07S00648R	RULLO FOLLE RETE	IDLE ROLLER	ROULEAU FOU	UMLENKWALZE	RODILLO LOCO RED
7	B02301716R	CUSC. 2203 E-2RS1TN9 RIF.SKF	BEARING	ROULEMENT	LAGER 2203 E-2RS1TN9 RIF. SKF	COJIN. 2203 E-2RS1TN9 REF.SKF
8	B035P0008R	PERNO RULLO FOLLE NEW	NEW IDLE ROLLER PIN	TOURILLON ROULEAU FOU NEW	BOLZEN UMLENKWALZE	PERNO RODILLO LOCO NEW
9	F02100079R	SPINA E.P. 5X20 U6873 C70 BR	PIN EL. 5X20 U6873 C70 BR			CLAVIJA EL.P. 5X20 30 U6873 C
10	B00441025R	VITE TSPEI M10X 25-10.9 UNI59	SCREW	VIS	SCHRAUBE VERZINKT TSPEI M10X25	TORNILLO CAB. AVE.ALLEN PAV M1
11	B013P0128R	RALLA DI FERMO	STOP FIFTH WHEEL	EXCENTRIQUES	DISTANZSCHEIBE	RANGUA DE TOPE
12	B07SP0286R	PINZA RETE	NET CLAMP	ETRIER FILET	NETZZANGE	PINZA CON RED
13	B00441020R	VITE TSPEI M10X 20-10.9 UNI 5	SCREW	VIS	SCHRAUBE TSPEI M10X 20-10.9	TORNILLO CAB. AVE.ALLEN PAV M
14	B01300401R	BUSSOLA FILETTATA	PIN WITHOUT NET	DOUILLE FILETEE	NETZAUFNAHMEZANGENBOLZEN	CASQUILLO ROSCADO
15	B07SP0100R	CORPO RULLO FOLLE LISCIO	SMOOTH IDLE ROLLER BODY	CORPS ROULEAU FOU LISSE	GEHAUSE DER GLATTLOSWALZE	CUERPO DEL RODILLO LOCO LISO
16	B02301716R	CUSC. 2203 E-2RS1TN9 RIF.SKF	BEARING	ROULEMENT	LAGER 2203 E-2RS1TN9 RIF. SKF	COJIN. 2203 E-2RS1TN9 REF.SKF
17	B035P0008R	PERNO RULLO FOLLE NEW	NEW IDLE ROLLER PIN	TOURILLON ROULEAU FOU NEW	BOLZEN UMLENKWALZE	PERNO RODILLO LOCO NEW
18	B00441020R	VITE TSPEI M10X 20-10.9 UNI 5	SCREW	VIS	SCHRAUBE TSPEI M10X 20-10.9	TORNILLO CAB. AVE.ALLEN PAV M
19	B01110612R	SPINA ELAST. 6X 12 SS DIN 1481	PIN	GOUPILLE	STIFT	CLAVIJA EL ST. 6X 12 SS DIN 14
20	B01800025R	MOLLA 2 13 98T GRUPPO RETE	SPRING	RESSORT	FEDER	MUELLE 2 13 98T GRUPO RED
21	B07VP0001R	BANDELLA DI SOSTEGNO	SUPPORT BAND	BANDE DE SUPPORT	HALTERBANDE	BARRA DE SOPORTE
22	B0C2P0020R	PREMIGOMMA	RUBBER HOLDER	PRESSE-CAOUTCHOUC	GUMMIDRUCKER	SUJETA GOMA
23	B00180620R	VITE M6X1X20 U5739 8.8ZN	SCREW	VIS	SCHRAUBE	TORNILLO M6X1X20 U5739 8
24	F01230184R	DADO M6X1 D985 8ZN	NUT M6X1 D985 8ZN			TUERCA M6X1 D985 8
25	B01300389R	FLANGIA DI CONTEGNO	FLANGE	FLASQUE	DICHTUNGSFLANSCH	BRIDA DE CONTENCI N
26	B00400825R	VITE M8X1,25X25 U5931 10.9ZD	SCREW	VIS	SCHRAUBE	TORNILLO M8X1,25X25 U5931 10
27	B0C004932R	PIASTRA RITEGNO	PLATE	PLAQUE	PLATTE	PLACA DE RETENCI N
28	B00400825R	VITE M8X1,25X25 U5931 10.9ZD	SCREW	VIS	SCHRAUBE	TORNILLO M8X1,25X25 U5931 10
29	B07S00649R	RULLO CONTARETE	NET COUNTER ROLLER	ROULEAU COMPTE-FILET	NETZZAHLERWALZE	RODILLO CONTADOR DE RED
30	F01020380R	VITE M5X0,8X20 U5739 8.8ZN	SCR. M5X0,8X20 U5739 8.8ZN	VIS M5X0,8X20 U5739 8.8ZN	SCHRAUBE M5X0,8X20 U5739 8.8ZN	TORNILLO M5X0,8X20 U5739 8
31	F01200220R	DADO M5X0,8 U5588 CL8 ZN	NUT M5X0,8 U5588 6.8ZN	ECROU 5 UNI 5588 6.8 ZN	MUTTER 5 UNI 5588 6.8 ZN	TUERCA M5X0,8 U5588 CL8 ZN
32	B02700044R	SUPP BRAC PORTA RETE E RULLO	NET AND ROLLER ARM SUPPORT	SUPPORT BRAS PORTE-FILET ET RO	LAGER DES NETZTRAGERARMS UND W	SOP. BRAZO PORTA RED Y RODILL
33	B02042517R	CUSC 6305-2RS CAT.B-ST004	BEARING	ROULEMENT	LAGER 6305-2RS	COJIN 6305-2RS CAT.B-ST004
34	F01100048R	ING.M 8X1,25 7663A 9SMNPB28 Z	GREASE NIPPLE M8X1,25 U7663A	GRAISSEUR A BILLES M8X1,25	SCHMIERBUECHSE M8X1,25 7663A	ENG.M 8X1,25 7663A 9SMNPB28 Z
35	B0E000045R	ATTUATORE RETE	NET ACTUATOR	ACTIONNEUR WARNER D13-05B5-06	AKTUATOR WARNER D13 05B506111	ACTUADOR RED
36	F01020164R	VITE M12X1,75X70 U5737 8.8ZN	SCREW M12X1,75X70 U5737 8.8ZN	VIS M12X1,75X70 ZN	SCHR. M12X1,75X70 U5737 8.8 ZN	TORNILLO M12X1,75X70 U5737 8.
37	F01410076R	ROS.M12 13X 24X2,5 U6592 ZN	WASHER 12 13X 24X2,5 U6592 ZN	RONDEL. M12 13X24X2,5 U6592 ZN	SCHEIBE M12 13X24X2,5 U6592 ZN	ARAND.M12 13X 24X2,5 U6592 ZN
38	F02200164R	COPIGLIA 3X 30 U1336 ZN	SPLIT PIN 3X 30 U1336 ZN			PASADOR 3X 30 U1336 ZN
39	B03500063R	PERNO ECCENTRICO	ECCENTRIC PIN	TOURILLON EXCENTRE	EXZENTERZAPFEN	PERNO EXC NTRICO
40	B00920516R	DADO M16X 1,5 D985 6S ZN	NUT M16X1,5 D985 6S ZN	ECROU	SELBSTSICHERNDE MUTTER M16-5S	TUERCA M16X 1,5 D985 6S
41	B0C4P0009R	FERMO	LOCK	ARRET	BLOCK	TOPE
42	F01020517R	VITE M12X1,75X50 U5739 8.8ZN	SCR. M12X1,75X50 U5739 8.8ZN	VIS M12X1,75X50 5739 8.8 ZN	SCHRA. M12X1,75X50 5739 8.8 ZN	TORNILLO M12X1,75X50 U5739 8
43	F01200293R	DADO M12X1,75 U5588 CL8 ZN	NUT M12X1,75 U5588 6S ZN	ECROU M12X1,75 U5588 6S ZN	MUTTER M12X1,75 U5588 6S ZN	TUERCA M12X1,75 U5588 CL8 ZN
44	B0C005200R	ATTACCO SENSORE RETE	NET SENSOR COUPLING	ATTELAGE CAPTEUR FILET	SENSORANSCHLUSS	CONEXI N SENSOR DE RED
45	B01000013R	RIVETTO STR. 6X18 U9200A AL	RIVET	RIVET	ABREISSNIETEN 6X18	REMACHE EXTR. 6X18 U9200A A
46	B0E000056R	SENSORE PROSSIMITA BALLA M12	PROXIMITY SENSOR	CAPTEUR DE PROXIMITE	ABSTANDSMELDER	SENSOR DE PROXIMIDAD DE LA BA
47	F01100048R	ING.M 8X1,25 7663A 9SMNPB28 Z	GREASE NIPPLE M8X1,25 U7663A	GRAISSEUR A BILLES M8X1,25	SCHMIERBUECHSE M8X1,25 7663A	ENG.M 8X1,25 7663A 9SMNPB28 Z
48	F01230213R	DADO M12X1,75 U7474 CL8 ZN	NUT M12X1,75 U7474 6SZN	ECROU AUTOBL. M12	SELBSTSPERR.MUTTER M12	TUERCA M12X1,75 U7474 CL8 ZN

TAV_245

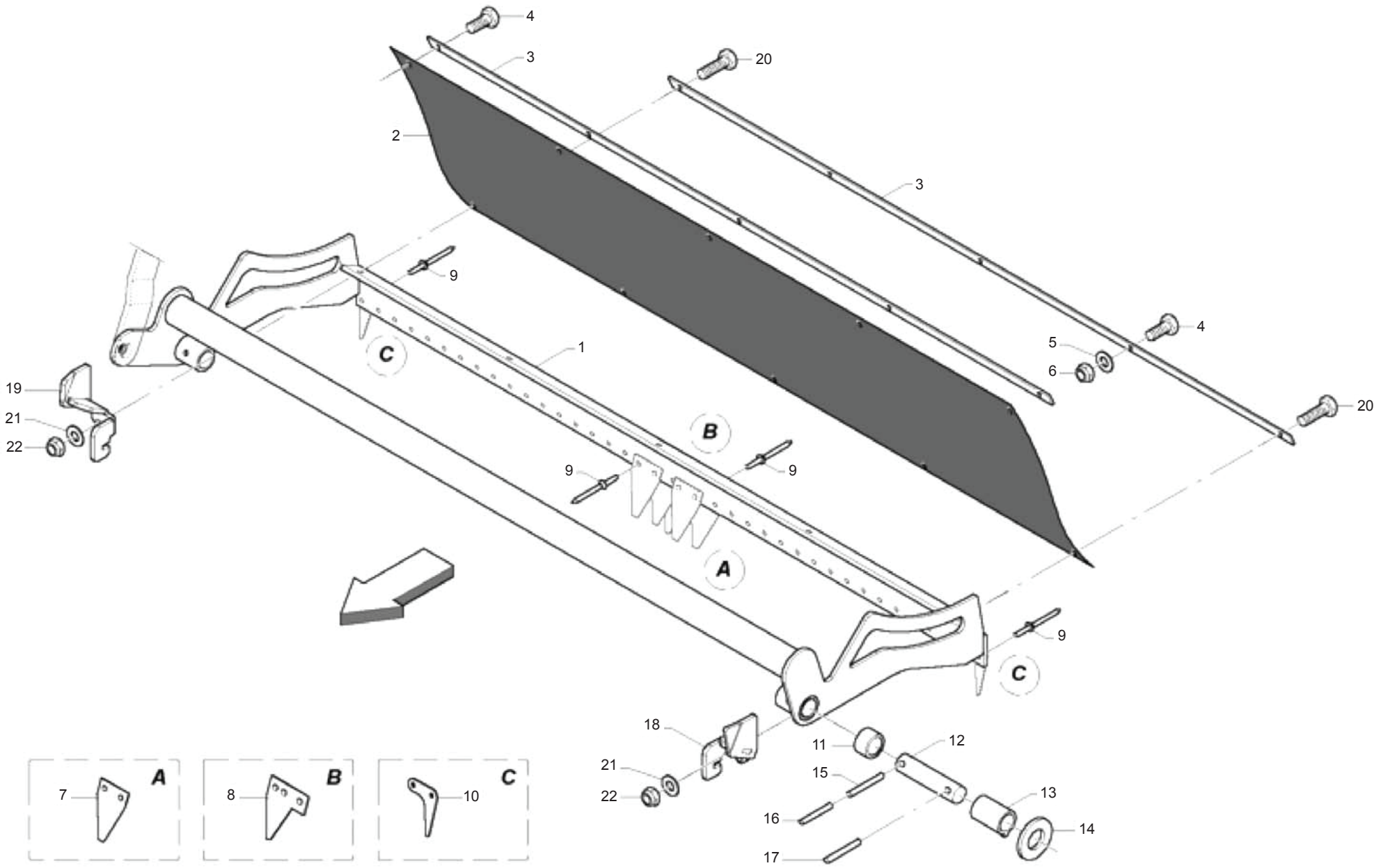
4
3
20
2
3
9
4
5
6
1
C
19
21
22
20
B
9
9
A
9
C
18
11
12
21
15
22
13
16
14
17
A
7
B
8
C
10

LEGATORE RETE (PARTE 2)
NET BINDER (PART 2)

TAV_245

Pos.	Cod.	Descrizione	Description	Description	Benennung	Descripcion
1	B07SP0279R	BRACCIO LAMA	KNIVE HARM	BRAS COUTEAUX	KLINGEARM	BRAZO CUCHILLA
2	B07VP0010R	CHIUSURA IN TELA PER LAMA	CLOTH CLOSURE FOR BLADE	FERMETURE EN TOILE POUR LAME	VERSCHLUSS AUS TUCH FUER KLING	CIERRE DE TELA PARA CUCHILLA
3	B0C002398R	PREMIGOMMA	RUBBERHOLDER	PRESSE-PNEU	GUMMIHALTERLEISTE	SUJETA GOMA
4	B00180620R	VITE M6X1X20 U5739 8.8ZN	SCREW	VIS	SCHRAUBE	TORNILLO M6X1X20 U5739 8
5	F01410037R	ROS.M6 6,4X12,5X1,6 U6592 ZN	WASHER M6 6,4X12,5X1,6 U6592ZN	RONDEL.M6 6,4X12,5X1,6 U6592ZN	SCHEIB.M6 6,4X12,5X1,6 U6592ZN	ARAND.M6 6,4X12,5X1,6 U6592 ZN
6	F01230184R	DADO M6X1 D985 8ZN	NUT M6X1 D985 8ZN			TUERCA M6X1 D985 8
7	B07U00012R	LAMINO RASSPE D200 LISCIA	PLATE RASPE D200	PETITE LAME DE COUPE FILET		HOJA RASSPE D200 LISA
8	B0C6P0334R	COMPENSO LAMINI SU BRACCIO LAM	SHIM	EPAISSEUR	DICHTUNG	COMPENSADO HOJAS EN BRAZO C
9	B01000013R	RIVETTO STR. 6X18 U9200A AL	RIVET	RIVET	ABREISSNIETEN 6X18	REMACHE EXTR. 6X18 U9200A A
10	B0C6P0532R	TERMINALE LAMA	TERMINALE LAMA.			TERMINAL DE LA CUCHILLA
11	B013C0012R	DISTANZIALE 25.5X33.7X20	SPACER	ENTRETOISE	DISTANZSTUECK	DISTANCIADOR 25,5X33,7X20
12	B01300390R	SPINA SX BRACCIO TAGLIA RETE	ARM LEFT PIN	EPINE GAUCHE BRAS COUPE-FILET	LINKER NETZSCHNEIDEVORRICHTUNG	CLAVIJA IZQ DEL BRAZO CORTA RE
13	B02526852R	BUSSOLA NYLON	NYLON BUSH	GALET	BUCHSE	CASQUILLO DE NAILON
14	B01522663R	SPES. 25 45	SHIM	ENTRETOISE	SCHEIBE	ESPES. 25 45
15	F02100090R	SPINA E.P. 5X 40 U6873 C70 BR	ELASTIC PIN 5X40	GOUJON ELASTIQUE 5X40	SPANNHUELSE 5X40	CLAVIJA EL.P. 5X 40 U6873 C70
16	F02100142R	SPINA E.P. 8X 40 U6873 C70 BR	ELASTIC PIN 8X40	GOUJON ELASTIQUE 8X40	SPANNHUELSE 8X40	CLAVIJA EL.P. 8X 40 U6873 C70
17	F02100142R	SPINA E.P. 8X 40 U6873 C70 BR	ELASTIC PIN 8X40	GOUJON ELASTIQUE 8X40	SPANNHUELSE 8X40	CLAVIJA EL.P. 8X 40 U6873 C70
18	B07SP0245R	FERMO DESTRO ALZO	RIGH STOP	ARRET DROIT	BLOCK RECHTS	TOPE DERECHO
19	B07SP0246R	FERMO SINISTRO ALZO	LEFT STOP	ARRET GAUCHE	BLOCK LINKS	TOPE IZQUIERDO
20	F01020408R	VITE M6X1X30 U5739 8.8ZN	SCR. M6X1X30 U5739 8.8ZN	VIS M 6X1X30	SCHRAUBE M 6X1X30	TORNILLO M6X1X30 U5739 8
21	F01410037R	ROS.M6 6,4X12,5X1,6 U6592 ZN	WASHER M6 6,4X12,5X1,6 U6592ZN	RONDEL.M6 6,4X12,5X1,6 U6592ZN	SCHEIB.M6 6,4X12,5X1,6 U6592ZN	ARAND.M6 6,4X12,5X1,6 U6592 ZN
22	F01230184R	DADO M6X1 D985 8ZN	NUT M6X1 D985 8ZN			TUERCA M6X1 D985 8

TAV_250

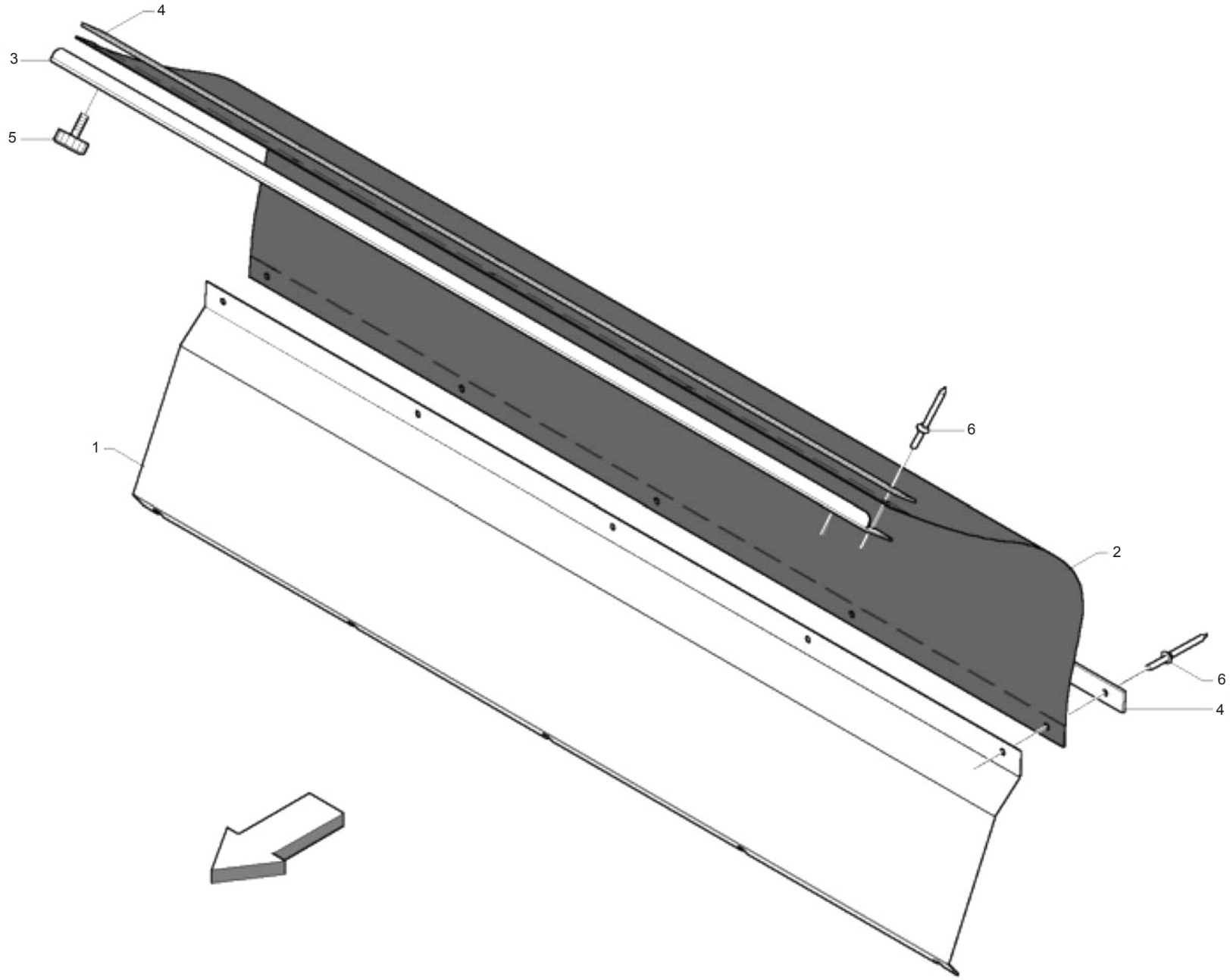

LEGATORE RETE (PARTE 3)
NETE BINDER (PART 3)

TAV_250

Pos.	Cod.	Descrizione	Description	Description	Benennung	Descripcion
1	B0C2P0030R	PROT. INFERIORE	LOWER PROTECTION	PROTECTION INFERIEURE	SCHUETZ UNTEN	PROT. INFERIOR
2	B07V00062R	CHIUSURA IN GOMMA	RUBBER CLOSING	FERMETURE EN CAOUTCHOUC	GUMMIVERSCHLUSS	CIERRE DE GOMA
3	B07MP0017R	SOSTEGNO PROT.	PROTECTION SUPPORT	SUPPORT PROTECTION	SCHTZHALTER	SOPORTE PROTE.
4	B0C002398R	PREMIGOMMA	RUBBERHOLDER	PRESSE-PNEU	GUMMIHALTERLEISTE	SUJETA GOMA
5	B07V00106R	VOLANTINO M8X15 DIAM. 30	KNOB WHEEL	VOLAN M 8 DIAM. 30X19	HANDRAD	VOLANTE M8X15 DI M. 30
6	B01000010R	RIVETTO STR. 6X12 U9200A AL	RIVET	RIVET	ABREISSNIETEN 6X10	REMACHE EXTR. 6X12 U9200A A

TAV_255

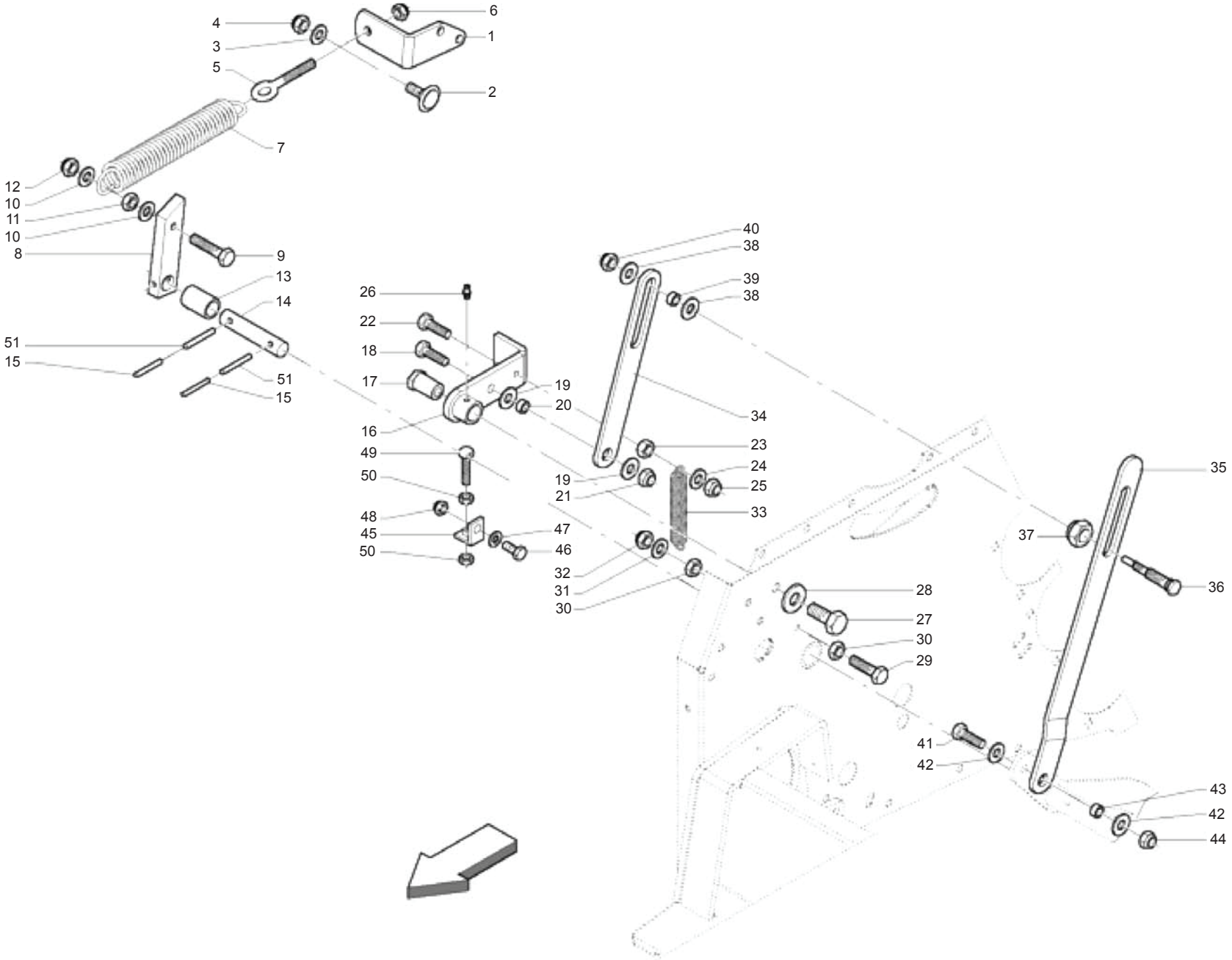

MASCHIO

cod. F07022338

LEGATORE RETE (PARTE 4)
NET BINDER (PART 4)

TAV_255

Pos.	Cod.	Descrizione	Description	Description	Benennung	Descripcion
1	B0C6P0045R	ATTACCO MOLLA SGANCIO	SPRING ATTACK RELEASE			CONEXI N MUELLE DESENGANCHE
2	B005C0003R	VITE TTQST 12X45-8.8 TORNITA	SCREW TTQST 12X45-8.8			TORNILLO TTQST 12X45-8.8 TORN
3	F01410076R	ROS.M12 13X 24X2,5 U6592 ZN	WASHER 12 13X 24X2,5 U6592 ZN	RONDEL. M12 13X24X2,5 U6592 ZN	SCHEIBE M12 13X24X2,5 U6592 ZN	ARAND.M12 13X 24X2,5 U6592 ZN
4	F01230213R	DADO M12X1,75 U7474 CL8 ZN	NUT M12X1,75 U7474 6SZN	ECROU AUTOBL. M12	SELBSTSPERR.MUTTER M12	TUERCA M12X1,75 U7474 CL8 ZN
5	B00545168R	OCCHIOLO PER TENDITORI M12-DX	EYELET M12	OEIL M12	OSE M12	OJAL PARA TENSORES M12-DER
6	F01230213R	DADO M12X1,75 U7474 CL8 ZN	NUT M12X1,75 U7474 6SZN	ECROU AUTOBL. M12	SELBSTSPERR.MUTTER M12	TUERCA M12X1,75 U7474 CL8 ZN
7	B01822744R	MOLLA 49,5 SPIRE	SPRING 49,5 SPIRAL	RESSORT	FEDER	MUELLE 49,5 SPIRE
8	B0C002073R	SGANCIO LAMA FFPRO	BLADE UNLOCK	DECROCHET LAME	KLINGENAUSLOSER	DESENGANCHE CUCHILLA FFPRO
9	F01020519R	VITE M12X1,75X 60 U5739 8.8ZN	SCREW M12X1,75X 60 U5739 8.8ZN			TORNILLO M12X1,75X 60 U5739 8
10	F01410076R	ROS.M12 13X 24X2,5 U6592 ZN	WASHER 12 13X 24X2,5 U6592 ZN	RONDEL. M12 13X24X2,5 U6592 ZN	SCHEIBE M12 13X24X2,5 U6592 ZN	ARAND.M12 13X 24X2,5 U6592 ZN
11	F01200293R	DADO M12X1,75 U5588 CL8 ZN	NUT M12X1,75 U5588 6S ZN	ECROU M12X1,75 U5588 6S ZN	MUTTER M12X1,75 U5588 6S ZN	TUERCA M12X1,75 U5588 CL8 ZN
12	F01230213R	DADO M12X1,75 U7474 CL8 ZN	NUT M12X1,75 U7474 6SZN	ECROU AUTOBL. M12	SELBSTSPERR.MUTTER M12	TUERCA M12X1,75 U7474 CL8 ZN
13	B02526852R	BUSSOLA NYLON	NYLON BUSH	GALET	BUCHSE	CASQUILLO DE NAILON
14	B01301055R	SPINA TAGLIA RETE LATO COM.	PIN	GOUPILLE	STECKSTIFT	CLAVIJA CORTA RED LADO COM.
15	F02100090R	SPINA E.P. 5X 40 U6873 C70 BR	ELASTIC PIN 5X40	GOUJON ELASTIQUE 5X40	SPANNHUELSE 5X40	CLAVIJA EL.P. 5X 40 U6873 C70
16	B07T00026R	SGANCIO	RELEASE	DECROCHAGE	AUSLOESUNG	DESENGANCHE
17	B00500093R	PERNO FILETTATO	THREADED PIN	PIVOT FILETE	GEWINDEBOLZEN	PERNO ROSCADO
18	F01020514R	VITE M12X1,75X40 U5739 8.8ZN	SCR. M12X1,75X40 U5739 8.8ZN	VIS M12X1,75X40 U5739 8.8ZN	SCHRA. M12X1,75X40 U5739 8.8ZN	TORNILLO M12X1,75X40 U5739 8.
19	F01420120R	ROS.M12 13X36X2,5 U6593 ZN	WASHER M12 13X36X2,5 U6593 ZN	RONDELLE M12 13X36X2,5 ZN		ARAND.M12 13X36X2,5 U6593 ZN
20	B01300463R	BUSSOLA 12.5X20X10	BUSH	DOUILLE	KOMPASS	CASQUILLO 12.5X20X10
21	F01230213R	DADO M12X1,75 U7474 CL8 ZN	NUT M12X1,75 U7474 6SZN	ECROU AUTOBL. M12	SELBSTSPERR.MUTTER M12	TUERCA M12X1,75 U7474 CL8 ZN
22	F01020445R	VITE M8X1,25X30 U5739 8.8ZN	SCR. M8X1,25X30 U5739 8.8ZN	VIS M 8X1,25X30 U5739 8.8 ZN	SCHRAU, M8X1,25X30 U5739 8.8ZN	TORNILLO M8X1,25X30 U5739 8.8
23	F01200244R	DADO M8X1,25 U5588 CL8 ZN	NUT M8X1,25 U5588 6.8ZN	ECROU M8 X1,25 U5588 6.8 ZN	MUTTER M8 X1,25 U5588 6.8 ZN	TUERCA M8X1,25 U5588 CL8 ZN
24	F01410051R	ROS.M8 8,4X 17X1,6 U6592 ZN	WASHER M8 8,4X17X1,6 U6592 ZN	RONDELLE M8 8,4X17X1,6 ZN	SCHEIBE M8 8,4X17X1,6 U6592 ZN	ARAND.M8 8,4X 17X1,6 U6592 ZN
25	B00920208R	DADO AUTOB.BASSO M 8-5S D985	NUT M8X1 D985 8ZN	ECROU	SELBSTSICHERNDE MUTTER M8-5S	TUERCA M8X1 D985 8
26	B04200610R	INGRASS.A SFERE M6X1 LUNGO	GREASE NIPPLE	GRAISSEUR HYDRAULIQUE	GERADER SCHMIERNIPPEL M6X1	ENGRASADOR DE ESFERAS M6X1
27	F01020562R	VITE M16X2X30 U5739 8.8ZN	SCR. M16X2X30 U5739 8.8ZN	VIS M16X2X30 U5739 8.8 ZN	SCHRAUBE M16X2X30 U5739 8.8 ZN	TORNILLO M16X2X30 U5739 8.8ZN
28	B01519319R	RALLA 16X38X5	FIFTH WHEEL	BUTEE	SCREIBE	RANGUA 16X38X5
29	F01020440R	VITE M8X1,25X25 U5739 8.8ZN	SCR. M8X1,25X25 U5739 8.8ZN	VIS M8X1,25X25 U5739 8.8 ZN	SCHRAUBE M8X1,25X25U5739 8.8ZN	TORNILLO M8X1,25X25 U5739 8.8
30	F01200244R	DADO M8X1,25 U5588 CL8 ZN	NUT M8X1,25 U5588 6.8ZN	ECROU M8 X1,25 U5588 6.8 ZN	MUTTER M8 X1,25 U5588 6.8 ZN	TUERCA M8X1,25 U5588 CL8 ZN
31	F01410051R	ROS.M8 8,4X 17X1,6 U6592 ZN	WASHER M8 8,4X17X1,6 U6592 ZN	RONDELLE M8 8,4X17X1,6 ZN	SCHEIBE M8 8,4X17X1,6 U6592 ZN	ARAND.M8 8,4X 17X1,6 U6592 ZN
32	B00920208R	DADO AUTOB.BASSO M 8-5S D985	NUT M8X1 D985 8ZN	ECROU	SELBSTSICHERNDE MUTTER M8-5S	TUERCA M8X1 D985 8
33	B01800025R	MOLLA 2 13 98T GRUPPO RETE	SPRING	RESSORT	FEDER	MUELLE 2 13 98T GRUPO RED
34	B0C002081R	LEVA SGANCIO LAMA	BLADE UNLOCK LEVER	LEVIER DECROCHET LAME	KLINGENAUSLOESERHEBEL	PALANCA DESENGANCHE DE CUCH
35	B0C2P0150R	COLLEGAMENTO LAMA	CONNECTION	CONNEXION	KLINGEKUPPLUNG	CONEXI N DE LA CUCHILLA
36	B01301103R	PERNO CARICA LAMA	BLADE PIN	TOURILLON LAME	ZAPFEN	PERNO CARGAR CUCHILLA
37	B00920516R	DADO M16X 1,5 D985 6S ZN	NUT M16X1,5 D985 6S ZN	ECROU	SELBSTSICHERNDE MUTTER M16-5S	TUERCA M16X 1,5 D985 6S
38	F01420120R	ROS.M12 13X36X2,5 U6593 ZN	WASHER M12 13X36X2,5 U6593 ZN	RONDELLE M12 13X36X2,5 ZN		ARAND.M12 13X36X2,5 U6593 ZN
39	B01300463R	BUSSOLA 12.5X20X10	BUSH	DOUILLE	KOMPASS	CASQUILLO 12.5X20X10
40	F01230213R	DADO M12X1,75 U7474 CL8 ZN	NUT M12X1,75 U7474 6SZN	ECROU AUTOBL. M12	SELBSTSPERR.MUTTER M12	TUERCA M12X1,75 U7474 CL8 ZN
41	F01020512R	VITE M12X1,75X35 U5739 8.8ZN	SCR. M12X1,75X35 U5739 8.8ZN	VIS M12X1,75X35 5739 8.8 ZN	SCHR. M12X1,75X35 5739 8.8 ZN	TORNILLO M12X1,75X35 U5739 8
42	F01420120R	ROS.M12 13X36X2,5 U6593 ZN	WASHER M12 13X36X2,5 U6593 ZN	RONDELLE M12 13X36X2,5 ZN		ARAND.M12 13X36X2,5 U6593 ZN
43	B01300463R	BUSSOLA 12.5X20X10	BUSH	DOUILLE	KOMPASS	CASQUILLO 12.5X20X10
44	F01230213R	DADO M12X1,75 U7474 CL8 ZN	NUT M12X1,75 U7474 6SZN	ECROU AUTOBL. M12	SELBSTSPERR.MUTTER M12	TUERCA M12X1,75 U7474 CL8 ZN
45	B0C000053R	FERMO COLT.	KNIVES STOP	ARRET COUTEAUX	MESSERANSCHLAG	TOPE DE CUCH.
46	F01020510R	VITE M12X1,75X30 U5739 8.8ZN	SCR. M12X1,75X30 U5739 8.8ZN	VIS M12X1,75X30 U5739 8.8ZN	SCHRAU.M12X1,75X30 U5739 8.8ZN	TORNILLO M12X1,75X30 U5739
47	F01410076R	ROS.M12 13X 24X2,5 U6592 ZN	WASHER 12 13X 24X2,5 U6592 ZN	RONDEL. M12 13X24X2,5 U6592 ZN	SCHEIBE M12 13X24X2,5 U6592 ZN	ARAND.M12 13X 24X2,5 U6592 ZN
48	F01230213R	DADO M12X1,75 U7474 CL8 ZN	NUT M12X1,75 U7474 6SZN	ECROU AUTOBL. M12	SELBSTSPERR.MUTTER M12	TUERCA M12X1,75 U7474 CL8 ZN
49	F01020487R	VITE M10X1,5X60 U5739 8.8ZN	SCR. M10X1,5X60 U5739 8.8ZN	VIS 10X60 5739 8.G ZN	SCHRAUBE 10X60 5739 8.G ZN	TORNILLO M10X1,5X60 U5739 8.8
50	F01200270R	DADO M10X1,5 U5588 CL8 ZN	NUT M10X1,5 U5588 6.8ZN	ECROU M10X 1,5 U5588 6.8 ZN	MUTTER M10X 1,5 U5588 6.8 ZN	TUERCA M10X1,5 U5588 CL8 ZN
51	F02100142R	SPINA E.P. 8X 40 U6873 C70 BR	ELASTIC PIN 8X40	GOUJON ELASTIQUE 8X40	SPANNHUELSE 8X40	CLAVIJA EL.P. 8X 40 U6873 C70

TAV_260

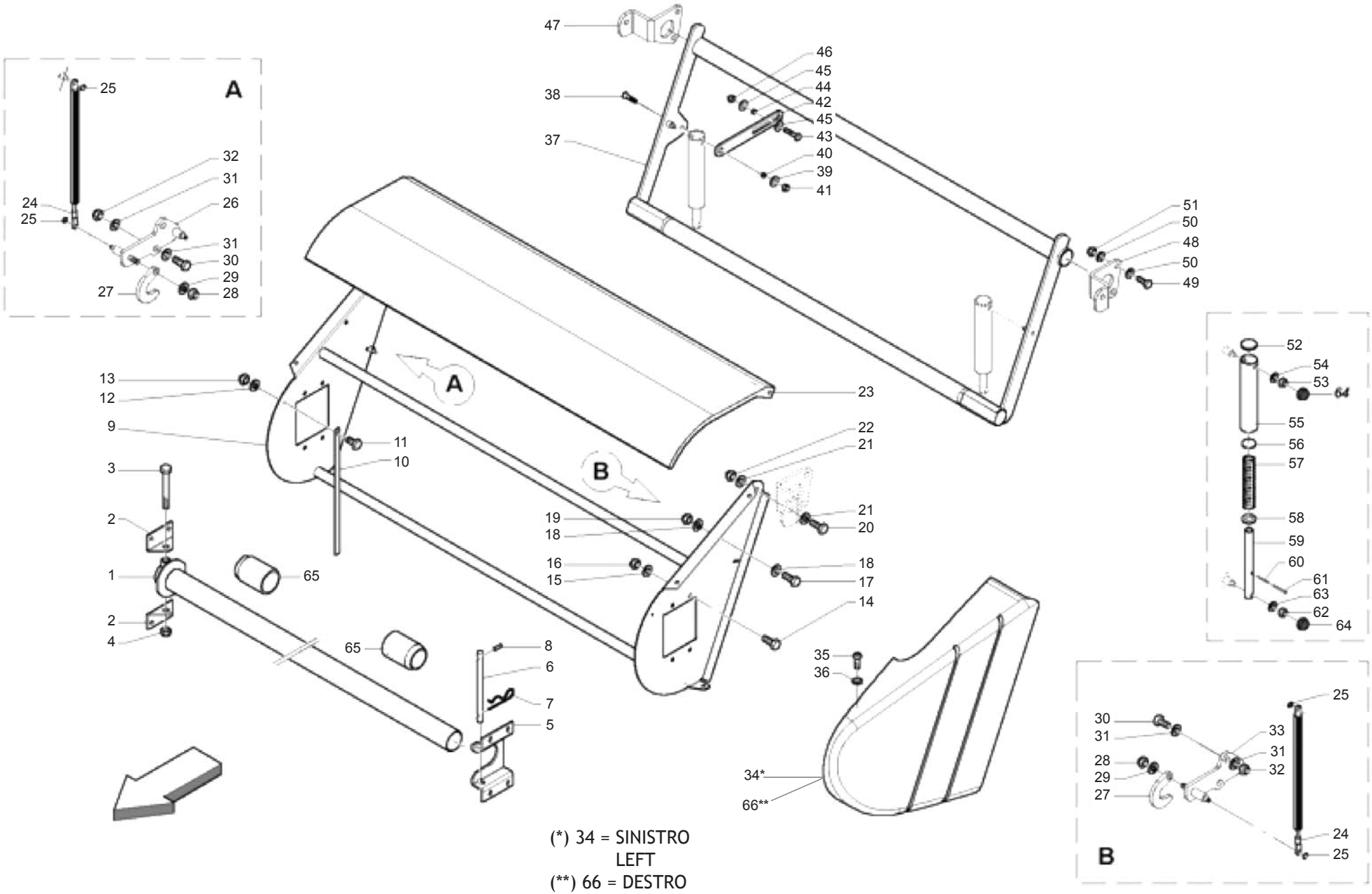

(*) 34 = SINISTRO
LEFT
(**) 66 = DESTRO
RIGHT

LEGATORE RETE (PARTE 5)
NET BINDER (PART 5)

TAV_260

Pos.	Cod.	Descrizione	Description	Description	Benennung	Descripcion
1	B07SP0240R	TUBO PORTA ROTOLO	ROLL CARRYING TUBE	TUYAU PORTE-ROULEAU	ROHR ROLLEHALTER	TUBO PORTA ROLLO
2	B0C100035R	ATTACCO FULCRO	FULCRUM ATTACHMENT	ATTELAGE POINT D APPUI	SCHWENKPUNKTBEFESTIGUNG	CONEXI N DEL FULCRO
3	F01020268R	VITE M16X2X130 U5737 8.8ZN	SCR. M16X2X130 U5737 8.8ZN	VIS M16X2X130 U5737 8.8 ZN	SCHRA. M16X2X130 U5737 8.8 ZN	TORNILLO M16X2X130 U5737 8.8Z
4	B00920516R	DADO M16X 1,5 D985 6S ZN	NUT M16X1,5 D985 6S ZN	ECROU	SELBSTSICHERNDE MUTTER M16-5S	TUERCA M16X 1,5 D985 6S
5	B0C100036R	ALLOGGIAMENTO TUBO	TUBE SEAT	LOGEMENT TUBE	ROHRSITZ	ALOJAMIENTO PARA TUBO
6	B01300373R	SPINA FERMO TUBO PORTA ROTOLO	PIPE PIN	EPINE ARRET	ARRETIERBOLZEN FUER NETZROLLEN	CLAVIJA TOPE DEL TUBO PORTA R
7	F02200363R	COPIGLIA R 3X 62 ZN	SPRING SPLIT PIN 3X 62 ZN	GOUPILLE R 3X62	SPLINT R 3X62	PASADOR R 3X 62
8	F02100066R	SPINA EL.4 X36 DIN 1481	PIN EL. 4X 36 U6873 C70 BR			CLAVIJA EL.4 X36 DIN 1481
9	B07T00001R	CASSONE RETE	NET STORAGE BOX	RESERVE FILET	NETZROLLENKASTEN	CAJ N DE RED
10	B0C005257R	SOSTEGNO COPERCHIO	COVER SUPPORT	SUPPORT COUVERCLE	DECKELHALTER	SOPORTE DE LA TAPA
11	B00180620R	VITE M6X1X20 U5739 8.8ZN	SCREW	VIS	SCHRAUBE	TORNILLO M6X1X20 U5739 8
12	F01410037R	ROS.M6 6,4X12,5X1,6 U6592 ZN	WASHER M6 6,4X12,5X1,6 U6592ZN	RONDEL.M6 6,4X12,5X1,6 U6592ZN	SCHEIB.M6 6,4X12,5X1,6 U6592ZN	ARAND.M6 6,4X12,5X1,6 U6592 ZN
13	F01230184R	DADO M6X1 D985 8ZN	NUT M6X1 D985 8ZN			TUERCA M6X1 D985 8
14	F01020472R	VITE M10X1,5X25 U5739 8.8ZN	SCR. M10X1,5X25 U5739 8.8ZN	VIS M10X1,5X25 U5739 8.8 ZN	SCHRAUBE M10X1,5X25 U5739 8.8	TORNILLO M10X1,5X25 U5739 8.8
15	F01410062R	ROS.M10 10,5X 18X 2 U6592 ZN	WASHER M10 10,5X 18X 2 U6592	RONDELLE M10 10,5X18X2 ZN	DICHTUNGSRING M10 10,5X18X2 ZN	ARAND.M10 10,5X 18X 2 U6592 ZN
16	F01230202R	DADO M10X 1,5 D985 8 ZN	NUT M10 D985	ECROU AUTOBL. M10	SELBSTSPERR.MUTTER M10	TUERCA M10X 1,5 D985 8
17	F01020476R	VITE M10X1,5X30 U5739 8.8ZN	SCR. M10X1,5X30 U5739 8.8ZN	VIS M10X1,5X30 U5739 8.8 ZN	SCHRAUBE M10X1,5X30U5739 8.8ZN	TORNILLO M10X1,5X30 U5739 8.8
18	F01410062R	ROS.M10 10,5X 18X 2 U6592 ZN	WASHER M10 10,5X 18X 2 U6592	RONDELLE M10 10,5X18X2 ZN	DICHTUNGSRING M10 10,5X18X2 ZN	ARAND.M10 10,5X 18X 2 U6592 ZN
19	F01230202R	DADO M10X 1,5 D985 8 ZN	NUT M10 D985	ECROU AUTOBL. M10	SELBSTSPERR.MUTTER M10	TUERCA M10X 1,5 D985 8
20	F01020476R	VITE M10X1,5X30 U5739 8.8ZN	SCR. M10X1,5X30 U5739 8.8ZN	VIS M10X1,5X30 U5739 8.8 ZN	SCHRAUBE M10X1,5X30U5739 8.8ZN	TORNILLO M10X1,5X30 U5739 8.8
21	F01410062R	ROS.M10 10,5X 18X 2 U6592 ZN	WASHER M10 10,5X 18X 2 U6592	RONDELLE M10 10,5X18X2 ZN	DICHTUNGSRING M10 10,5X18X2 ZN	ARAND.M10 10,5X 18X 2 U6592 ZN
22	F01230202R	DADO M10X 1,5 D985 8 ZN	NUT M10 D985	ECROU AUTOBL. M10	SELBSTSPERR.MUTTER M10	TUERCA M10X 1,5 D985 8
23	B07T00005R	COPERCHIO	CAP	COUVERCLE	DECKEL	TAPA
24	B0H100001R	MOLLA A GAS PER RETE L500-750N	GAS SPRING FOR NET L=500-750N	RESSORT GAS POUR FILET L=500-6	GAS GETRIEBENE FEDER L=500-750	MUELLE DE GAS PARA RED L500-75
25	B01700008R	ANEL. D ARR. ALB. 8-E UNI3653	SEEGER RING	BAGUE SEEGER	SEEGERRING E 8	ANIL. DE PARAD. RB. 8-E UNI3
26	B07T00011R	ATTACCO FRENO DX	RIGHT BRAKE ATTACHMENT	ATTELAGE FREIN DROIT	RECHTE BREMSHALTERUNG	CONEXI N DEL FRENO DER
27	B0C004911R	GANCIO	HOOK			GANCHO
28	F01230202R	DADO M10X 1,5 D985 8 ZN	NUT M10 D985	ECROU AUTOBL. M10	SELBSTSPERR.MUTTER M10	TUERCA M10X 1,5 D985 8
29	F01410062R	ROS.M10 10,5X 18X 2 U6592 ZN	WASHER M10 10,5X 18X 2 U6592	RONDELLE M10 10,5X18X2 ZN	DICHTUNGSRING M10 10,5X18X2 ZN	ARAND.M10 10,5X 18X 2 U6592 ZN
30	F01020510R	VITE M12X1,75X30 U5739 8.8ZN	SCR. M12X1,75X30 U5739 8.8ZN	VIS M12X1,75X30 U5739 8.8ZN	SCHRAU.M12X1,75X30 U5739 8.8ZN	TORNILLO M12X1,75X30 U5739
31	F01410076R	ROS.M12 13X 24X2,5 U6592 ZN	WASHER 12 13X 24X2,5 U6592 ZN	RONDEL. M12 13X24X2,5 U6592 ZN	SCHEIBE M12 13X24X2,5 U6592 ZN	ARAND.M12 13X 24X2,5 U6592 ZN
32	F01230213R	DADO M12X1,75 U7474 CL8 ZN	NUT M12X1,75 U7474 6SZN	ECROU AUTOBL. M12	SELBSTSPERR.MUTTER M12	TUERCA M12X1,75 U7474 CL8 ZN
33	B07T00010R	ATTACCO FRENO SX	LEFT BRAKE ATTACHMENT	ATTELAGE FREIN GAUCHE	LINKE BREMSHALTERUNG	CONEXI N DEL FRENO IZQ
34	B07V00110R	BOX RETE SX	LEFT NET BOX	BOITE FILET GAUCHE	LINKER NETZKASTEN	CAJA RED IZQ
35	B004N0820R	VITE NERA TTEI M 8X 20-10,9	SCREW	VIS	SCHRAUBE TTEI M 8X20-10,9	TORNILLO NEGRO CAB.ALLEN CON
36	B07V00119R	RONDELLA SOTTOVITE HD 8,5X24X2	WASHER HD 8,5X24X2	RONDELLE	STIFT	ARANDELA BAJO TORNILLO HD 8,5
37	B07T00012R	BRACCIO FRENA RETE	NET BRAKE ARM	BRAS FREINAGE FILET	NETZBREMSENARM	BRAZO FRENA RED
38	F01030111R	VITE M12X1,75X40 U5933 10.9ZD	SCR. M12X1,75X40 U5933 10.9ZD	VIS 12X40 5933 8.8 ZN	SCHRAUBE 12X40 5933 8.8 ZN	TORNILLO M12X1,75X40 U5933 10.
39	F01420120R	ROS.M12 13X36X2,5 U6593 ZN	WASHER M12 13X36X2,5 U6593 ZN	RONDELLE M12 13X36X2,5 ZN		ARAND.M12 13X36X2,5 U6593 ZN
40	B01300463R	BUSSOLA 12.5X20X10	BUSH	DOUILLE	KOMPASS	CASQUILLO 12.5X20X10
41	F01230213R	DADO M12X1,75 U7474 CL8 ZN	NUT M12X1,75 U7474 6SZN	ECROU AUTOBL. M12	SELBSTSPERR.MUTTER M12	TUERCA M12X1,75 U7474 CL8 ZN
42	B0C100051R	COLLEGAMENTO FRENO	BRAKE CONNECTON	CONNEXION FREIN	BREMSENKUPPLUNG	CONEXI N DEL FRENO
43	F01020519R	VITE M12X1,75X 60 U5739 8.8ZN	SCREW M12X1,75X 60 U5739 8.8ZN			TORNILLO M12X1,75X 60 U5739 8
44	B01300463R	BUSSOLA 12.5X20X10	BUSH	DOUILLE	KOMPASS	CASQUILLO 12.5X20X10
45	F01420120R	ROS.M12 13X36X2,5 U6593 ZN	WASHER M12 13X36X2,5 U6593 ZN	RONDELLE M12 13X36X2,5 ZN		ARAND.M12 13X36X2,5 U6593 ZN
46	F01230213R	DADO M12X1,75 U7474 CL8 ZN	NUT M12X1,75 U7474 6SZN	ECROU AUTOBL. M12	SELBSTSPERR.MUTTER M12	TUERCA M12X1,75 U7474 CL8 ZN
47	B0C100047R	FULCRO FRENO CASSONE DX	BRAKE FULCRUM RIGHT BOX	POINT D APPUI FREIN BOITE DR	BREMSENSCHENKPUNKT RECHTES GEH	FULCRO FRENO CAJ N DER
48	B0C100048R	FULCRO FRENO CASSONE SX	BRAKE FULCRUM LEFT BOX	POINT D APPUI FREIN BOITE GA	BREMSENSCHENKPUNKT LINKES GEHA	FULCRO FRENO CAJ N IZQ
49	F01020508R	VITE M12X1,75X25 U5739 8.8ZN	SCR. M12X1,75X25 U5739 8.8ZN	VIS M12X1,75X25 U5739 8.8 ZN	SCHRAUBE M12X1,75X25U57398.8ZN	TORNILLO M12X1,75X25 U5739
50	F01410076R	ROS.M12 13X 24X2,5 U6592 ZN	WASHER 12 13X 24X2,5 U6592 ZN	RONDEL. M12 13X24X2,5 U6592 ZN	SCHEIBE M12 13X24X2,5 U6592 ZN	ARAND.M12 13X 24X2,5 U6592 ZN
51	F01230213R	DADO M12X1,75 U7474 CL8 ZN	NUT M12X1,75 U7474 6SZN	ECROU AUTOBL. M12	SELBSTSPERR.MUTTER M12	TUERCA M12X1,75 U7474 CL8 ZN
52	B07V00118R	TAPPO COPRITUBO 45 X 1-3 01IL	COVER PIPE			TAP N DE COBERTURA TUBO 45 X 1
53	F01230213R	DADO M12X1,75 U7474 CL8 ZN	NUT M12X1,75 U7474 6SZN	ECROU AUTOBL. M12	SELBSTSPERR.MUTTER M12	TUERCA M12X1,75 U7474 CL8 ZN
54	F01410076R	ROS.M12 13X 24X2,5 U6592 ZN	WASHER 12 13X 24X2,5 U6592 ZN	RONDEL. M12 13X24X2,5 U6592 ZN	SCHEIBE M12 13X24X2,5 U6592 ZN	ARAND.M12 13X 24X2,5 U6592 ZN
55	B01301079R	GUIDA ESTERNA	EXTERNAL GUIDE	GUIDE EXTERIEURE	AEUSSERE FUEHRUNG	GU A EXTERNA
56	B01301081R	DISCO 36X5	DISC 36X5	DISQUE 36X5	SCHEIBE 36X5	DISCO 36X5
57	B01800046R	MOLLA 6 30 180C	SPRING	RESSORT	FEDER	MUELLE 6 30 180C

TAV_260

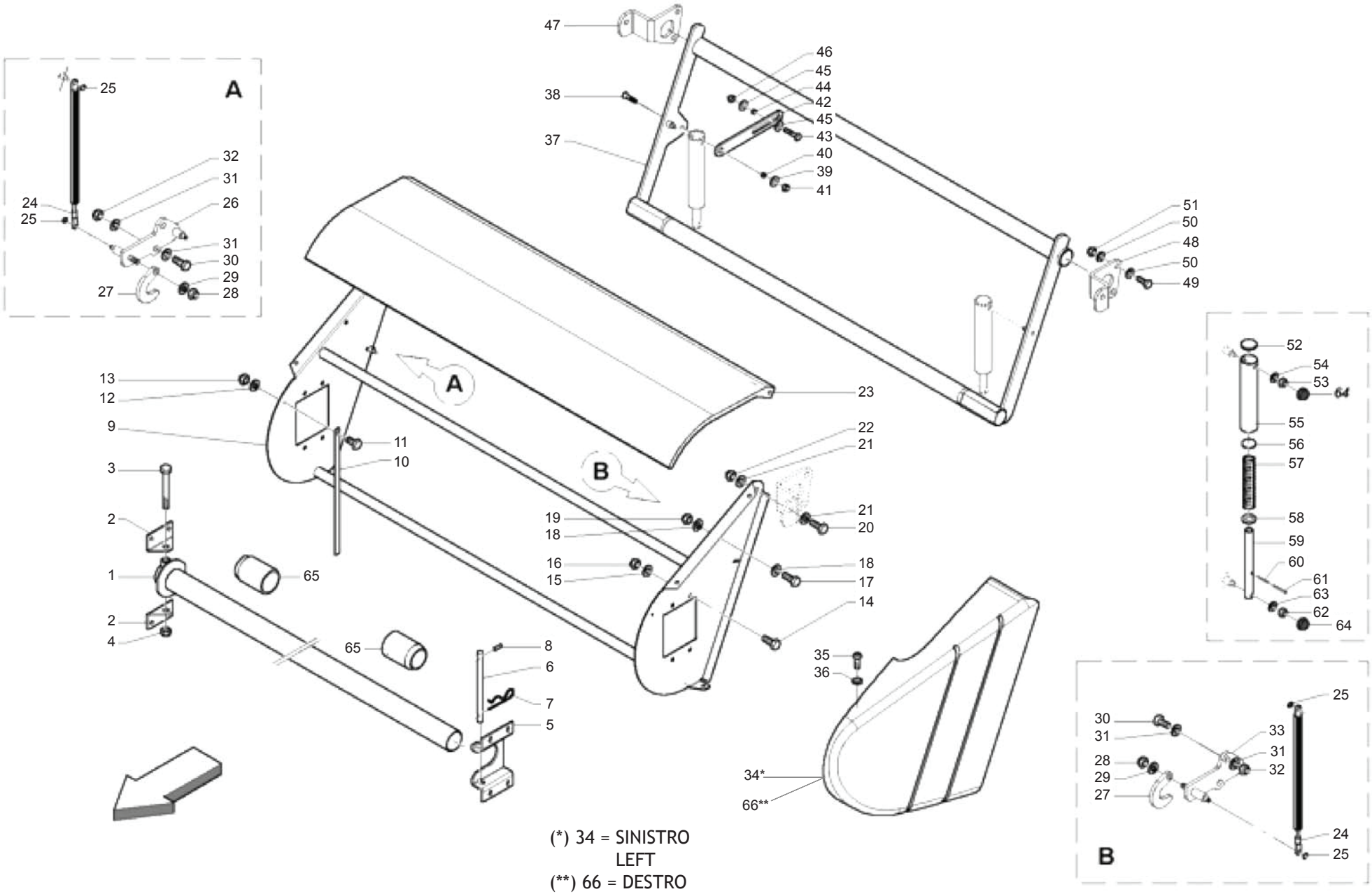

(*) 34 = SINISTRO
LEFT
(**) 66 = DESTRO
RIGHT

LEGATORE RETE (PARTE 5)
NET BINDER (PART 5)

TAV_260

Pos.	Cod.	Descrizione	Description	Description	Benennung	Descripcion
58	B01301082R	RALLA 22 36 5	FIFTH WHEEL	BUTEE	DISTANZSCHEIBE 22 36 5	RANGUA 22 36 5
59	B01301078R	GUIDA INFERIORE	LOWER GUIDE	GUIDE INFERIEURE	UNTERE FUEHRUNG	GU A INFERIOR
60	B01110535R	SPINA ELAST. 5X 36 SS DIN 1481	PIN	GOUPILLE	STIFT	CLAVIJA EL ST. 5X 36 SS DIN 14
61	B01110835R	SPINA ELAST. 8X 35 SS DIN 1481	PIN	GOUPILLE	STIFT	CLAVIJA EL ST. 8X 35 SS DIN 14
62	F01230213R	DADO M12X1,75 U7474 CL8 ZN	NUT M12X1,75 U7474 6SZN	ECROU AUTOBL. M12	SELBSTSPERR.MUTTER M12	TUERCA M12X1,75 U7474 CL8 ZN
63	F01410076R	ROS.M12 13X 24X2,5 U6592 ZN	WASHER 12 13X 24X2,5 U6592 ZN	RONDEL. M12 13X24X2,5 U6592 ZN	SCHEIBE M12 13X24X2,5 U6592 ZN	ARAND.M12 13X 24X2,5 U6592 ZN
64	B07VC0016R	CAP. PROT. DADO M12	GUARD CAP	CHAPEAU DE PROTECTION	SCHUTZDECKEL	CAP. PROT. TUERCA M12
65	B025P0011R	TAMPONE ROTOLO RETE	BUSH FOR NET ROLL	BAGUES	SCHLEGEL	TAP N ROLLO DE RED
66	B07V00111R	BOX RETE DX	RIGHT NET BOX	BOITE FILET DROIT	RECHTE NETZROLLENGEHAEUSE	CAJA RED DER

TAV_265

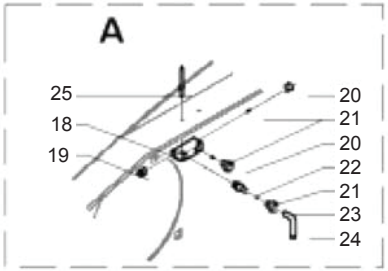
A
25
18
19
20
21
20
22
21
23
24

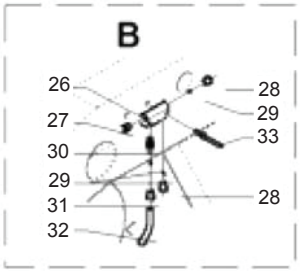
B
26
27
30
29
31
32
28
29
33
28

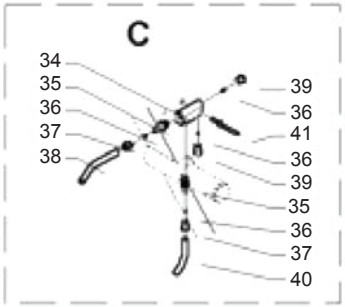
C
34
35
36
37
38
39
36
41
36
39
35
36
37
40

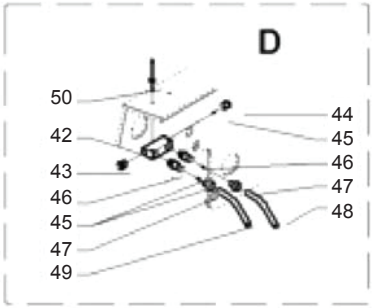
D
50
42
43
46
45
47
49
44
45
46
47
48

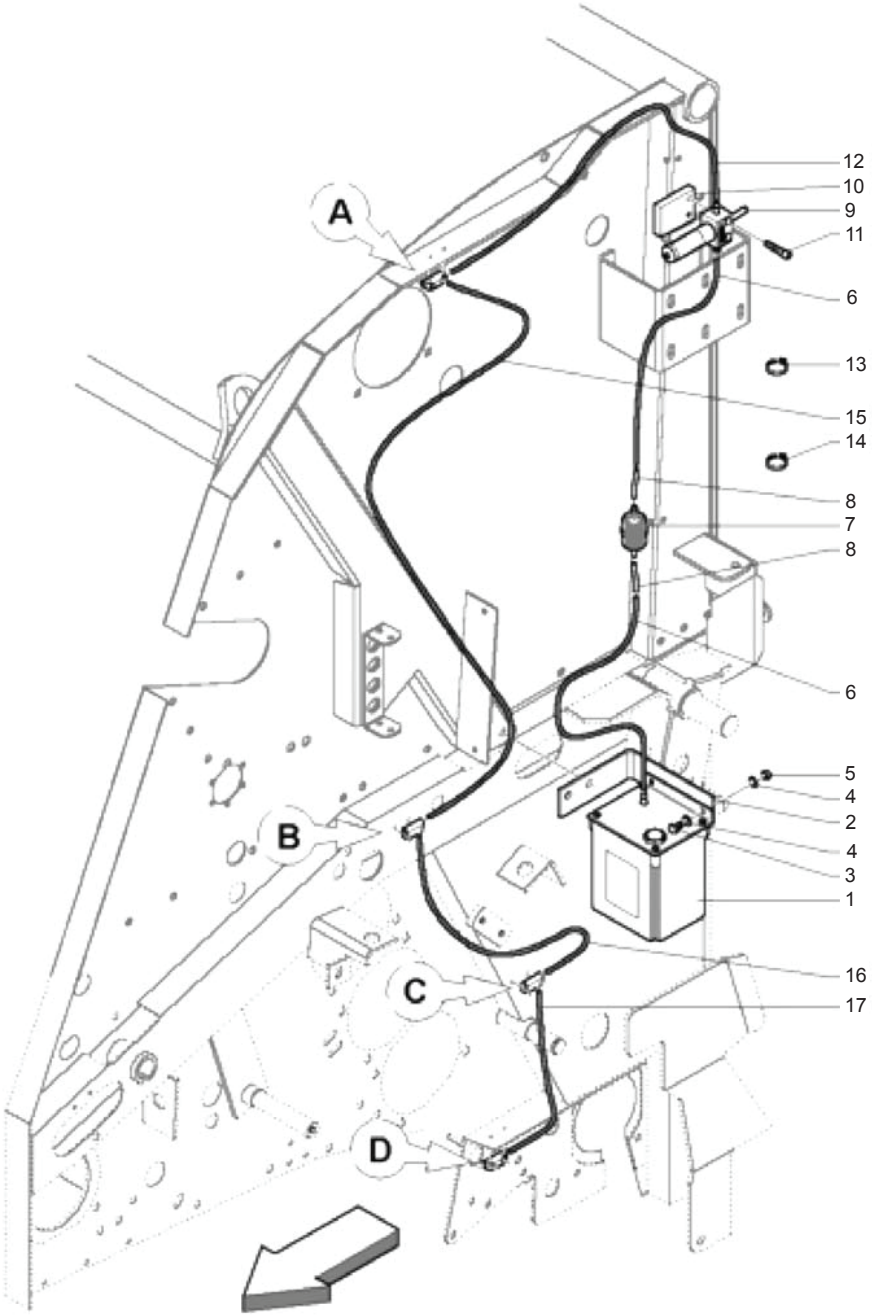
A
B
C
D
12
10
9
11
6
13
15
14
8
7
8
6
5
4
2
4
3
1
16
17

IMPIANTO OLIATURA AUTOMATICA
AUTOMATIC OILING SYSTEM

TAV_265

Pos.	Cod.	Descrizione	Description	Description	Benennung	Descripcion
1	B04800000R	SERB.NYLON PER POMPA PISTONERI	NYLON TANK PUMP PISTONERI	RESERVOIR	OELBEHAELTER	DEP S.NAILON PARA BOMBA DE RE
2	B0C004684R	ATTACCO SERBATOIO	TANK ATTACHMENT	ATTELAGE RESERVOIR	OLTANKBEFESTIGUNG	CONEXI N DEL DEP SITO
3	B00180620R	VITE M6X1X20 U5739 8.8ZN	SCREW	VIS	SCHRAUBE	TORNILLO M6X1X20 U5739 8
4	F01410037R	ROS.M6 6,4X12,5X1,6 U6592 ZN	WASHER M6 6,4X12,5X1,6 U6592ZN	RONDEL.M6 6,4X12,5X1,6 U6592ZN	SCHEIB.M6 6,4X12,5X1,6 U6592ZN	ARAND.M6 6,4X12,5X1,6 U6592 ZN
5	F01230184R	DADO M6X1 D985 8ZN	NUT M6X1 D985 8ZN			TUERCA M6X1 D985 8
6	B0H000239R	TUBETTO IN NYLON 6 L=500	NYLON HOSE	TUYAU EN NYLON DIAM 6 L=500	NYLON ROEHRCHEN	TUBO DE NAILON 6 L=500
7	B0H000022R	FILTRO BENZINA MAXIFISPINO	FILTER MAXIFIS	FILTRE ESSENCE	BENZINFILTER MAXIFIS	FILTRO DE LA GASOLINA MAXIFISP
8	B0H000023R	TUBETTO COLLEGAMENTO FILTRO	CONNECTION PIPE	PETIT TUBE JONCTION FILTRE	VERBINDUNGSSCHLAUCH	TUBO DE CONEXI N DEL FILTRO
9	B0H400007R	POMPA PIST PORT.6CCX10MM CORSA	PISTON PUMPT	POMPE PISTON	KOLBENPUMPE	BOMBA DE PIST PORT.6CCX10MM
10	B0C003928R	ATTACCO OLIATORE	LUBRICATION ATTACHMENT	ATTELAGE GRAISSEUR	SCHMIERVORRICHTUNGSBEFESTIGUNG	CONEXI N ACEITADOR
11	B00400850R	VITE M8X1,25X50 U5931 8.8BR	SCREW	VIS	SCHRAUBE M8X50.8.8	TORNILLO M8X1,25X50 U5931 8
12	B0H000132R	TUBETTO IN NYLON 4 L=750	NYLON PIPE 4 L=750	PETIT TUYAU EN NYLON DIAM 4 L=	KLEINE ROEHRE AUS NYLON J4 L=7	TUBO DE NAILON 4 L=750
13	F05150055R	FASCETTA POLYA. 3,6X200 NERA	WHITE BAND	BANDE BIANCHE	WEIBE BAND	BANDA POLYA. 3,6X200 NEGRA
14	B0E600026R	FASCETTA 10,4X 10,7 CE09 NORMA	CLAMP 8,8X9,3 HLS A HILLS	BANDE 8,8X9,3	MANSCHETTE 8,8X9,3 HLS A HILLS	ABRAZADERA 10,4X 10,7 CE09 NOR
15	B0H000240R	TUBETTO IN NYLON 4 L=1200	NYLON HOSE	TUYAU EN NYLON DIAM 4 L=1200	NYLON ROEHRCHEN	TUBO DE NAILON 4 L=1200
16	B0H000134R	TUBETTO IN NYLON 4 L=650	NYLON PIPE 4 L=550	PETIT TUYAU EN NYLON DIAM 4 L=	NYLONROEHRCHEN 4 L=550	TUBO DE NAILON 4 L=650
17	B0H000133R	TUBETTO IN NYLON 4 L=420	NYLON PIPE 4 L=420	PETIT TUYAU EN NYLON DIAM 4 L=	NYLONROEHRCHEN 4 L=420	TUBO DE NAILON 4 L=420
18	B0H000102R	DISTRIBUTORE UNILAT. 4 VIE	UNILATERAL DISTRIBUTOR	DISTRIBUTEUR UNILATERAL 4 VOIE	EINSEITIGER VERTEILER	DISTRIBUIDOR UNILAT. 4 V AS
19	B0H600015R	TAPPORIF.ILC 05.001.0	PLUG	BOUCHON	STOEPSEL	TAP REF.ILC 05.001.0
20	B0H600016R	RACC. X TUBO 4RIF.ILC 04.102.	UNION FOR PIPE 4RI	RACCORD POUR TUYAU DIAM 4	VERBINDUNGSTUECK FUR SCHLAUCH	EMP. X TUBO 4REF.ILC 04.102.
21	B0H600013R	DOPPI CONI PER TUBO 4	DOUBLE CONE FOR PIPE	DOUBLE CONES POUR TUYAU 4	DOPPELTER KEGEL FUER SCHLAUCH	DOBLES CONOS PARA TUBO 4
22	B0HE00003R	INIETTORE TIPO E	TYPE E INJECTOR	GICLEUR TYPE E	SPRITZDUESE	INYECTOR TIPO E
23	B0H600014R	RACCORDO INIETTORE PER TUBO 4	INJECTOR UNION FOR PIPE	RACCORD INJECTEUR POUR TUYAU D	EINSPRITZDUESENANSCHLUSS	RACOR INYECTOR PARA TUBO 4
24	B0H000128R	TUBETTO IN RAME 4 L=120	COPPER PIPE 4 L=1	PETIT TUYAU EN CUIVRE DIAM. 4	KUPFER ROEHRCHEN 04 L=1	TUBO DE COBRE 4 L=120
25	B01000012R	RIVETTO STR. 6,4X22 ACCIAIO	RIVET	RIVET	ABREISSNIETEN 6X26	REMACHE EXTR. 6,4X22 ACERO
26	B0H000102R	DISTRIBUTORE UNILAT. 4 VIE	UNILATERAL DISTRIBUTOR	DISTRIBUTEUR UNILATERAL 4 VOIE	EINSEITIGER VERTEILER	DISTRIBUIDOR UNILAT. 4 V AS
27	B0H600015R	TAPPORIF.ILC 05.001.0	PLUG	BOUCHON	STOEPSEL	TAP REF.ILC 05.001.0
28	B0H600016R	RACC. X TUBO 4RIF.ILC 04.102.	UNION FOR PIPE 4RI	RACCORD POUR TUYAU DIAM 4	VERBINDUNGSTUECK FUR SCHLAUCH	EMP. X TUBO 4REF.ILC 04.102.
29	B0H600013R	DOPPI CONI PER TUBO 4	DOUBLE CONE FOR PIPE	DOUBLE CONES POUR TUYAU 4	DOPPELTER KEGEL FUER SCHLAUCH	DOBLES CONOS PARA TUBO 4
30	B0HE00003R	INIETTORE TIPO E	TYPE E INJECTOR	GICLEUR TYPE E	SPRITZDUESE	INYECTOR TIPO E
31	B0H600014R	RACCORDO INIETTORE PER TUBO 4	INJECTOR UNION FOR PIPE	RACCORD INJECTEUR POUR TUYAU D	EINSPRITZDUESENANSCHLUSS	RACOR INYECTOR PARA TUBO 4
32	B0H000129R	TUBETTO IN RAME 4 L=90	COPPER PIPE 4 L=9	PETIT TUYAU EN CUIVRE DIAM. 4	KUPFER ROEHRCHEN 4 L=9	TUBO DE COBRE 4 L=90
33	B01000012R	RIVETTO STR. 6,4X22 ACCIAIO	RIVET	RIVET	ABREISSNIETEN 6X26	REMACHE EXTR. 6,4X22 ACERO
34	B0H000102R	DISTRIBUTORE UNILAT. 4 VIE	UNILATERAL DISTRIBUTOR	DISTRIBUTEUR UNILATERAL 4 VOIE	EINSEITIGER VERTEILER	DISTRIBUIDOR UNILAT. 4 V AS
35	B0HE00003R	INIETTORE TIPO E	TYPE E INJECTOR	GICLEUR TYPE E	SPRITZDUESE	INYECTOR TIPO E
36	B0H600013R	DOPPI CONI PER TUBO 4	DOUBLE CONE FOR PIPE	DOUBLE CONES POUR TUYAU 4	DOPPELTER KEGEL FUER SCHLAUCH	DOBLES CONOS PARA TUBO 4
37	B0H600014R	RACCORDO INIETTORE PER TUBO 4	INJECTOR UNION FOR PIPE	RACCORD INJECTEUR POUR TUYAU D	EINSPRITZDUESENANSCHLUSS	RACOR INYECTOR PARA TUBO 4
38	B0H000128R	TUBETTO IN RAME 4 L=120	COPPER PIPE 4 L=1	PETIT TUYAU EN CUIVRE DIAM. 4	KUPFER ROEHRCHEN 04 L=1	TUBO DE COBRE 4 L=120
39	B0H600016R	RACC. X TUBO 4RIF.ILC 04.102.	UNION FOR PIPE 4RI	RACCORD POUR TUYAU DIAM 4	VERBINDUNGSTUECK FUR SCHLAUCH	EMP. X TUBO 4REF.ILC 04.102.
40	B0H000129R	TUBETTO IN RAME 4 L=90	COPPER PIPE 4 L=9	PETIT TUYAU EN CUIVRE DIAM. 4	KUPFER ROEHRCHEN 4 L=9	TUBO DE COBRE 4 L=90
41	B01000012R	RIVETTO STR. 6,4X22 ACCIAIO	RIVET	RIVET	ABREISSNIETEN 6X26	REMACHE EXTR. 6,4X22 ACERO
42	B0H000102R	DISTRIBUTORE UNILAT. 4 VIE	UNILATERAL DISTRIBUTOR	DISTRIBUTEUR UNILATERAL 4 VOIE	EINSEITIGER VERTEILER	DISTRIBUIDOR UNILAT. 4 V AS
43	B0H600015R	TAPPORIF.ILC 05.001.0	PLUG	BOUCHON	STOEPSEL	TAP REF.ILC 05.001.0
44	B0H600016R	RACC. X TUBO 4RIF.ILC 04.102.	UNION FOR PIPE 4RI	RACCORD POUR TUYAU DIAM 4	VERBINDUNGSTUECK FUR SCHLAUCH	EMP. X TUBO 4REF.ILC 04.102.
45	B0H600013R	DOPPI CONI PER TUBO 4	DOUBLE CONE FOR PIPE	DOUBLE CONES POUR TUYAU 4	DOPPELTER KEGEL FUER SCHLAUCH	DOBLES CONOS PARA TUBO 4
46	B0HE00003R	INIETTORE TIPO E	TYPE E INJECTOR	GICLEUR TYPE E	SPRITZDUESE	INYECTOR TIPO E
47	B0H600014R	RACCORDO INIETTORE PER TUBO 4	INJECTOR UNION FOR PIPE	RACCORD INJECTEUR POUR TUYAU D	EINSPRITZDUESENANSCHLUSS	RACOR INYECTOR PARA TUBO 4
48	B0H000129R	TUBETTO IN RAME 4 L=90	COPPER PIPE 4 L=9	PETIT TUYAU EN CUIVRE DIAM. 4	KUPFER ROEHRCHEN 4 L=9	TUBO DE COBRE 4 L=90
49	B0H000131R	TUBETTO IN RAME 4 L=190	COPPER PIPE 4 L=1	PETIT TUYAU EN CUIVRE DIAM 4 L	KUPFER ROEHRCHEN 4 L=1	TUBO DE COBRE 4 L=190
50	B01000012R	RIVETTO STR. 6,4X22 ACCIAIO	RIVET	RIVET	ABREISSNIETEN 6X26	REMACHE EXTR. 6,4X22 ACERO

TAV_270

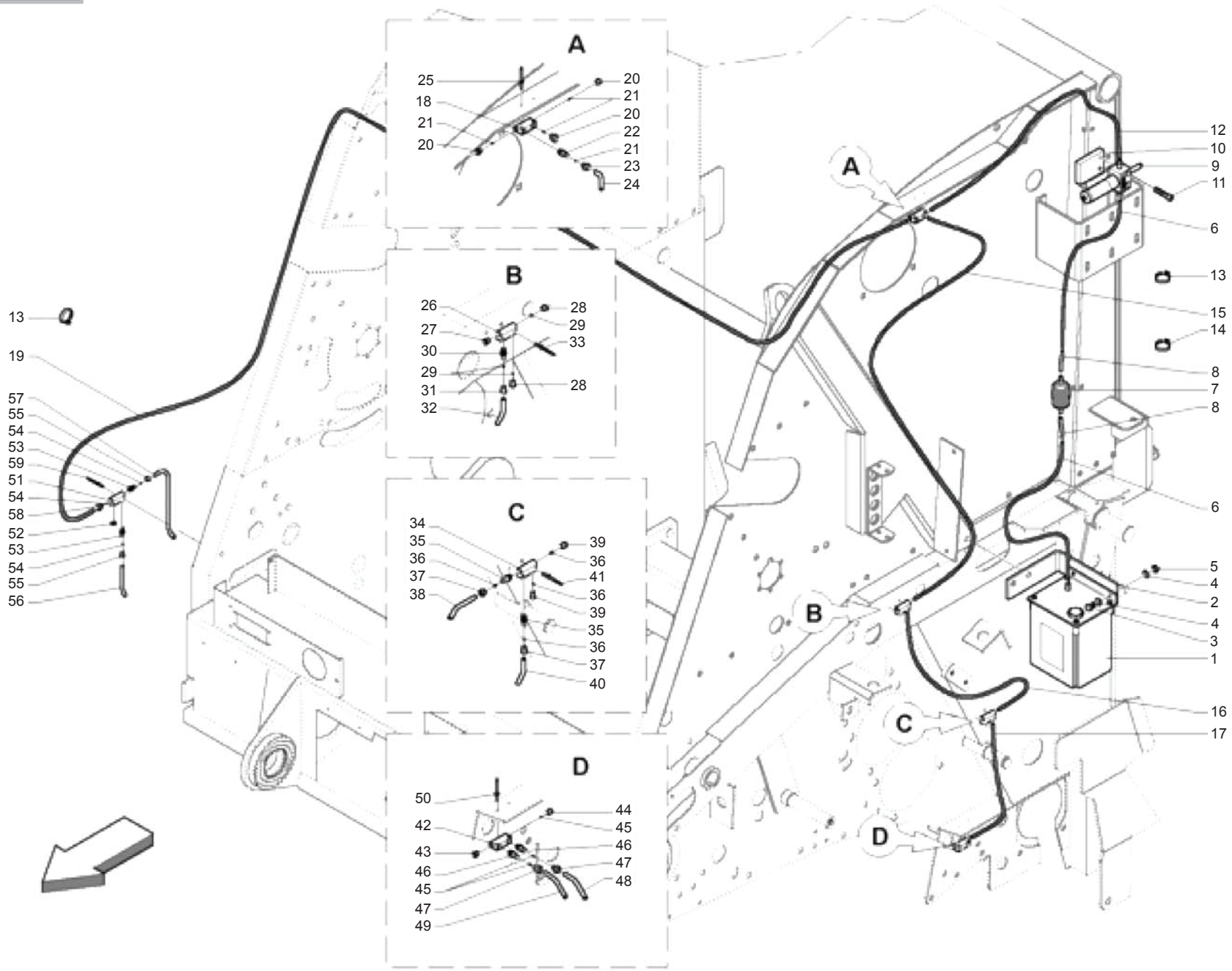

MASCHIO

IMPIANTO OLIATURA AUTOMATICA CUT
AUTOMATIC OILING CUT SYSTEM

TAV_270

Pos.	Cod.	Descrizione	Description	Description	Benennung	Descripcion
1	B04800000R	SERB.NYLON PER POMPA PISTONERI	NYLON TANK PUMP PISTONERI	RESERVOIR	OELBEHAELTER	DEP S.NAILON PARA BOMBA DE RE
2	B0C004684R	ATTACCO SERBATOIO	TANK ATTACHMENT	ATTELAGE RESERVOIR	OLTANKBEFESTIGUNG	CONEXI N DEL DEP SITO
3	B00180620R	VITE M6X1X20 U5739 8.8ZN	SCREW	VIS	SCHRAUBE	TORNILLO M6X1X20 U5739 8
4	F01410037R	ROS.M6 6,4X12,5X1,6 U6592 ZN	WASHER M6 6,4X12,5X1,6 U6592ZN	RONDEL.M6 6,4X12,5X1,6 U6592ZN	SCHEIB.M6 6,4X12,5X1,6 U6592ZN	ARAND.M6 6,4X12,5X1,6 U6592 ZN
5	F01230184R	DADO M6X1 D985 8ZN	NUT M6X1 D985 8ZN			TUERCA M6X1 D985 8
6	B0H000239R	TUBETTO IN NYLON 6 L=500	NYLON HOSE	TUYAU EN NYLON DIAM 6 L=500	NYLON ROEHRCHEN	TUBO DE NAILON 6 L=500
7	B0H000022R	FILTRO BENZINA MAXIFISPINO	FILTER MAXIFIS	FILTRE ESSENCE	BENZINFILTER MAXIFIS	FILTRO DE LA GASOLINA MAXIFISP
8	B0H000023R	TUBETTO COLLEGAMENTO FILTRO	CONNECTION PIPE	PETIT TUBE JONCTION FILTRE	VERBINDUNGSSCHLAUCH	TUBO DE CONEXI N DEL FILTRO
9	B0H400007R	POMPA PIST PORT.6CCX10MM CORSA	PISTON PUMPT	POMPE PISTON	KOLBENPUMPE	BOMBA DE PIST PORT.6CCX10MM
10	B0C003928R	ATTACCO OLIATORE	LUBRICATION ATTACHMENT	ATTELAGE GRAISSEUR	SCHMIERVORRICHTUNGSBEFESTIGUNG	CONEXI N ACEITADOR
11	B00400850R	VITE M8X1,25X50 U5931 8.8BR	SCREW	VIS	SCHRAUBE M8X50.8.8	TORNILLO M8X1,25X50 U5931 8
12	B0H000132R	TUBETTO IN NYLON 4 L=750	NYLON PIPE 4 L=750	PETIT TUYAU EN NYLON DIAM 4 L=	KLEINE ROEHRE AUS NYLON J4 L=7	TUBO DE NAILON 4 L=750
13	F05150055R	FASCETTA POLYA. 3,6X200 NERA	WHITE BAND	BANDE BIANCHE	WEIBE BAND	BANDA POLYA. 3,6X200 NEGRA
14	B0E600026R	FASCETTA 10,4X 10,7 CE09 NORMA	CLAMP 8,8X9,3 HLS A HILLS	BANDE 8,8X9,3	MANSCHETTE 8,8X9,3 HLS A HILLS	ABRAZADERA 10,4X 10,7 CE09 NOR
15	B0H000240R	TUBETTO IN NYLON 4 L=1200	NYLON HOSE	TUYAU EN NYLON DIAM 4 L=1200	NYLON ROEHRCHEN	TUBO DE NAILON 4 L=1200
16	B0H000134R	TUBETTO IN NYLON 4 L=650	NYLON PIPE 4 L=550	PETIT TUYAU EN NYLON DIAM 4 L=	NYLONROEHRCHEN 4 L=550	TUBO DE NAILON 4 L=650
17	B0H000133R	TUBETTO IN NYLON 4 L=420	NYLON PIPE 4 L=420	PETIT TUYAU EN NYLON DIAM 4 L=	NYLONROEHRCHEN 4 L=420	TUBO DE NAILON 4 L=420
18	B0H000102R	DISTRIBUTORE UNILAT. 4 VIE	UNILATERAL DISTRIBUTOR	DISTRIBUTEUR UNILATERAL 4 VOIE	EINSEITIGER VERTEILER	DISTRIBUIDOR UNILAT. 4 V AS
19	B0H000241R	TUBETTO IN NYLON 4 L=2500	NYLON HOSE	TUYAU EN NYLON DIAM 4 L=2500	NYLON ROEHRCHEN	TUBO DE NAILON 4 L=2500
20	B0H600016R	RACC. X TUBO 4RIF.ILC 04.102.	UNION FOR PIPE 4RI	RACCORD POUR TUYAU DIAM 4	VERBINDUNGSTUECK FUR SCHLAUCH	EMP. X TUBO 4REF.ILC 04.102.
21	B0H600013R	DOPPI CONI PER TUBO 4	DOUBLE CONE FOR PIPE	DOUBLE CONES POUR TUYAU 4	DOPPELTER KEGEL FUER SCHLAUCH	DOBLES CONOS PARA TUBO 4
22	B0HE00003R	INIETTORE TIPO E	TYPE E INJECTOR	GICLEUR TYPE E	SPRITZDUESE	INYECTOR TIPO E
23	B0H600014R	RACCORDO INIETTORE PER TUBO 4	INJECTOR UNION FOR PIPE	RACCORD INJECTEUR POUR TUYAU D	EINSPRITZDUESENANSCHLUSS	RACOR INYECTOR PARA TUBO 4
24	B0H000128R	TUBETTO IN RAME 4 L=120	COPPER PIPE 4 L=1	PETIT TUYAU EN CUIVRE DIAM. 4	KUPFER ROEHRCHEN 04 L=1	TUBO DE COBRE 4 L=120
25	B01000012R	RIVETTO STR. 6,4X22 ACCIAIO	RIVET	RIVET	ABREISSNIETEN 6X26	REMACHE EXTR. 6,4X22 ACERO
26	B0H000102R	DISTRIBUTORE UNILAT. 4 VIE	UNILATERAL DISTRIBUTOR	DISTRIBUTEUR UNILATERAL 4 VOIE	EINSEITIGER VERTEILER	DISTRIBUIDOR UNILAT. 4 V AS
27	B0H600015R	TAPPORIF.ILC 05.001.0	PLUG	BOUCHON	STOEPSEL	TAP REF.ILC 05.001.0
28	B0H600016R	RACC. X TUBO 4RIF.ILC 04.102.	UNION FOR PIPE 4RI	RACCORD POUR TUYAU DIAM 4	VERBINDUNGSTUECK FUR SCHLAUCH	EMP. X TUBO 4REF.ILC 04.102.
29	B0H600013R	DOPPI CONI PER TUBO 4	DOUBLE CONE FOR PIPE	DOUBLE CONES POUR TUYAU 4	DOPPELTER KEGEL FUER SCHLAUCH	DOBLES CONOS PARA TUBO 4
30	B0HE00003R	INIETTORE TIPO E	TYPE E INJECTOR	GICLEUR TYPE E	SPRITZDUESE	INYECTOR TIPO E
31	B0H600014R	RACCORDO INIETTORE PER TUBO 4	INJECTOR UNION FOR PIPE	RACCORD INJECTEUR POUR TUYAU D	EINSPRITZDUESENANSCHLUSS	RACOR INYECTOR PARA TUBO 4
32	B0H000129R	TUBETTO IN RAME 4 L=90	COPPER PIPE 4 L=9	PETIT TUYAU EN CUIVRE DIAM. 4	KUPFER ROEHRCHEN 4 L=9	TUBO DE COBRE 4 L=90
33	B01000012R	RIVETTO STR. 6,4X22 ACCIAIO	RIVET	RIVET	ABREISSNIETEN 6X26	REMACHE EXTR. 6,4X22 ACERO
34	B0H000102R	DISTRIBUTORE UNILAT. 4 VIE	UNILATERAL DISTRIBUTOR	DISTRIBUTEUR UNILATERAL 4 VOIE	EINSEITIGER VERTEILER	DISTRIBUIDOR UNILAT. 4 V AS
35	B0HE00003R	INIETTORE TIPO E	TYPE E INJECTOR	GICLEUR TYPE E	SPRITZDUESE	INYECTOR TIPO E
36	B0H600013R	DOPPI CONI PER TUBO 4	DOUBLE CONE FOR PIPE	DOUBLE CONES POUR TUYAU 4	DOPPELTER KEGEL FUER SCHLAUCH	DOBLES CONOS PARA TUBO 4
37	B0H600014R	RACCORDO INIETTORE PER TUBO 4	INJECTOR UNION FOR PIPE	RACCORD INJECTEUR POUR TUYAU D	EINSPRITZDUESENANSCHLUSS	RACOR INYECTOR PARA TUBO 4
38	B0H000128R	TUBETTO IN RAME 4 L=120	COPPER PIPE 4 L=1	PETIT TUYAU EN CUIVRE DIAM. 4	KUPFER ROEHRCHEN 04 L=1	TUBO DE COBRE 4 L=120
39	B0H600016R	RACC. X TUBO 4RIF.ILC 04.102.	UNION FOR PIPE 4RI	RACCORD POUR TUYAU DIAM 4	VERBINDUNGSTUECK FUR SCHLAUCH	EMP. X TUBO 4REF.ILC 04.102.
40	B0H000129R	TUBETTO IN RAME 4 L=90	COPPER PIPE 4 L=9	PETIT TUYAU EN CUIVRE DIAM. 4	KUPFER ROEHRCHEN 4 L=9	TUBO DE COBRE 4 L=90
41	B01000012R	RIVETTO STR. 6,4X22 ACCIAIO	RIVET	RIVET	ABREISSNIETEN 6X26	REMACHE EXTR. 6,4X22 ACERO
42	B0H000102R	DISTRIBUTORE UNILAT. 4 VIE	UNILATERAL DISTRIBUTOR	DISTRIBUTEUR UNILATERAL 4 VOIE	EINSEITIGER VERTEILER	DISTRIBUIDOR UNILAT. 4 V AS
43	B0H600015R	TAPPORIF.ILC 05.001.0	PLUG	BOUCHON	STOEPSEL	TAP REF.ILC 05.001.0
44	B0H600016R	RACC. X TUBO 4RIF.ILC 04.102.	UNION FOR PIPE 4RI	RACCORD POUR TUYAU DIAM 4	VERBINDUNGSTUECK FUR SCHLAUCH	EMP. X TUBO 4REF.ILC 04.102.
45	B0H600013R	DOPPI CONI PER TUBO 4	DOUBLE CONE FOR PIPE	DOUBLE CONES POUR TUYAU 4	DOPPELTER KEGEL FUER SCHLAUCH	DOBLES CONOS PARA TUBO 4
46	B0HE00003R	INIETTORE TIPO E	TYPE E INJECTOR	GICLEUR TYPE E	SPRITZDUESE	INYECTOR TIPO E
47	B0H600014R	RACCORDO INIETTORE PER TUBO 4	INJECTOR UNION FOR PIPE	RACCORD INJECTEUR POUR TUYAU D	EINSPRITZDUESENANSCHLUSS	RACOR INYECTOR PARA TUBO 4
48	B0H000129R	TUBETTO IN RAME 4 L=90	COPPER PIPE 4 L=9	PETIT TUYAU EN CUIVRE DIAM. 4	KUPFER ROEHRCHEN 4 L=9	TUBO DE COBRE 4 L=90
49	B0H000131R	TUBETTO IN RAME 4 L=190	COPPER PIPE 4 L=1	PETIT TUYAU EN CUIVRE DIAM 4 L	KUPFER ROEHRCHEN 4 L=1	TUBO DE COBRE 4 L=190
50	B01000012R	RIVETTO STR. 6,4X22 ACCIAIO	RIVET	RIVET	ABREISSNIETEN 6X26	REMACHE EXTR. 6,4X22 ACERO
51	B0H000102R	DISTRIBUTORE UNILAT. 4 VIE	UNILATERAL DISTRIBUTOR	DISTRIBUTEUR UNILATERAL 4 VOIE	EINSEITIGER VERTEILER	DISTRIBUIDOR UNILAT. 4 V AS
52	B0H600015R	TAPPORIF.ILC 05.001.0	PLUG	BOUCHON	STOEPSEL	TAP REF.ILC 05.001.0
53	B0HE00003R	INIETTORE TIPO E	TYPE E INJECTOR	GICLEUR TYPE E	SPRITZDUESE	INYECTOR TIPO E
54	B0H600013R	DOPPI CONI PER TUBO 4	DOUBLE CONE FOR PIPE	DOUBLE CONES POUR TUYAU 4	DOPPELTER KEGEL FUER SCHLAUCH	DOBLES CONOS PARA TUBO 4
55	B0H600014R	RACCORDO INIETTORE PER TUBO 4	INJECTOR UNION FOR PIPE	RACCORD INJECTEUR POUR TUYAU D	EINSPRITZDUESENANSCHLUSS	RACOR INYECTOR PARA TUBO 4
56	B0H000128R	TUBETTO IN RAME 4 L=120	COPPER PIPE 4 L=1	PETIT TUYAU EN CUIVRE DIAM. 4	KUPFER ROEHRCHEN 04 L=1	TUBO DE COBRE 4 L=120
57	B0H000130R	TUBETTO IN RAME 4 L=150	COPPER PIPE 4 L=1	PETIT TUYAU EN CUIVRE DIAM 4 L	KUPFER ROEHRCHEN 4 L=1	TUBO DE COBRE 4 L=150

TAV_270

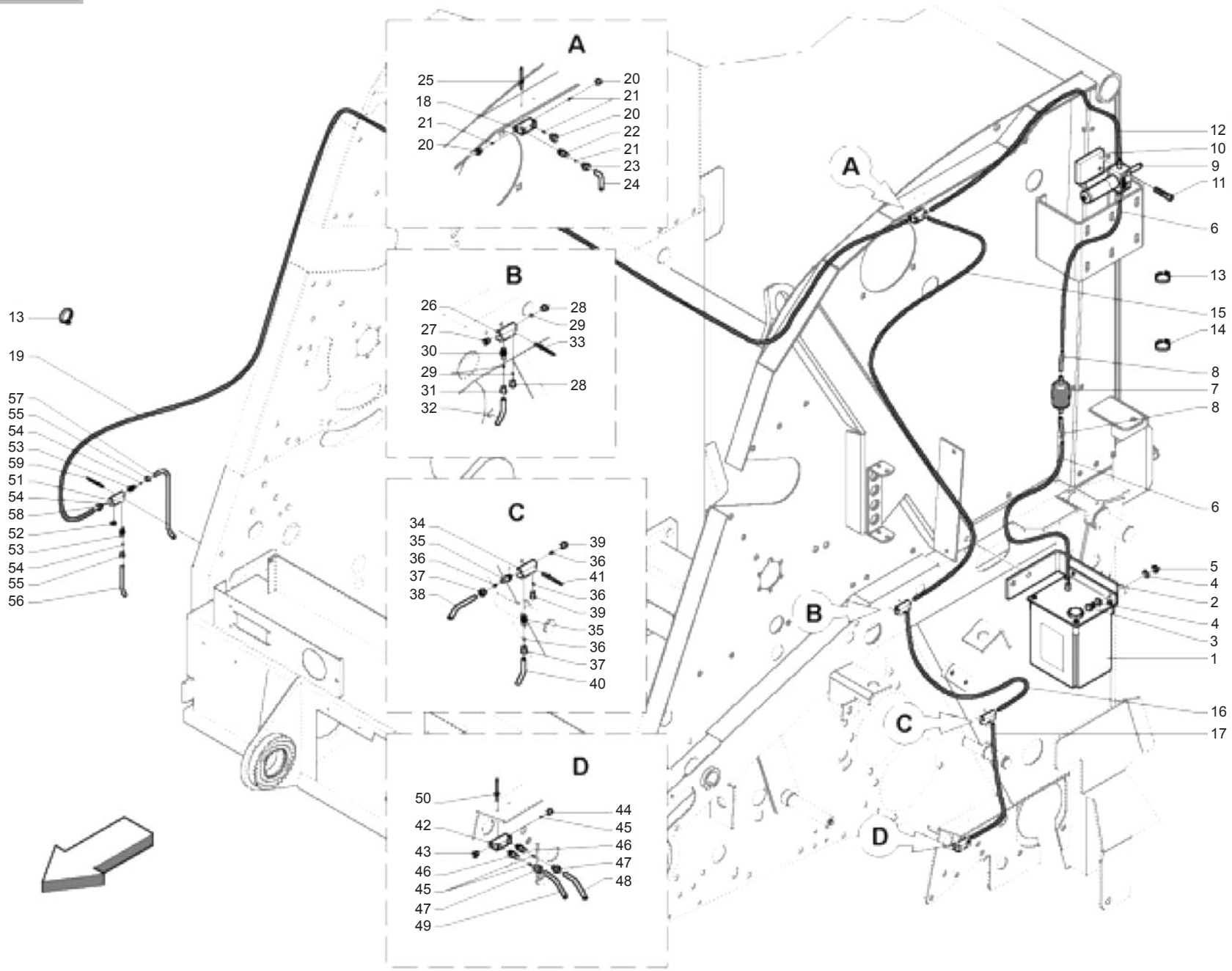

MASCHIO

IMPIANTO OLIATURA AUTOMATICA CUT
AUTOMATIC OILING CUT SYSTEM

Pos.	Cod.	Descrizione	Description	Description	Benennung	Descripcion
58	B0H600016R	RACC. X TUBO 4RIF.ILC 04.102.	UNION FOR PIPE 4RI	RACCORD POUR TUYAU DIAM 4	VERBINDUNGSTUECK FUR SCHLAUCH	EMP. X TUBO 4REF.ILC 04.102.
59	B01000012R	RIVETTO STR. 6,4X22 ACCIAIO	RIVET	RIVET	ABREISSNIETEN 6X26	REMACHE EXTR. 6,4X22 ACERO

TAV_275

(*) 17, 18 = SINISTRO
LEFT
(**) 51, 52 = DESTRO
RIGHT

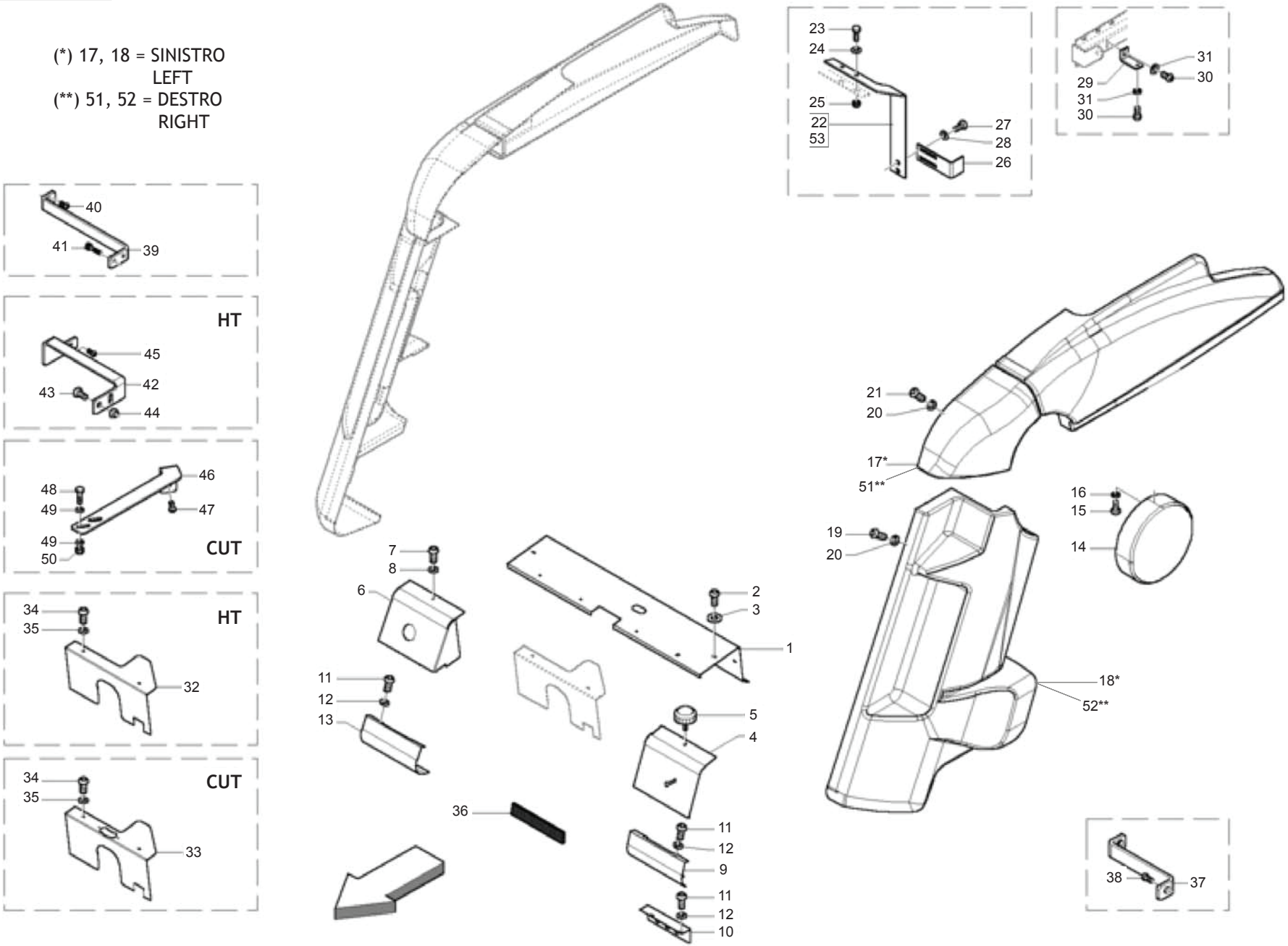

MASCHIO

cod. F07022338

CARTER ANTERIORI
FRONT CARTER

TAV_275

Pos.	Cod.	Descrizione	Description	Description	Benennung	Descripcion
1	B0C004454R	PROTEZIONE SUPERIORE	HIGHER PROTECTION	PROTECTION SUPERIEURE	SCHUETZ OBEN	PROTECCI N SUPERIOR
2	F01030208R	VITE M 8X1,25X 20 U7380 10.9ZN	SCREW M8X1,25X20 U7380 10.9ZN			TORNILLO M 8X1,25X 20 U7380 10
3	F01420048R	ROS.M8 8,4X 24X 2 U6593 ZN	WASHER M8 8,4X 24X2 U6593 ZN	RONDELLE M8 8,4X24X 2 U6593 ZN	SCHEIBEN M8 8,4X24X 2 U6593 ZN	ARAND.M8 8,4X 24X 2 U6593 ZN
4	B0C004632R	SPORTELLO	DOOR	GUICHET	TUER	PUERTA
5	B07V00106R	VOLANTINO M8X15 DIAM. 30	KNOB WHEEL	VOLAN M 8 DIAM. 30X19	HANDRAD	VOLANTE M8X15 DI M. 30
6	B0C004958R	SPORTELLO DX	RIGHT DOOR	GUICHET DROIT	FENSTER RECHTS	PUERTA DER
7	B00470815R	VITE TTEI M 8X 15-8.8 UNBRA	SCREW	VIS	SCHRAUBE VERZINKT TTEI M8X15 8	TORNILLO CAB.ALLEN CON HUECO
8	F01420048R	ROS.M8 8,4X 24X 2 U6593 ZN	WASHER M8 8,4X 24X2 U6593 ZN	RONDELLE M8 8,4X24X 2 U6593 ZN	SCHEIBEN M8 8,4X24X 2 U6593 ZN	ARAND.M8 8,4X 24X 2 U6593 ZN
9	B0C005254R	CHIUSURA INFERIORE SX	LEFT LOWER CLOSURE	FERMETURE INFERIEURE GAUCHE	VERSCHLUSS UNTEN	CIERRE INFERIOR IZQ
10	B0C004370R	TERMINALE CHIUSURA INF.SX	TERMINALE CHIUSURA INF.SX .			TERMINAL DE CIERRE INF.IZQ
11	B00470620R	VITE TTEI M 6X 20-8.8 UNBRA	SCREW	VIS	SCHRAUBE TTEI M6X20-10.9	TORNILLO CAB.ALLEN CON HUEC
12	F01410037R	ROS.M6 6,4X12,5X1,6 U6592 ZN	WASHER M6 6,4X12,5X1,6 U6592ZN	RONDEL.M6 6,4X12,5X1,6 U6592ZN	SCHEIB.M6 6,4X12,5X1,6 U6592ZN	ARAND.M6 6,4X12,5X1,6 U6592 ZN
13	B0C004622R	CHIUSURA INFERIORE DX	RIGHT LOWER CLOSURE	FERMETURE INFERIEURE DROITE	VERSCHLUSS RECHTS	CIERRE INFERIOR DER
14	B07V00104R	BOTTONE	BUTTON	BOUTON	KNOPF	BOT N
15	F01020380R	VITE M5X0,8X20 U5739 8.8ZN	SCR. M5X0,8X20 U5739 8.8ZN	VIS M5X0,8X20 U5739 8.8ZN	SCHRAUBE M5X0,8X20 U5739 8.8ZN	TORNILLO M5X0,8X20 U5739 8
16	F01420023R	ROS.M5 5,3X 15X1,5 U6593 ZN	WASHER M5 5,3X 15X1,5 U6593			ARAND.M5 5,3X 15X1,5 U6593
17	B07V00101R	CAPPELLO SX 265	LEFT CAP 265	CHAPEAU GAUCHE 265	DECKEL LINKS 265	CAPUCH N IZQ 265
18	B07V00103R	SPIGOLO ANT. SX	LEFT FRONT EDGE	COIN EN AVANT GAUCHE	VORDERE KANTE LINKS	ESQUINA ANT. IZQ.
19	B004N0825R	VITE NERA TTEI M 8X 25-10,9	SCREW	VIS	SCHRAUBE TCEI M 8X25	TORNILLO NEGRO CAB.ALLEN CON
20	B07V00119R	RONDELLA SOTTOVITE HD 8,5X24X2	WASHER HD 8,5X24X2	RONDELLE	STIFT	ARANDELA BAJO TORNILLO HD 8,5
21	B004N0820R	VITE NERA TTEI M 8X 20-10,9	SCREW	VIS	SCHRAUBE TTEI M 8X20-10,9	TORNILLO NEGRO CAB.ALLEN CON
22	B0C004424R	SOSTEGNO REGOLATORE SX	LEFT REGULATOR SUPPORT	SUPPORT REGULATEUR GAUCHE	EINSTELLERHALTER LINKS	SOPORTE REGULADOR IZQ
23	F01020063R	VITE M8X1,25X35 U5737 8.8ZN	SCR. M8X1,25X35 U5737 8.8ZN	VIS M8X1,25X35 U5737 8.8ZN	SCHRAU. M8X1,25X35 U5737 8.8ZN	TORNILLO M8X1,25X35 U5737 8.8
24	F01420048R	ROS.M8 8,4X 24X 2 U6593 ZN	WASHER M8 8,4X 24X2 U6593 ZN	RONDELLE M8 8,4X24X 2 U6593 ZN	SCHEIBEN M8 8,4X24X 2 U6593 ZN	ARAND.M8 8,4X 24X 2 U6593 ZN
25	B00920208R	DADO AUTOB.BASSO M 8-5S D985	NUT M8X1 D985 8ZN	ECROU	SELBSTSICHERNDE MUTTER M8-5S	TUERCA M8X1 D985 8
26	B0C004372R	REGOLATORE CARTER LATERALI	SIDE GUARD ADJUSTING DEVICE	REGLEUR CARTERS LATERAUX	EINSTELLER CARTER SEITEN	REGULADOR DEL C RTERES LATER
27	F01020445R	VITE M8X1,25X30 U5739 8.8ZN	SCR. M8X1,25X30 U5739 8.8ZN	VIS M 8X1,25X30 U5739 8.8 ZN	SCHRAU, M8X1,25X30 U5739 8.8ZN	TORNILLO M8X1,25X30 U5739 8.8
28	F01420048R	ROS.M8 8,4X 24X 2 U6593 ZN	WASHER M8 8,4X 24X2 U6593 ZN	RONDELLE M8 8,4X24X 2 U6593 ZN	SCHEIBEN M8 8,4X24X 2 U6593 ZN	ARAND.M8 8,4X 24X 2 U6593 ZN
29	B0C005196R	SOSTEGNO CARTER SUPERIORI	SUPPORT TOP CARTER			SOPORTE C RTERES SUPERIORES
30	B004N0820R	VITE NERA TTEI M 8X 20-10,9	SCREW	VIS	SCHRAUBE TTEI M 8X20-10,9	TORNILLO NEGRO CAB.ALLEN CON
H31	F01420048R	ROS.M8 8,4X 24X 2 U6593 ZN	WASHER M8 8,4X 24X2 U6593 ZN	RONDELLE M8 8,4X24X 2 U6593 ZN	SCHEIBEN M8 8,4X24X 2 U6593 ZN	ARAND.M8 8,4X 24X 2 U6593 ZN
32	B0C004952R	CARTER CENTRALE	CENTRAL GUARD	CARTER CENTRALE	ZENTRAL ABDECKPLATTE	C RTER CENTRAL
33	B0C004626R	CARTER CENTRALE CUT	CUT CENTRAL GUARD	CARTER CENTRAL CUT	CARTER ZENTRAL CUT	C RTER CENTRAL CUT
34	F01030211R	VITE M8X1,25X25 U7380 10.9ZD	SCR. M8X1,25X25 U7380 10.9ZD	VIS 8X25 U7380 10.9 ZN	SCHRAUBE 8X25 U7380 10.9 ZN	TORNILLO M8X1,25X25 U7380 10
35	F01420048R	ROS.M8 8,4X 24X 2 U6593 ZN	WASHER M8 8,4X 24X2 U6593 ZN	RONDELLE M8 8,4X24X 2 U6593 ZN	SCHEIBEN M8 8,4X24X 2 U6593 ZN	ARAND.M8 8,4X 24X 2 U6593 ZN
36	B07VP0011R	PROT. ASOLA	HOLE PROTECTION	PROTECTION FENTE	LOCHSCHUTZ	PROT. OJAL
37	B0C005203R	SOSTEGNO LAT. SX CARTER	GUARD LEFT SIDE SUPPORT	SUPPORT LATERAL GAUCHE CARTER	HALTER	SOPORTE LAT. IZQ C RTER
38	B004N0820R	VITE NERA TTEI M 8X 20-10,9	SCREW	VIS	SCHRAUBE TTEI M 8X20-10,9	TORNILLO NEGRO CAB.ALLEN CON
39	B0C005197R	SOSTEGNO LAT. DX CARTER	GUARD RIGHT SIDE SUPPORT	SUPPORT LATERAL DROIT CARTER	SEITENANSCHLUSS	SOPORTE LAT. DER C RTER
40	B004N0820R	VITE NERA TTEI M 8X 20-10,9	SCREW	VIS	SCHRAUBE TTEI M 8X20-10,9	TORNILLO NEGRO CAB.ALLEN CON
H41	B00370001R	VITE TE M 8X16 A SEZ.TRILOBATA	SCREW TRE M 8X16 SEZ TROUBLED	VIS	SCHRAUBE M 8X15	TORNILLO CHEX M 8X16 A SECC. T
42	B0C4P0003R	SOSTEGNO SPIGOLO INFERIORE DX	RIGHT LOWER EDGE SUPPORT	SUPPORT COIN INFERIEUR DROIT	KANTEHALTER	SOPORTE ESQUINA INFERIOR DER
43	B00181255R	VITE M12X 55-8.8 UNI 5739	SCREW	VIS	VERZINKTE SCHRAUBE	TORNILLO M12X 55-8.8 UNI 5739
44	F01230213R	DADO M12X1,75 U7474 CL8 ZN	NUT M12X1,75 U7474 6SZN	ECROU AUTOBL. M12	SELBSTSPERR.MUTTER M12	TUERCA M12X1,75 U7474 CL8 ZN
45	B004N0820R	VITE NERA TTEI M 8X 20-10,9	SCREW	VIS	SCHRAUBE TTEI M 8X20-10,9	TORNILLO NEGRO CAB.ALLEN CON
46	B0C4P0004R	SOSTEGNO SPIGOLO INFERIORE DX	CUT RIGHT LOWER EDGE SUPPORT			SOPORTE ESQUINA INFERIOR IZQ
47	B004N0820R	VITE NERA TTEI M 8X 20-10,9	SCREW	VIS	SCHRAUBE TTEI M 8X20-10,9	TORNILLO NEGRO CAB.ALLEN CON
48	F01020510R	VITE M12X1,75X30 U5739 8.8ZN	SCR. M12X1,75X30 U5739 8.8ZN	VIS M12X1,75X30 U5739 8.8ZN	SCHRAU.M12X1,75X30 U5739 8.8ZN	TORNILLO M12X1,75X30 U5739
49	F01410076R	ROS.M12 13X 24X2,5 U6592 ZN	WASHER 12 13X 24X2,5 U6592 ZN	RONDEL. M12 13X24X2,5 U6592 ZN	SCHEIBE M12 13X24X2,5 U6592 ZN	ARAND.M12 13X 24X2,5 U6592 ZN
50	F01230213R	DADO M12X1,75 U7474 CL8 ZN	NUT M12X1,75 U7474 6SZN	ECROU AUTOBL. M12	SELBSTSPERR.MUTTER M12	TUERCA M12X1,75 U7474 CL8 ZN
51	B07V00100R	CAPPELLO DX 265	RIGHT CAP 265	CHAPEAU DROIT 265	DECKEL RECHTS 265	CAPUCH N DER 265
52	B07V00102R	SPIGOLO ANT. DX	RIGHT FRONT EDGE	COIN EN AVANT DROIT	VORDERE KANTE RECHTS	ESQUINA ANT. DER.
53	B0C004425R	SOSTEGNO REGOLATORE DX	RIGHT REGULATOR SUPPORT	SUPPORT REGULATEUR DROIT	EINSTELLERHALTER RECHTS	SOPORTE REGULADOR DER

TAV_280

(*) 1, 8, 13, 43, 47, 52, 53, 59 = SINISTRO
LEFT
(**) 61, 62, 63, 64, 65, 66, 67, 68 = DESTRO
RIGHT

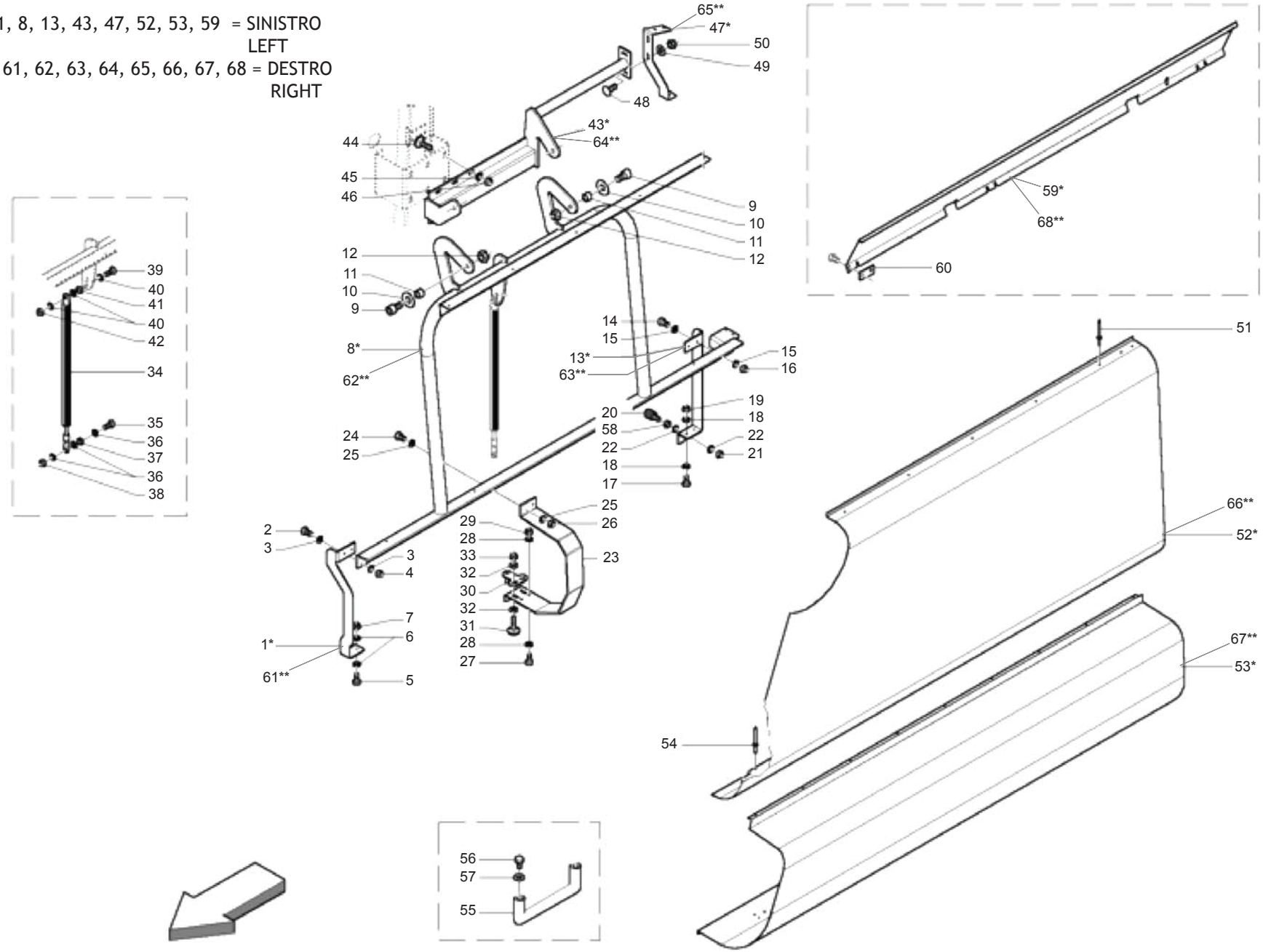

CARTER LATERALI
SIDE CARTER

TAV_280

Pos.	Cod.	Descrizione	Description	Description	Benennung	Descripcion
1	B0C005009R	SOSTEGNO ANT. SX	LEFT FRONT SUPPORT	SUPPORT EN AVANT GAUCHE	HALTER VORNE LINKS	SOPORTE ANT. IZQ.
2	B00180625R	VITE M6X1X 25 U5739 8.8ZN	SCREW	VIS	SCHRAUBE	TORNILLO M6X1X 25 U5739 8.8ZN
3	F01410037R	ROS.M6 6,4X12,5X1,6 U6592 ZN	WASHER M6 6,4X12,5X1,6 U6592ZN	RONDEL.M6 6,4X12,5X1,6 U6592ZN	SCHEIB.M6 6,4X12,5X1,6 U6592ZN	ARAND.M6 6,4X12,5X1,6 U6592 ZN
4	F01230184R	DADO M6X1 D985 8ZN	NUT M6X1 D985 8ZN			TUERCA M6X1 D985 8
5	B00180620R	VITE M6X1X20 U5739 8.8ZN	SCREW	VIS	SCHRAUBE	TORNILLO M6X1X20 U5739 8
6	F01410037R	ROS.M6 6,4X12,5X1,6 U6592 ZN	WASHER M6 6,4X12,5X1,6 U6592ZN	RONDEL.M6 6,4X12,5X1,6 U6592ZN	SCHEIB.M6 6,4X12,5X1,6 U6592ZN	ARAND.M6 6,4X12,5X1,6 U6592 ZN
7	F01230184R	DADO M6X1 D985 8ZN	NUT M6X1 D985 8ZN			TUERCA M6X1 D985 8
8	B07S01614R	TELAIO CARTER SX HT	HT LEFT GUARD FRAME	CHASSIS CARTER GAUCHE HT	CARTER RAHMEN LINKS HT	BASTIDOR C RTER IZQ HT
9	F01040140R	VITE M12X1,75X 40 U5931 8.8ZN	SCREW M12X1,75X 40 U5931 8.8Z			TORNILLO M12X1,75X 40 U5931 8.
10	F01420120R	ROS.M12 13X36X2,5 U6593 ZN	WASHER M12 13X36X2,5 U6593 ZN	RONDELLE M12 13X36X2,5 ZN		ARAND.M12 13X36X2,5 U6593 ZN
11	B01300463R	BUSSOLA 12.5X20X10	BUSH	DOUILLE	KOMPASS	CASQUILLO 12.5X20X10
12	F01230213R	DADO M12X1,75 U7474 CL8 ZN	NUT M12X1,75 U7474 6SZN	ECROU AUTOBL. M12	SELBSTSPERR.MUTTER M12	TUERCA M12X1,75 U7474 CL8 ZN
13	B0C004692R	SOSTEGNO SUPERIORE SX	LEFT UPPER SUPPORT	SUPPORT SUPERIEUR GAUCHE	HALTER OBEN LINKS	SOPORTE SUPERIOR IZQ
14	B00180625R	VITE M6X1X 25 U5739 8.8ZN	SCREW	VIS	SCHRAUBE	TORNILLO M6X1X 25 U5739 8.8ZN
15	F01410037R	ROS.M6 6,4X12,5X1,6 U6592 ZN	WASHER M6 6,4X12,5X1,6 U6592ZN	RONDEL.M6 6,4X12,5X1,6 U6592ZN	SCHEIB.M6 6,4X12,5X1,6 U6592ZN	ARAND.M6 6,4X12,5X1,6 U6592 ZN
16	F01230184R	DADO M6X1 D985 8ZN	NUT M6X1 D985 8ZN			TUERCA M6X1 D985 8
17	B00180620R	VITE M6X1X20 U5739 8.8ZN	SCREW	VIS	SCHRAUBE	TORNILLO M6X1X20 U5739 8
18	F01410037R	ROS.M6 6,4X12,5X1,6 U6592 ZN	WASHER M6 6,4X12,5X1,6 U6592ZN	RONDEL.M6 6,4X12,5X1,6 U6592ZN	SCHEIB.M6 6,4X12,5X1,6 U6592ZN	ARAND.M6 6,4X12,5X1,6 U6592 ZN
19	F01230184R	DADO M6X1 D985 8ZN	NUT M6X1 D985 8ZN			TUERCA M6X1 D985 8
20	B01800082R	SILENT BLOCK 30X30-M8X25	SILENT BLOCK 30X30-M8X20	SILENT BLOCK 30X30-M8X20	SILENTBLOCK 30X30-M8X20	SILENT BLOCK 30X30-M8X25
21	B00920208R	DADO AUTOB.BASSO M 8-5S D985	NUT M8X1 D985 8ZN	ECROU	SELBSTSICHERNDE MUTTER M8-5S	TUERCA M8X1 D985 8
22	F01410051R	ROS.M8 8,4X 17X1,6 U6592 ZN	WASHER M8 8,4X17X1,6 U6592 ZN	RONDELLE M8 8,4X17X1,6 ZN	SCHEIBE M8 8,4X17X1,6 U6592 ZN	ARAND.M8 8,4X 17X1,6 U6592 ZN
23	B0C100002R	SOSTEGNO CENTRALE	CENTRAL SUPPORT	SUPPORT CENTRAL	ANSCHLUSS ZENTRAL	SOPORTE CENTRAL
24	B00180625R	VITE M6X1X 25 U5739 8.8ZN	SCREW	VIS	SCHRAUBE	TORNILLO M6X1X 25 U5739 8.8ZN
25	F01410037R	ROS.M6 6,4X12,5X1,6 U6592 ZN	WASHER M6 6,4X12,5X1,6 U6592ZN	RONDEL.M6 6,4X12,5X1,6 U6592ZN	SCHEIB.M6 6,4X12,5X1,6 U6592ZN	ARAND.M6 6,4X12,5X1,6 U6592 ZN
26	F01230184R	DADO M6X1 D985 8ZN	NUT M6X1 D985 8ZN			TUERCA M6X1 D985 8
27	B00180620R	VITE M6X1X20 U5739 8.8ZN	SCREW	VIS	SCHRAUBE	TORNILLO M6X1X20 U5739 8
28	F01410037R	ROS.M6 6,4X12,5X1,6 U6592 ZN	WASHER M6 6,4X12,5X1,6 U6592ZN	RONDEL.M6 6,4X12,5X1,6 U6592ZN	SCHEIB.M6 6,4X12,5X1,6 U6592ZN	ARAND.M6 6,4X12,5X1,6 U6592 ZN
29	F01230184R	DADO M6X1 D985 8ZN	NUT M6X1 D985 8ZN			TUERCA M6X1 D985 8
30	B07S01850R	ATTACCO CHIUSURA	CLOSURE CONNECTION	ATTELAGE FERMETURE	VERSCHLUSSANSCHLUSS	CONEXI N DE CIERRE
31	F01060202R	VITE M8X1,25X25 U5731 4.6ZN	SCR. M8X1,25X25 U5731 4.6ZN	VIS M8X1,25X25 U5731 4.6	DUEBEL M8X1,25X25 U5731 4.6 ZN	TORNILLO M8X1,25X25 U5731 4.6
32	F01420048R	ROS.M8 8,4X 24X 2 U6593 ZN	WASHER M8 8,4X 24X2 U6593 ZN	RONDELLE M8 8,4X24X 2 U6593 ZN	SCHEIBEN M8 8,4X24X 2 U6593 ZN	ARAND.M8 8,4X 24X 2 U6593 ZN
33	B00920208R	DADO AUTOB.BASSO M 8-5S D985	NUT M8X1 D985 8ZN	ECROU	SELBSTSICHERNDE MUTTER M8-5S	TUERCA M8X1 D985 8
34	B0H100003R	MOLLA A GAS 1900N	GAS SPRING 1900N	RESSORT GAS 1900 N	GASFEDER FUR NETZ	MUELLE DE GAS 1900N
35	F01020114R	VITE M10X1,5X50 U5737 8.8ZN	SCR. M10X1,5X50 U5737 8.8ZN	VIS M10X 1,5X50 U5737 8.8 ZN	SCHRA.M10X 1,5X50 U5737 8.8 ZN	TORNILLO M10X1,5X50 U5737 8.8
36	F01410062R	ROS.M10 10,5X 18X 2 U6592 ZN	WASHER M10 10,5X 18X 2 U6592	RONDELLE M10 10,5X18X2 ZN	DICHTUNGSRING M10 10,5X18X2 ZN	ARAND.M10 10,5X 18X 2 U6592 ZN
37	F01200270R	DADO M10X1,5 U5588 CL8 ZN	NUT M10X1,5 U5588 6.8ZN	ECROU M10X 1,5 U5588 6.8 ZN	MUTTER M10X 1,5 U5588 6.8 ZN	TUERCA M10X1,5 U5588 CL8 ZN
38	F01230202R	DADO M10X 1,5 D985 8 ZN	NUT M10 D985	ECROU AUTOBL. M10	SELBSTSPERR.MUTTER M10	TUERCA M10X 1,5 D985 8
39	F01020114R	VITE M10X1,5X50 U5737 8.8ZN	SCR. M10X1,5X50 U5737 8.8ZN	VIS M10X 1,5X50 U5737 8.8 ZN	SCHRA.M10X 1,5X50 U5737 8.8 ZN	TORNILLO M10X1,5X50 U5737 8.8
40	F01410062R	ROS.M10 10,5X 18X 2 U6592 ZN	WASHER M10 10,5X 18X 2 U6592	RONDELLE M10 10,5X18X2 ZN	DICHTUNGSRING M10 10,5X18X2 ZN	ARAND.M10 10,5X 18X 2 U6592 ZN
41	F01200270R	DADO M10X1,5 U5588 CL8 ZN	NUT M10X1,5 U5588 6.8ZN	ECROU M10X 1,5 U5588 6.8 ZN	MUTTER M10X 1,5 U5588 6.8 ZN	TUERCA M10X1,5 U5588 CL8 ZN
42	F01230202R	DADO M10X 1,5 D985 8 ZN	NUT M10 D985	ECROU AUTOBL. M10	SELBSTSPERR.MUTTER M10	TUERCA M10X 1,5 D985 8
43	B07S01613R	ATTACCO CERNIERA CARTER SX	LEFT GUARD HINGE CONNECTION	ATTELAGE CHARNIERE CARTER GAUC	ANSCHLUSS CARTER LINKS	CONEXI N BISAGRA C RTER IZQ
44	B00523421R	VITE SPECIALE TTQST M12X35-8.8	SPECIAL SCREW	VIS SPCIALE	SCHRAUBE TTQST M12X 35-8.8	TORNILLO ESPECIAL TTQST M12X3
45	F01410076R	ROS.M12 13X 24X2,5 U6592 ZN	WASHER 12 13X 24X2,5 U6592 ZN	RONDEL. M12 13X24X2,5 U6592 ZN	SCHEIBE M12 13X24X2,5 U6592 ZN	ARAND.M12 13X 24X2,5 U6592 ZN
46	F01230213R	DADO M12X1,75 U7474 CL8 ZN	NUT M12X1,75 U7474 6SZN	ECROU AUTOBL. M12	SELBSTSPERR.MUTTER M12	TUERCA M12X1,75 U7474 CL8 ZN
47	B0C005039R	SOSTEGNO SX CAPPELLO	CAP LEFT SUPPORT	SUPPORT GAUCHE CHAPEAU	HALTER LINKS DECKEL	SOPORTE IZQ CAPUCH N
48	F01060202R	VITE M8X1,25X25 U5731 4.6ZN	SCR. M8X1,25X25 U5731 4.6ZN	VIS M8X1,25X25 U5731 4.6	DUEBEL M8X1,25X25 U5731 4.6 ZN	TORNILLO M8X1,25X25 U5731 4.6
49	F01420048R	ROS.M8 8,4X 24X 2 U6593 ZN	WASHER M8 8,4X 24X2 U6593 ZN	RONDELLE M8 8,4X24X 2 U6593 ZN	SCHEIBEN M8 8,4X24X 2 U6593 ZN	ARAND.M8 8,4X 24X 2 U6593 ZN
50	B00920208R	DADO AUTOB.BASSO M 8-5S D985	NUT M8X1 D985 8ZN	ECROU	SELBSTSICHERNDE MUTTER M8-5S	TUERCA M8X1 D985 8
51	B01000010R	RIVETTO STR. 6X12 U9200A AL	RIVET	RIVET	ABREISSNIETEN 6X10	REMACHE EXTR. 6X12 U9200A A
52	B0C004649R	CORPO CARTER SX 265	LEFT CARDER BODY 265	CORPS CARTER GAUCHE 265	KOERPER CARTER LINKS 265	CUERPO C RTER IZQ 265
53	B0C004694R	CASSONE ROTOLO SX 265	LEFT ROLLER BOX 265	RESERVE ROULEAU GAUCHE 265	ROLLEHALTER LINKS 265	CAJ N DEL ROLLO IZQ 265
54	B01000011R	RIVETTO STR. 6X12 U9200A AL	RIVET 6X12 U9200A AL	RIVET	ABREISSNIETEN 6X15	REMACHE EXTR. 6X12 U9200A A
55	B07V00117R	MANIGL.01M20120D DITTA THENAR	HANDLE 01M20120D FROM THENAR	POIGNEE 01M20120D	GRIFF	MANILL.01M20120D EMPRESA THE
56	F01020431R	VITE M8X1,25X15 U5739 8.8ZN	SCR. M8X1,25X15 U5739 8.8ZN	VIS M 8X15	SCHRAUBE M 8X15	TORNILLO M8X1,25X15 U5739 8.8
57	F01410051R	ROS.M8 8,4X 17X1,6 U6592 ZN	WASHER M8 8,4X17X1,6 U6592 ZN	RONDELLE M8 8,4X17X1,6 ZN	SCHEIBE M8 8,4X17X1,6 U6592 ZN	ARAND.M8 8,4X 17X1,6 U6592 ZN

TAV_280

(*) 1, 8, 13, 43, 47, 52, 53, 59 = SINISTRO
LEFT
(**) 61, 62, 63, 64, 65, 66, 67, 68 = DESTRO
RIGHT

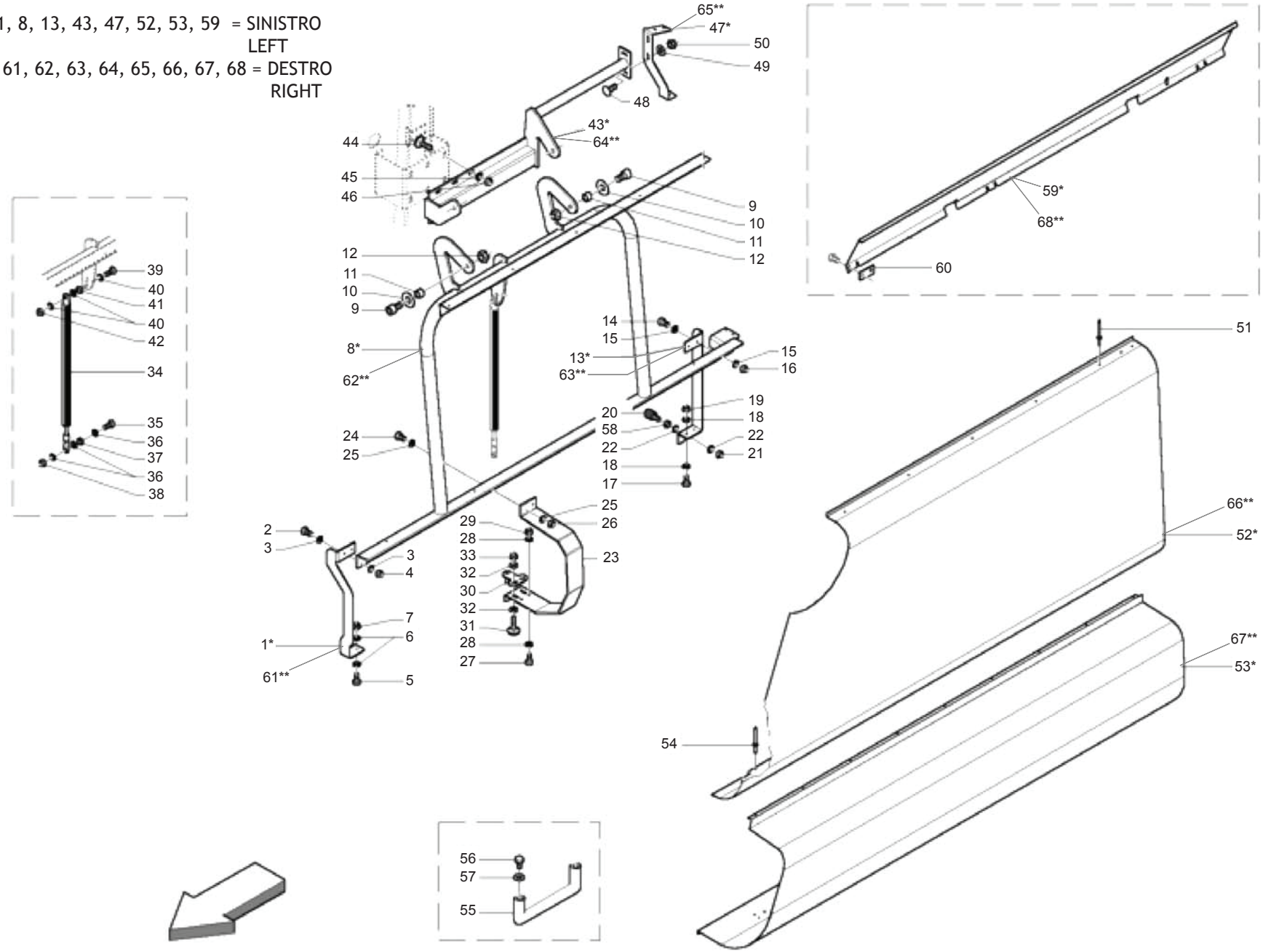

CARTER LATERALI
SIDE CARTER

TAV_280

Pos.	Cod.	Descrizione	Description	Description	Benennung	Descripcion
58	F01200244R	DADO M8X1,25 U5588 CL8 ZN	NUT M8X1,25 U5588 6.8ZN	ECROU M8 X1,25 U5588 6.8 ZN	MUTTER M8 X1,25 U5588 6.8 ZN	TUERCA M8X1,25 U5588 CL8 ZN
59	B0C3P0042R	PROT.INT.SX CARTER LAT.265-280	GUARD LEFT INNER PROTECTION	PROTECTION INT. GAUCHE CARTER	SCHUETZ LINKS CARTER	PROT.INT.IZQ C RTER LAT.265-28
60	B0C6P0112R	SOSTEGNO PROT. INTERNA	INNER PROTECTION SUPPORT	SUPPORT PROTECTION INTERIEURE	SCHUETZHALTER	SOPORTE PROTE. INTERNA
61	B0C005010R	SOSTEGNO ANT. DX	RIGHT FRONT SUPPORT	SUPPORT EN AVANT DROIT	HALTER VORNE RECHTS	SOPORTE ANT. DER.
62	B07S01615R	TELAIO CARTER DX HT	HT RIGHT GUARD FRAME	CHASSIS CARTER DROIT HT	CARTER RAHMEN RECHTS HT	BASTIDOR C RTER DER HT
63	B0C004693R	SOSTEGNO SUPERIORE DX	RIGHT UPPER SUPPORT	SUPPORT SUPERIEUR DROIT	HALTER OBEN RECHTS	SOPORTE SUPERIOR DER
64	B07S01767R	ATTACCO CERNIERA CARTER DX	RIGHT GUARD HINGE COUPLING	ATTELAGE CHARNIERE CARTER DROI	SCHARNIER ANSCHLUSS	CONEXI N BISAGRA C RTER DER
65	B0C005040R	SOSTEGNO DX CAPPELLO	RIGHT CAP SUPPORT	SUPPORT DROIT CHAPEAU	HALTER RECHTS DECKEL	SOPORTE DER CAPUCH N
66	B0C004650R	CORPO CARTER DX 265	RIGHT CARTER BODY 265	CORPS CARTER DROIT 265	KOERPER CARTER RECHTS 265	CUERPO C RTER DER 265
67	B0C004695R	CASSONE ROTOLO DX 265	RIGHT ROLLER BOX 265	RESERVE ROULEAU DROIT 265	ROLLEHALTER RECHTS 265	CAJ N DEL ROLLO DER 265
68	B0C3P0043R	PROT.INT.DX CARTER LAT.265-280	SIDE GUARD 265-280 RIGHT INNER	PROT. INTERIEUR DROITE CARTER	SCHUETZ RECHTS CARTER	PROT.INT.DER C RTER LAT.265-28

TAV_285

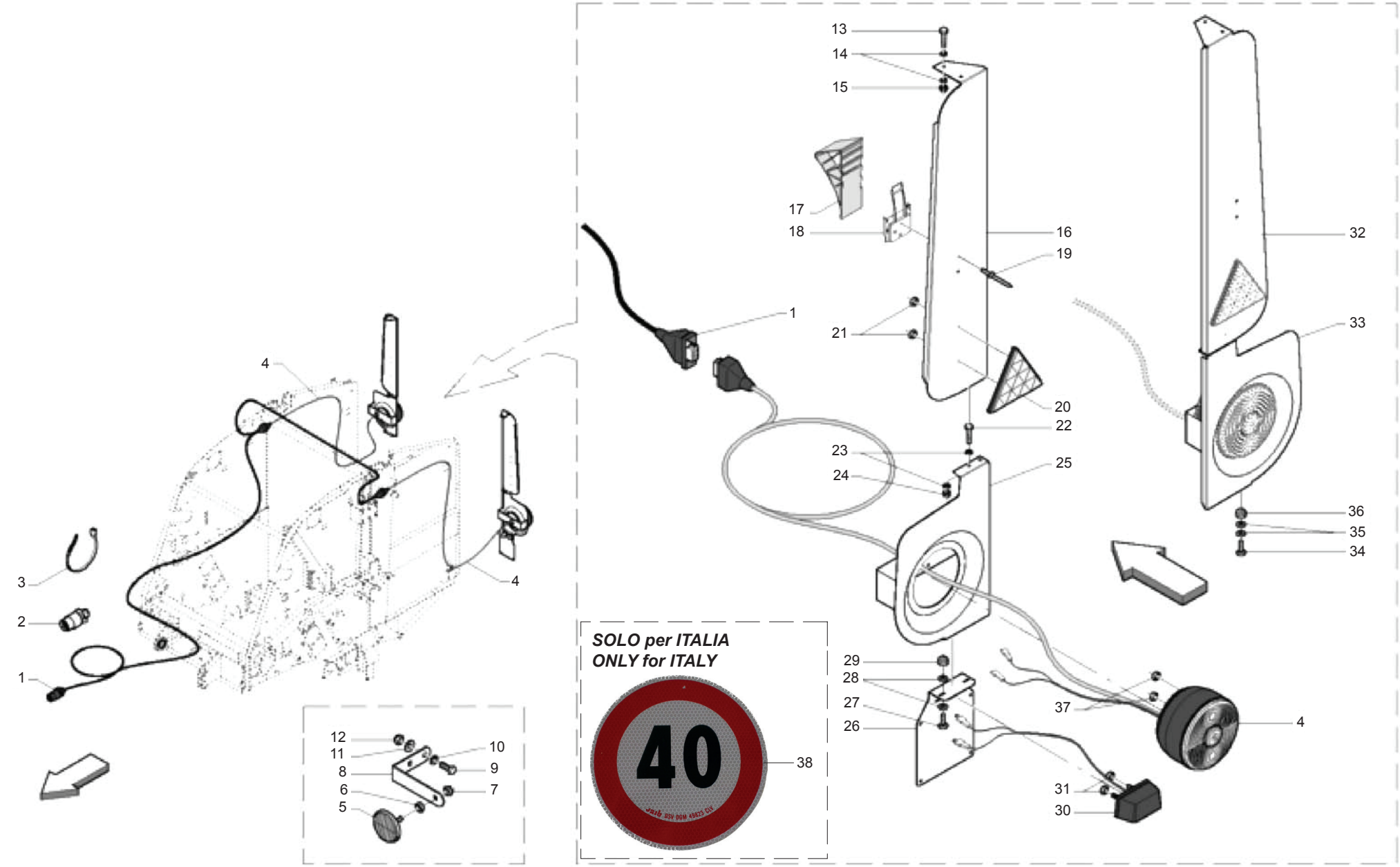

MASCHIO

cod. F07022338

IMPIANTO LUCI + CUNEI
LIGHTS PLANT + CHOCKS

TAV_285

Pos.	Cod.	Descrizione	Description	Description	Benennung	Descripcion
1	B0E000137R	SPINA 7 POLI E CABLAGGIO EXTRE	7-POLES PLUG AND WIRING HARNES			CLAVIJA DE 7 POLOS CABLEADO E
2	B0E000011R	SPINA 7 POL.12V VST_018 REMPA	7 POLE PLUG 12 V	GOUPILLE A 7 POLES 12V	7 POL-STECKER 12 V	CLAVIJA 7 POL.12V VST_018 REMP
3	F05150055R	FASCETTA POLYA. 3,6X200 NERA	WHITE BAND	BANDE BIANCHE	WEIBE BAND	BANDA POLYA. 3,6X200 NEGRA
4	B0E000136R	FANALE POST. EXTREME	EXTREME BACK LAMP	FEU EN ARRIERE EXTREME	BELEUCHTUNG HINTEN EXTREME	FARO TRAS. EXTREME
5	B0E000026R	CATADIOTRO ROTONDO BIANCO	WHITE ROUND RETROREFLECTOR	CATADIOPTRE ROND BLANC	RUNDER WEISSER RUECKSTRAHLER	CATADI PTRICO REDONDO BLANCO
6	F01200220R	DADO M5X0,8 U5588 CL8 ZN	NUT M5X0,8 U5588 6.8ZN	ECROU 5 UNI 5588 6.8 ZN	MUTTER 5 UNI 5588 6.8 ZN	TUERCA M5X0,8 U5588 CL8 ZN
7	B00920005R	DADO AUTOB.BASSO M 5-5S DIN985	NUT	ECROU	SELBSTSICHERNDE MUTTER M5-5S	TUERCA AUTOB.BAJA M 5-5S DIN98
8	B0C6P0034R	SOSTEGNO CATARIFRANGENTE	REFLEX REFLECTO SUPPORT	SUPPORT CATADIOPTRE	HALTER RUECKSTRAHLER	SOPORTE CATADI PTRICO
9	B00180620R	VITE M6X1X20 U5739 8.8ZN	SCREW	VIS	SCHRAUBE	TORNILLO M6X1X20 U5739 8
10	F01410037R	ROS.M6 6,4X12,5X1,6 U6592 ZN	WASHER M6 6,4X12,5X1,6 U6592ZN	RONDEL.M6 6,4X12,5X1,6 U6592ZN	SCHEIB.M6 6,4X12,5X1,6 U6592ZN	ARAND.M6 6,4X12,5X1,6 U6592 ZN
11	F01420035R	ROS.M6 6,4X 18X1,6 U6593 ZN	WASHER D.6	RONDELLE D.6	KUPFERSCHEIBE D.6	ARAND.M6 6,4X 18X1,6 U6593
12	F01230184R	DADO M6X1 D985 8ZN	NUT M6X1 D985 8ZN			TUERCA M6X1 D985 8
13	B00180620R	VITE M6X1X20 U5739 8.8ZN	SCREW	VIS	SCHRAUBE	TORNILLO M6X1X20 U5739 8
14	F01410037R	ROS.M6 6,4X12,5X1,6 U6592 ZN	WASHER M6 6,4X12,5X1,6 U6592ZN	RONDEL.M6 6,4X12,5X1,6 U6592ZN	SCHEIB.M6 6,4X12,5X1,6 U6592ZN	ARAND.M6 6,4X12,5X1,6 U6592 ZN
15	F01230184R	DADO M6X1 D985 8ZN	NUT M6X1 D985 8ZN			TUERCA M6X1 D985 8
16	B0C004999R	CHIUSURA SUPERIORE SX	LEFT UPPER LOCK	FERMETURE SUPERIEURE GAUCHE	LINKER OBERER VERSCHLUSS	CIERRE SUPERIOR IZQ
17	F02250716R	CUNEO FERMO MACCHINA PLA	WEDGE STOP MACHINE PLA			
18	F02250717R	SUPPORTO CUNEO PLA	SUPPORT WEDGE PLA			SOPORTE DE CU A PLA
19	B01000011R	RIVETTO STR. 6X12 U9200A AL	RIVET 6X12 U9200A AL	RIVET	ABREISSNIETEN 6X15	REMACHE EXTR. 6X12 U9200A A
20	B0E000025R	CATADIOTRO TRIANGOLARE ROSSO	RED TRIANGULAR RETROREFLECTOR	CATADIOPTRE TRIANGULAIRE ROUGE	DREIECKIGER ROTER RUECKSTRAHLE	CATADI PTRICO TRIANGULAR ROJO
21	F01230184R	DADO M6X1 D985 8ZN	NUT M6X1 D985 8ZN			TUERCA M6X1 D985 8
22	B00180625R	VITE M6X1X 25 U5739 8.8ZN	SCREW	VIS	SCHRAUBE	TORNILLO M6X1X 25 U5739 8.8ZN
23	F01410037R	ROS.M6 6,4X12,5X1,6 U6592 ZN	WASHER M6 6,4X12,5X1,6 U6592ZN	RONDEL.M6 6,4X12,5X1,6 U6592ZN	SCHEIB.M6 6,4X12,5X1,6 U6592ZN	ARAND.M6 6,4X12,5X1,6 U6592 ZN
24	F01230184R	DADO M6X1 D985 8ZN	NUT M6X1 D985 8ZN			TUERCA M6X1 D985 8
25	B07S01635R	ATTACCO FANALE SX	LEFT LIGHT ATTACHMENT	ATTELAGE FANAL GAUCHE	LINKER LICHTANSCHLUSS	CONEXI N FARO IZQ
26	B0C005037R	PORTA TARGA	PLATE HOLDER	PORTE-PLAQUE	SCHILDTRAEGER	PORTA PLACA
27	B00180620R	VITE M6X1X20 U5739 8.8ZN	SCREW	VIS	SCHRAUBE	TORNILLO M6X1X20 U5739 8
28	F01410037R	ROS.M6 6,4X12,5X1,6 U6592 ZN	WASHER M6 6,4X12,5X1,6 U6592ZN	RONDEL.M6 6,4X12,5X1,6 U6592ZN	SCHEIB.M6 6,4X12,5X1,6 U6592ZN	ARAND.M6 6,4X12,5X1,6 U6592 ZN
29	F01230184R	DADO M6X1 D985 8ZN	NUT M6X1 D985 8ZN			TUERCA M6X1 D985 8
30	B0E000138R	LUCE TARGA POST. EXTREME	EXTREME REAR PLATE LIGHT	LUMI RE PLAQUE EN ARRIERE	PLATTE BELEUCHTUNG EXTREME	LUZ DE LA PLACA TRAS. EXTREME
31	B00920005R	DADO AUTOB.BASSO M 5-5S DIN985	NUT	ECROU	SELBSTSICHERNDE MUTTER M5-5S	TUERCA AUTOB.BAJA M 5-5S DIN98
32	B0C005019R	CHIUSURA SUPERIORE DX	RIGHT UPPER LOCK	FERMETURE SUPERIEURE DROITE	RECHTER OBERER VERSCHLUSS	CIERRE SUPERIOR DER
33	B07S01634R	ATTACCO FANALE DX	RIGHT LIGHT ATTACHMENT	ATTELAGE FANAL DROIT	RECHTER LICHTANSCHLUSS	CONEXI N FARO DER
34	B00180620R	VITE M6X1X20 U5739 8.8ZN	SCREW	VIS	SCHRAUBE	TORNILLO M6X1X20 U5739 8
35	F01410037R	ROS.M6 6,4X12,5X1,6 U6592 ZN	WASHER M6 6,4X12,5X1,6 U6592ZN	RONDEL.M6 6,4X12,5X1,6 U6592ZN	SCHEIB.M6 6,4X12,5X1,6 U6592ZN	ARAND.M6 6,4X12,5X1,6 U6592 ZN
36	F01230184R	DADO M6X1 D985 8ZN	NUT M6X1 D985 8ZN			TUERCA M6X1 D985 8
37	B00920005R	DADO AUTOB.BASSO M 5-5S DIN985	NUT	ECROU	SELBSTSICHERNDE MUTTER M5-5S	TUERCA AUTOB.BAJA M 5-5S DIN98
38	F20030261R	ETICH. LIMITE VELOCITA 40	SPEED LIMIT 40 LABEL			ETIQ. L MITE VELOCIDAD 40

TAV_290

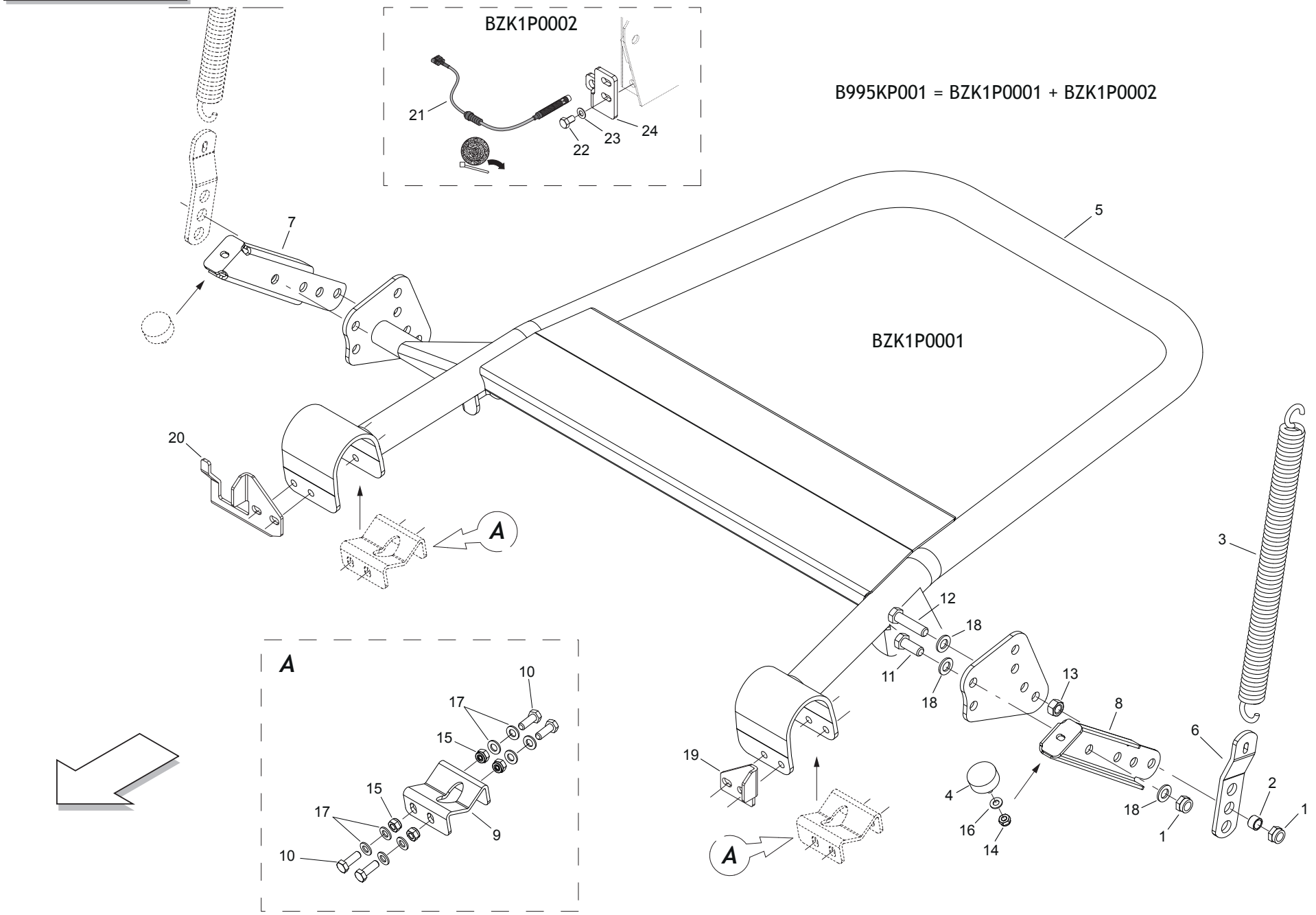

MASCHIO

cod. F07022338

ESPULSORE
EJECTOR

TAV_290

Pos.	Cod.	Descrizione	Description	Description	Benennung	Descripcion
1	B00920516R	DADO M16X 1,5 D985 6S ZN	NUT M16X1,5 D985 6S ZN	ECROU	SELBSTSICHERNDE MUTTER M16-5S	TUERCA M16X 1,5 D985 6S
2	B013P0255R	DISTANZIALE 16 21,3 13	SPACER 16 21,3 13			DISTANCIADOR 16 21,3 13
3	B01800090R	MOLLA TRAZ. 8 M=35 L=596	SPRING	RESSORT DE TRAC.DE 8 M35 L596	FEDER	MUELLE DE TRACC. 8 M=35 L=596
4	B07049749R	TAMPONE 50X21 M10	BUMPER 50X21 M10	TAMPON 50X21 M10	PUFFER 50X21 M10	TAP N 50X21 M10
5	B07S01806R	ESPULSORE	EJECTOR	EJECTEUR	BALLENAUSWERFER	EXPULSOR
6	B0C1P1876R	ATTACCO MOLLA CON REGOLAZIONE	SPRING LINK			PLACA DEL SENSOR EXPULSOR
7	B0C1P1878R	APPOGGIO DX TAMPONE ESPULSORE	SUPPORT RIGHT			APOYO DER TAP N EXPULSOR
8	B0C1P1879R	APPOGGIO SX TAMPONE ESPULSORE	SUPPORT LEFT			APOYO IZQ TAP N EXPULSOR
9	B0C6P0226R	CAVALLOTTO	U BOLT	BOULON	U-BUEGEL	PUENTE
10	F01020512R	VITE M12X1,75X35 U5739 8.8ZN	SCR. M12X1,75X35 U5739 8.8ZN	VIS M12X1,75X35 5739 8.8 ZN	SCHR. M12X1,75X35 5739 8.8 ZN	TORNILLO M12X1,75X35 U5739 8
11	F01020566R	VITE M16X2X40 U5739 8.8ZN	SCR. M16X2X40 U5739 8.8ZN	VIS M16X2X40 U5739 8.8 ZN	SCHRAUBE M16X2X40 U5739 8.8 ZN	TORNILLO M16X2X40 U5739 8
12	F01020576R	VITE M16X2X65 U5739 8.8ZN	SCR. M16X2X65 U5739 8.8ZN	VIS M16X2X65 U5739 8.8 ZN	SCHRAUBE M16X2X65 U5739 8.8 ZN	TORNILLO M16X2X65 U5739 8
13	F01200324R	DADO M16X2 U5588 8.8ZN	NUT M16X2 U5588 8.8ZN	ECROU M16X2 U5588 8.8ZN	MUTTER M16X2 U5588 8.8ZN	TUERCA M16X2 U5588 8.8ZN
14	F01230202R	DADO M10X 1,5 D985 8 ZN	NUT M10 D985	ECROU AUTOBL. M10	SELBSTSPERR.MUTTER M10	TUERCA M10X 1,5 D985 8
15	F01230213R	DADO M12X1,75 U7474 CL8 ZN	NUT M12X1,75 U7474 6SZN	ECROU AUTOBL. M12	SELBSTSPERR.MUTTER M12	TUERCA M12X1,75 U7474 CL8 ZN
16	F01410064R	ROS.M10 10,5X 20X 2 U6592 ZN	WASHER M10 10,5X20X2 U6592 ZN	RONDEL. M10 10,5X20X2 U6592 ZN	SCHEIBE M10 10,5X20X2 U6592 ZN	ARAND.M10 10,5X 20X 2 U6592 ZN
17	F01410076R	ROS.M12 13X 24X2,5 U6592 ZN	WASHER 12 13X 24X2,5 U6592 ZN	RONDEL. M12 13X24X2,5 U6592 ZN	SCHEIBE M12 13X24X2,5 U6592 ZN	ARAND.M12 13X 24X2,5 U6592 ZN
18	F01410100R	ROS.M16 17X 30X 3 U6592 ZN	WASHER M16 17X30X3 U6592 ZN	RONDELLE M16 17X30X3 ZN	SCHRAUBE M16 17X 30X3 U6592 ZN	ARAND.M16 17X 30X 3 U6592 ZN
19	B0C6P0006R	REGOLATORE	REGULATOR	REGULATEUR	EINSTELLER	REGULADOR
20	B0C6P0005R	CONTROSENSORE	COUNTER SENSOR	CONTRE-CAPTEUR	GEGENSENSOR	CONTRA-SENSOR
21	B0E0P0026R	SENSORE ESPULSORE	EJECTING SENSOR F_BUS	CAPTEUR JECTEUR F_BUS	SENSOR AUSWERFER LT	SENSOR EXPULSOR
22	F01020436R	VITE M8X1,25X20 U5739 8.8ZN	SCR. M8X1,25X20 U5739 8.8ZN	VIS M8X1,25X 20 U5739 8.8 ZN	SCHRAUBE M8X1,25X20U5739 8.8ZN	TORNILLO M8X1,25X20 U5739 8.8
23	F01410051R	ROS.M8 8,4X 17X1,6 U6592 ZN	WASHER M8 8,4X17X1,6 U6592 ZN	RONDELLE M8 8,4X17X1,6 ZN	SCHEIBE M8 8,4X17X1,6 U6592 ZN	ARAND.M8 8,4X 17X1,6 U6592 ZN
24	B0C6P0004R	ATTACCO SENSORE ESPULSORE	EJECTOR SENSOR COUPLING	ATTELAGE CAPTEUR EJECTEUR	ANSCHLUSS AUSFERWERSENSOR	ENGANCHE DEL SENSOR EXPULSO

TAV_295

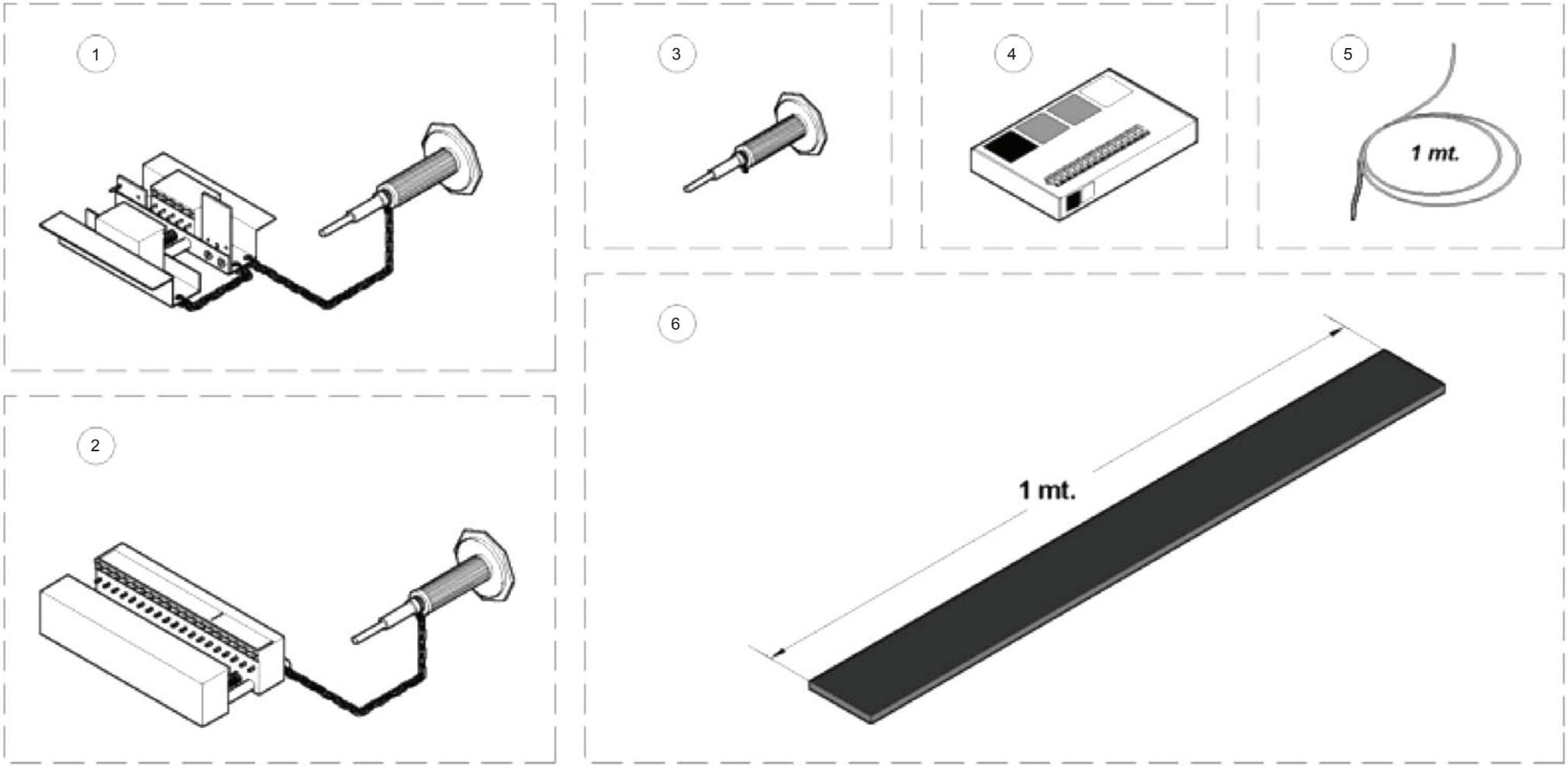

GRAFFATURA
STAPLING DEVICE

TAV_295

Pos.	Cod.	Descrizione	Description	Description	Benennung	Descripcion
1	B0ZAP0025R	GRAFFATRICE MATO PROFI 5	GRAFFATRICE MATO PROFI 5 .			GRAPADORA MATO PROFI 5
2	B0ZAP0026R	GRAFFATRICE MATO PROFI 19	STAPLER MATO PROFI 19 .		STAPLER MATO PROFI 19	GRAPADORA MATO PROFI 19
3	B07U00049R	SEPAR.PUNCH H X VICE LACERS	PUNCH	POINCON	PUNZEN	SEPAR.PUNZ N H X VICE LACERS
4	B09940018R	SCAT. GRAFFE MATO U24BS-12 13	MATO LACINGS BOX	BOITE AGRAF.MATO U24BS-12 13	SCHACHTEL MIT KLAMMERN MATO	CAJA GRAPAS MATO U24BS-12 13
5	B09962005R	CAVETTO GIUNZIONE MT.1	WIRE 2,5 PLAST.L.1MT	CABLE	KABEL 49 SCHNUREN	CABLE DE UNI N 1 M
6	B07600073R	SPEZZONE CINGHIA MT 01	BELT PIECE L=1000	PIECE DE COURROIE	GURT TEILSTUCK L=1000	TROZO CORREA MT 01

TAV_300

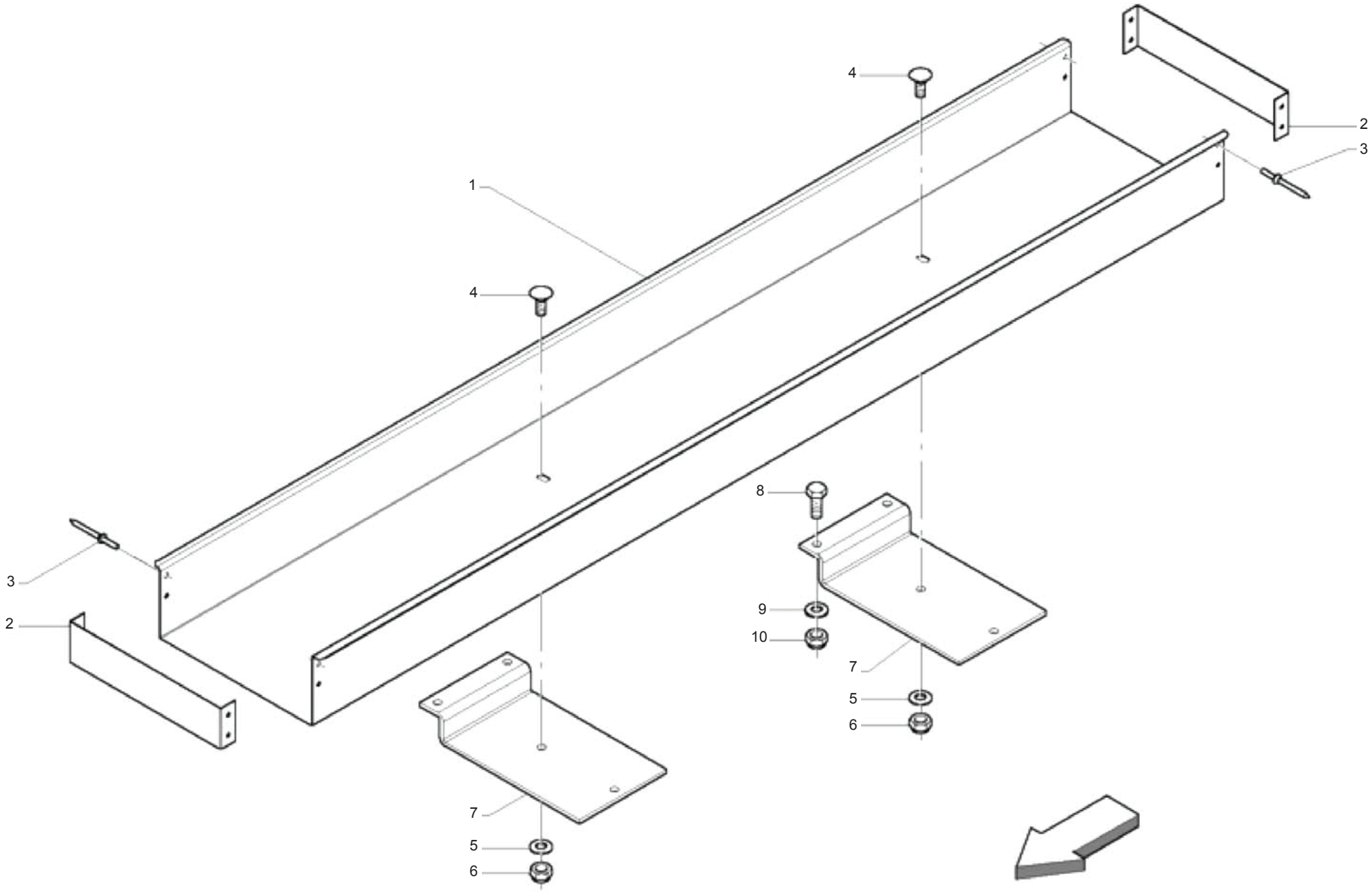

MASCHIO

cod. F07022338

KIT CASSONETTO SUPPLEMENTARE PER BOBINE FILO
ADDITIONAL TWINE BOX KIT

TAV_300

Pos.	Cod.	Descrizione	Description	Description	Benennung	Descripcion
1	B0C005015R	CORPO CASSONE SUPP. 265-280	ADDITIONAL BOX	CORPS BOITE SUPPLEMENTAIRE	ZUSATZKASTEN	CUERPO DE CAJ N DE SOP. 265-28
2	B0C005014R	FERMO TERMINALE	TERMINAL LOCK	ARRET	ENDANSCHLAG	TOPE TERMINAL
3	B01000010R	RIVETTO STR. 6X12 U9200A AL	RIVET	RIVET	ABREISSNIETEN 6X10	REMACHE EXTR. 6X12 U9200A A
4	B00321020R	VITE M10X1,5 X 30 U5731 4.6ZN	SCREW	VIS	SCHRAUBE VERZINKT TTQST M10X20	TORNILLO M10X1,5 X 30 U5731 4
5	F01410062R	ROS.M10 10,5X 18X 2 U6592 ZN	WASHER M10 10,5X 18X 2 U6592	RONDELLE M10 10,5X18X2 ZN	DICHTUNGSRING M10 10,5X18X2 ZN	ARAND.M10 10,5X 18X 2 U6592 ZN
6	F01230202R	DADO M10X 1,5 D985 8 ZN	NUT M10 D985	ECROU AUTOBL. M10	SELBSTSPERR.MUTTER M10	TUERCA M10X 1,5 D985 8
7	B0C004685R	SOSTEGNO CASSONE SPAGO	TWINE BOX HOLDER	SUPPORT RESERVOIR FICELLE	SCHNURKASTENHALTERUNG	SOPORTE CAJ N DE CUERDA
8	F01020476R	VITE M10X1,5X30 U5739 8.8ZN	SCR. M10X1,5X30 U5739 8.8ZN	VIS M10X1,5X30 U5739 8.8 ZN	SCHRAUBE M10X1,5X30U5739 8.8ZN	TORNILLO M10X1,5X30 U5739 8.8
9	F01410062R	ROS.M10 10,5X 18X 2 U6592 ZN	WASHER M10 10,5X 18X 2 U6592	RONDELLE M10 10,5X18X2 ZN	DICHTUNGSRING M10 10,5X18X2 ZN	ARAND.M10 10,5X 18X 2 U6592 ZN
10	F01230202R	DADO M10X 1,5 D985 8 ZN	NUT M10 D985	ECROU AUTOBL. M10	SELBSTSPERR.MUTTER M10	TUERCA M10X 1,5 D985 8

TAV_305

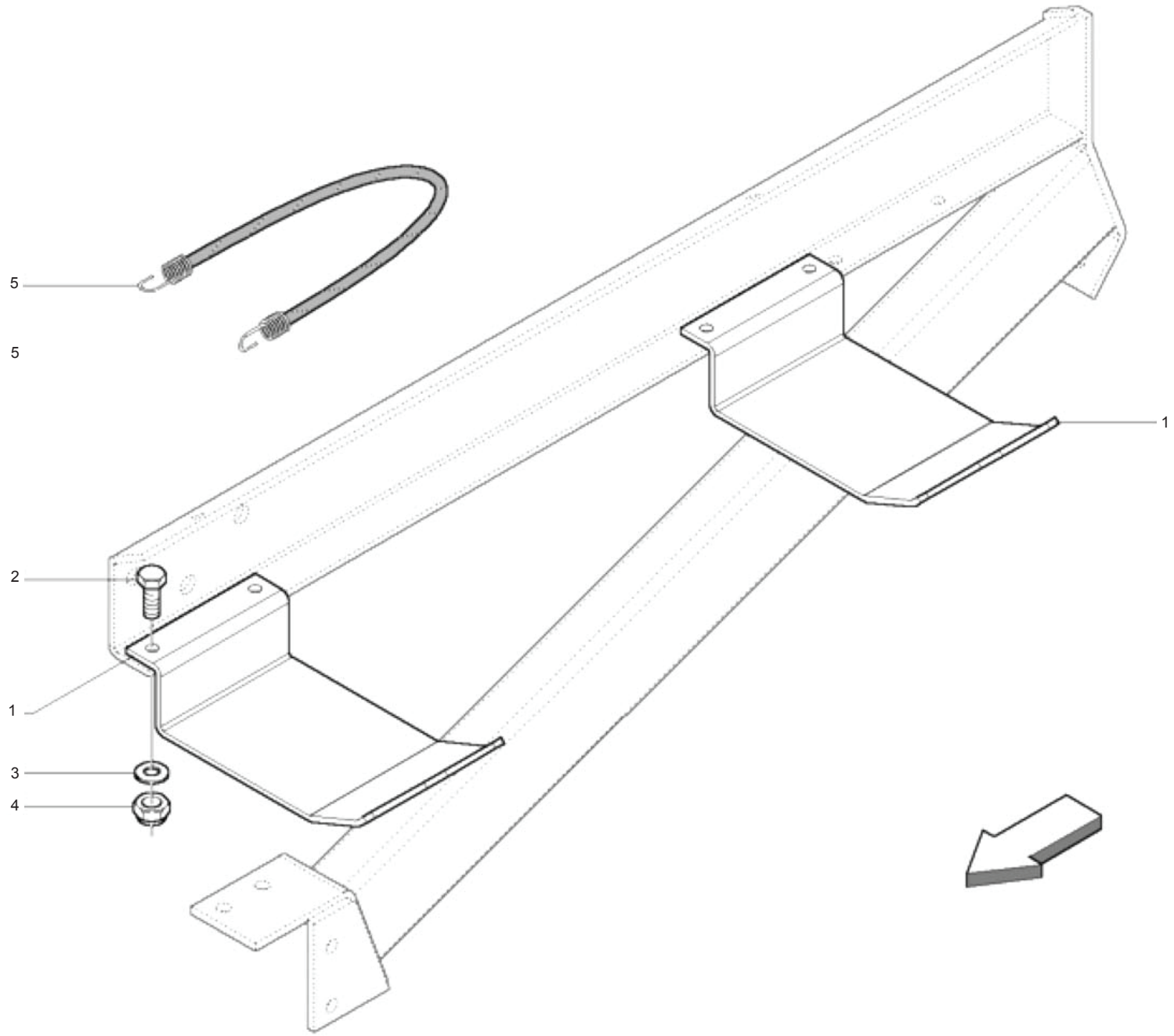

KIT STAFFE SUPPLEMENTARI PER ROTOLO RETE
ADDITIONAL NET SUPPORT KIT

TAV_305

Pos.	Cod.	Descrizione	Description	Description	Benennung	Descripcion
1	B0C100013R	SOSTEGNO RETE	NET SUPPORT	SUPPORT FILET	NETZHALTER	SOPORTE DE RED
2	F01020476R	VITE M10X1,5X30 U5739 8.8ZN	SCR. M10X1,5X30 U5739 8.8ZN	VIS M10X1,5X30 U5739 8.8 ZN	SCHRAUBE M10X1,5X30U5739 8.8ZN	TORNILLO M10X1,5X30 U5739 8.8
3	F01410062R	ROS.M10 10,5X 18X 2 U6592 ZN	WASHER M10 10,5X 18X 2 U6592	RONDELLE M10 10,5X18X2 ZN	DICHTUNGSRING M10 10,5X18X2 ZN	ARAND.M10 10,5X 18X 2 U6592 ZN
4	F01230202R	DADO M10X 1,5 D985 8 ZN	NUT M10 D985	ECROU AUTOBL. M10	SELBSTSPERR.MUTTER M10	TUERCA M10X 1,5 D985 8
5	B07V00107R	FUNE ELASTICA CON GANCI	ELASTIC CABLE WITH HOOKS	CABLE ELASTIQUE AVEC CROCHETS	ELASTISCHES SEIL MIT HAKEN	CABLE EL STICO CON GANCHOS

TAV_310

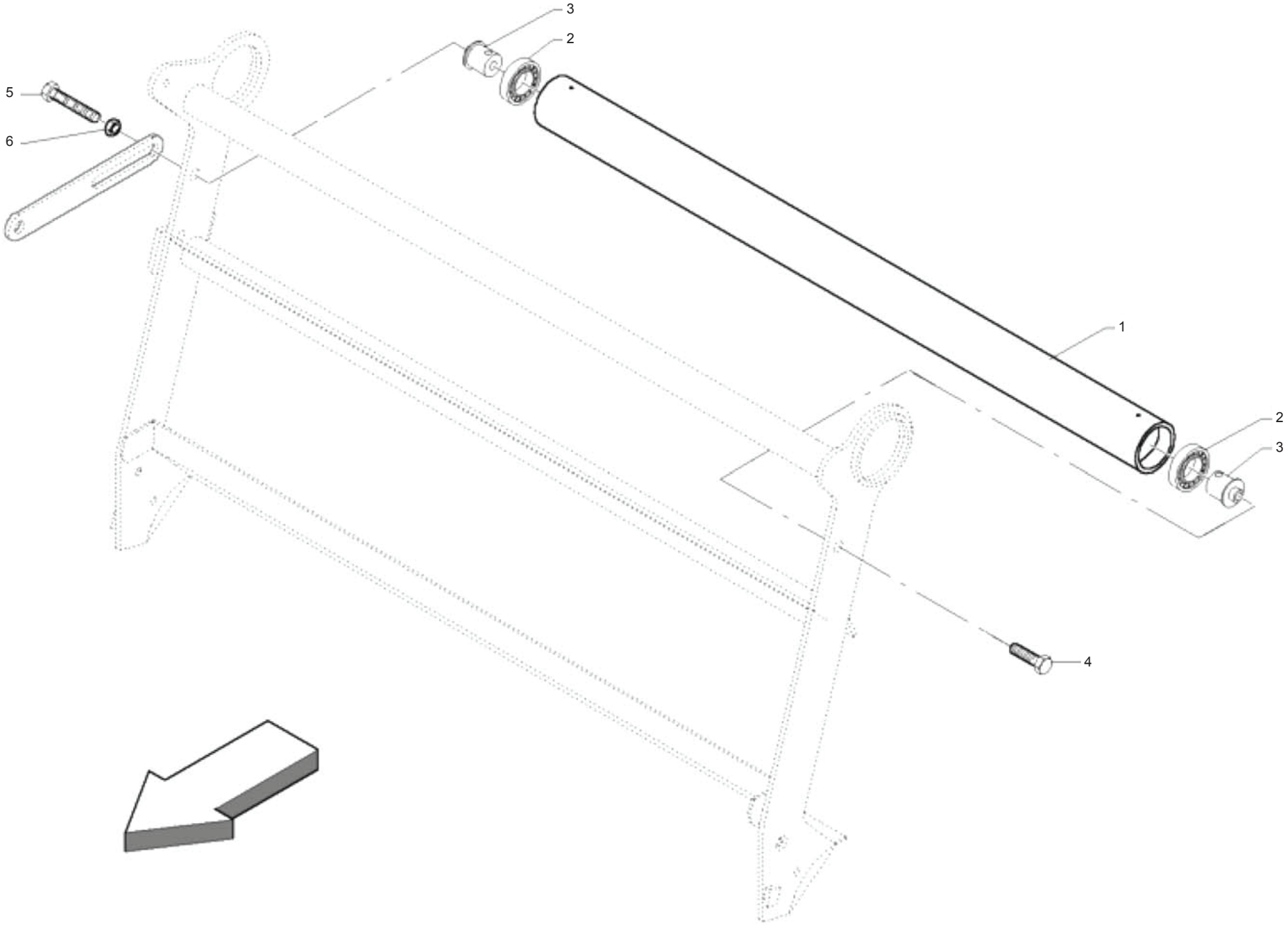

KIT FILM PLASTICO
PLASTIC FILM KIT

TAV_310

Pos.	Cod.	Descrizione	Description	Description	Benennung	Descripcion
1	B03500048R	RULLO FOLLE	IDLE ROLLER	ROULEAU FOU	UMLENKWALZE	RODILLO LOCO
2	B02040002R	CUSCINETTO 6307-2RS CAT.KST004	BEARING	ROULEMENT CAT.KST004	LAGER 6307-2RS	COJINETE 6307-2RS CAT.KST004
3	B03500047R	PERNO RULLO FOLLE	IDLE ROLLER GUDGEON	TOURILLON ROULEAU FOU	STIFT UMLENKWALZE	PERNO RODILLO LOCO
4	F01020512R	VITE M12X1,75X35 U5739 8.8ZN	SCR. M12X1,75X35 U5739 8.8ZN	VIS M12X1,75X35 5739 8.8 ZN	SCHR. M12X1,75X35 5739 8.8 ZN	TORNILLO M12X1,75X35 U5739 8
5	F01020524R	VITE M12X1,75X90 U5739 8.8ZN	SCR. M12X1,75X90 U5739 8.8ZN			TORNILLO M12X1,75X90 U5739 8
6	F01200293R	DADO M12X1,75 U5588 CL8 ZN	NUT M12X1,75 U5588 6S ZN	ECROU M12X1,75 U5588 6S ZN	MUTTER M12X1,75 U5588 6S ZN	TUERCA M12X1,75 U5588 CL8 ZN

TAV_355

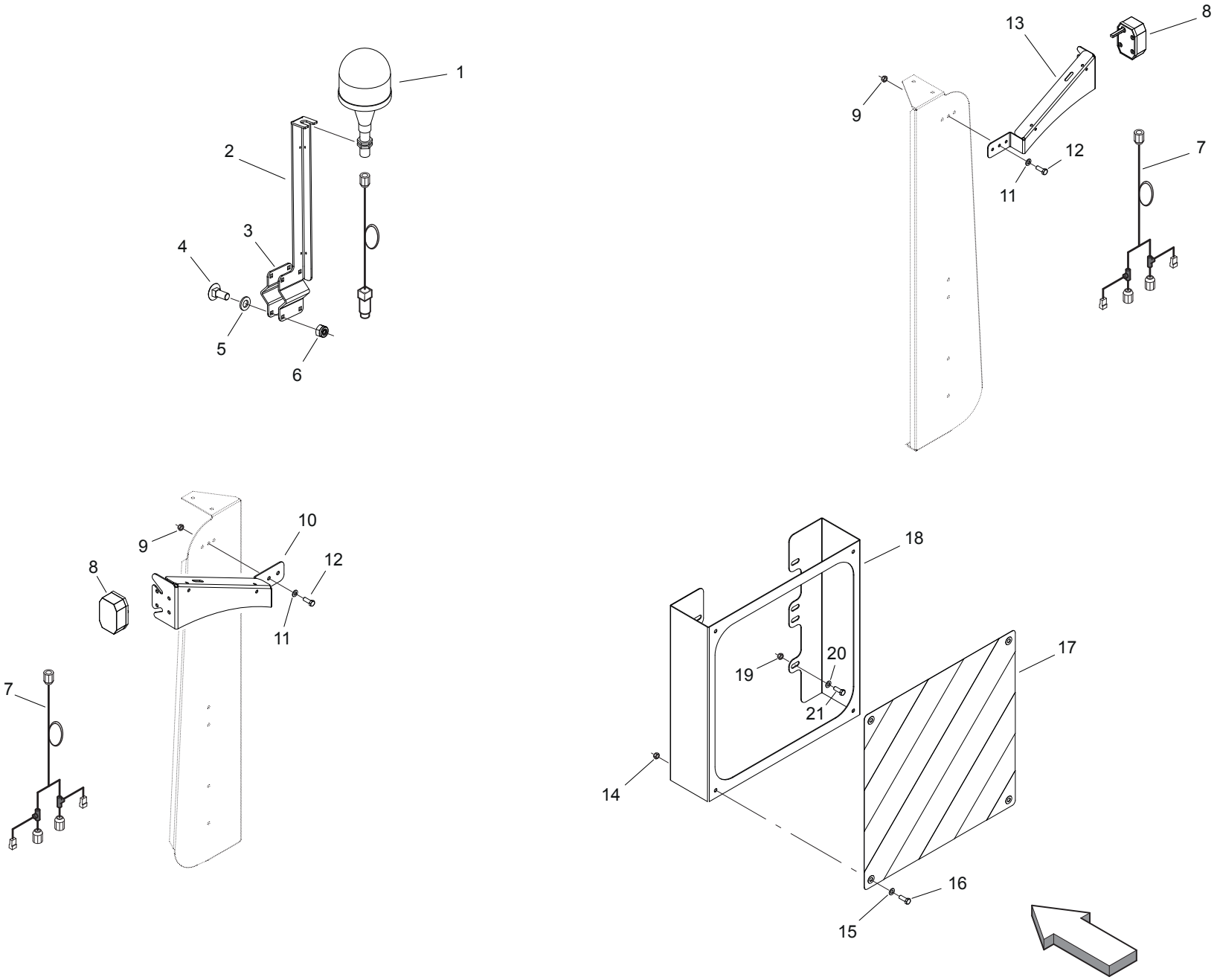

MASCHIO

cod. F07022338

KIT LAMPEGGIANTE + ECCEZIONALE
FLASHING + EXCEPTIONAL KIT

TAV_355

Pos.	Cod.	Descrizione	Description	Description	Benennung	Descripcion
1	B0E0P0153R	LAMPEGGIANTE	FLASHING			INTERMITENTE
2	B0C1P1671R	PIASTRA SUPP.LAMPEGGIANTE 265	PLATE SUPPORT BLINKING 265			PLACA DE SOP. INTERMITENTE 265
3	B0C1P1672R	PIASTRA DI CHIUSURA	CLOSING PLATE			PLACA DE CIERRE
4	F01060101R	VITE M12X1,75X30 U5731 8.8ZN	NUT M12X1,75X 30 U5732 4.6 ZN			TORNILLO M12X1,75X30 U5731
5	F01410076R	ROS.M12 13X 24X2,5 U6592 ZN	WASHER 12 13X 24X2,5 U6592 ZN	RONDEL. M12 13X24X2,5 U6592 ZN	SCHEIBE M12 13X24X2,5 U6592 ZN	ARAND.M12 13X 24X2,5 U6592 ZN
6	F01230213R	DADO M12X1,75 U7474 CL8 ZN	NUT M12X1,75 U7474 6SZN	ECROU AUTOBL. M12	SELBSTSPERR.MUTTER M12	TUERCA M12X1,75 U7474 CL8 ZN
7	F05200818R	CABL LUCE INGOMBRO PER 265	WIRING LIGHT OBSTRUCT.FOR 265			CABLE LUZ ESPACIO OCUPADO PA
8	F05011803R	LUCE INGOMBRO FLEXILED	LIGHT OBSTRUCTION FLEXILED			LUZ ESPACIO OCUPADO FLEXILED
9	F01230184R	DADO M6X1 D985 8ZN	NUT M6X1 D985 8ZN			TUERCA M6X1 D985 8
10	B0C1P1617R	STAFFA LUCI INGOMBRO SX	BRACKET LIGHTS OBSTRUCT.LEFT			ESTRIBO LUCES ESPACIO OCUPAD
11	F01410037R	ROS.M6 6,4X12,5X1,6 U6592 ZN	WASHER M6 6,4X12,5X1,6 U6592ZN	RONDEL.M6 6,4X12,5X1,6 U6592ZN	SCHEIB.M6 6,4X12,5X1,6 U6592ZN	ARAND.M6 6,4X12,5X1,6 U6592 ZN
12	F01020404R	VITE M6X1X20 U5739 8.8ZN	SCREW M6X1X20 U5739 8.8ZN	VIS M6X1X20 U5739 8.8ZN	SCHRAUBE M6X1X20 U5739 8.8ZN	TORNILLO M6X1X20 U5739 8.8ZN
13	B0C1P1618R	STAFFA LUCI INGOMBRO DX	BRACKET LIGHTS OBSTRUCT.RIGHT			ESTRIBO LUCES ESPACIO OCUPAD
14	F01200244R	DADO M8X1,25 U5588 CL8 ZN	NUT M8X1,25 U5588 6.8ZN	ECROU M8 X1,25 U5588 6.8 ZN	MUTTER M8 X1,25 U5588 6.8 ZN	TUERCA M8X1,25 U5588 CL8 ZN
15	F01410051R	ROS.M8 8,4X 17X1,6 U6592 ZN	WASHER M8 8,4X17X1,6 U6592 ZN	RONDELLE M8 8,4X17X1,6 ZN	SCHEIBE M8 8,4X17X1,6 U6592 ZN	ARAND.M8 8,4X 17X1,6 U6592 ZN
16	F01020432R	VITE M8X1,25X16 U5739 8.8ZN	SCR. M8X1,25X16 U5739 8.8ZN	VIS M8 X1,25X16 U5739 8.8 ZN	SCHRAUBE M8X1,25X16U5739 8.8ZN	TORNILLO M8X1,25X16 U5739 8.8
17	B0E0P0204R	PANNELLO POST RB 50X50	REAR PANEL RB 50X50			PANEL TRAS RB 50X50
18	B0C1P1615R	SUPPORTO SEGNALE INGOMBRO 265	SUPPORT SIGNAL OBSTRUCTION 265			SOPORTE SE AL ESPACIO OCUPAD
19	F01230045R	DADO M10X1,5 D982 6ZN	NUT M10X1,5 D982 6ZN	ECROU AUTO-FREINES M10X1,5D982	SICHERUNGSMUTT.M10X1,5 D982 ZN	TUERCA M10X1,5 D982 6
20	F01410062R	ROS.M10 10,5X 18X 2 U6592 ZN	WASHER M10 10,5X 18X 2 U6592	RONDELLE M10 10,5X18X2 ZN	DICHTUNGSRING M10 10,5X18X2 ZN	ARAND.M10 10,5X 18X 2 U6592 ZN
21	F01020472R	VITE M10X1,5X25 U5739 8.8ZN	SCR. M10X1,5X25 U5739 8.8ZN	VIS M10X1,5X25 U5739 8.8 ZN	SCHRAUBE M10X1,5X25 U5739 8.8	TORNILLO M10X1,5X25 U5739 8.8

B995PP004 (n.13)

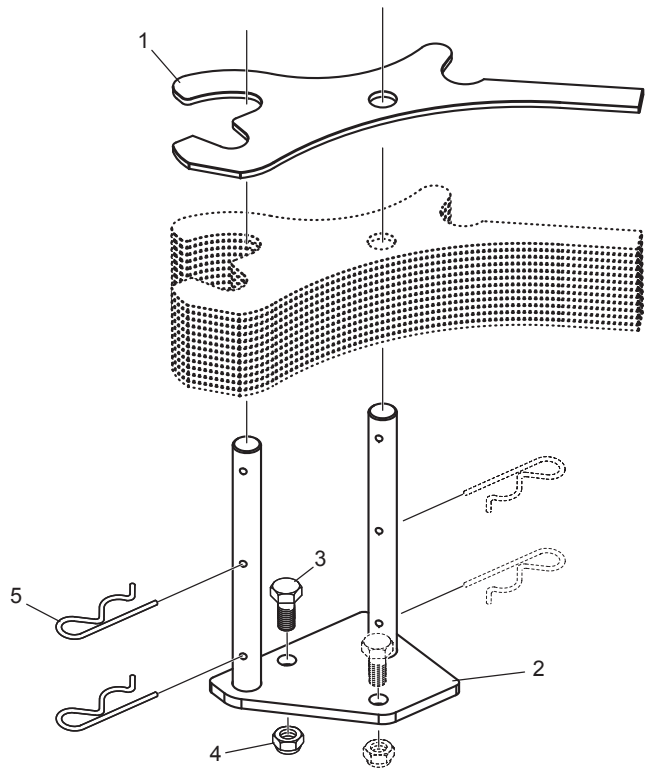

B995KP005 (n.25)

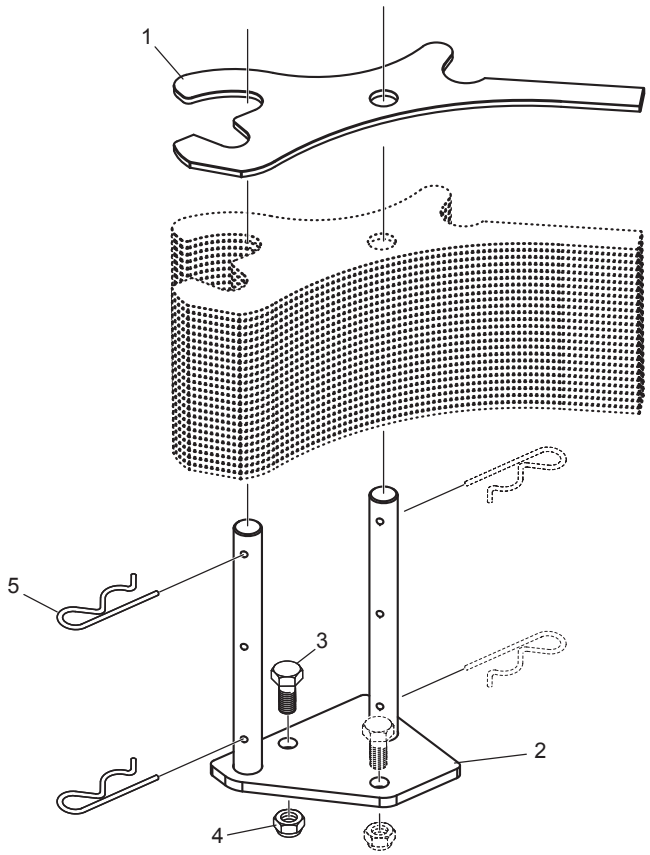

KIT FINTI COLTELLI
FAKE KINIVES KIT

TAV_380

Pos.	Cod.	Descrizione	Description	Description	Benennung	Descripcion
1	B0C005006R	FINTO COLT. CUT	BLANK KNIFE CUT	FAUX COUTEAU CUT	BLINDMESSER CUT	CUCHILLO FALSO CUT
2	B07S01896R	PORTA COLT. NEW	NEW KNIVES HOLDER	PORTE-COUTEAUX NEW		PUERTA CUCH. NEW
3	F01020510R	VITE M12X1,75X30 U5739 8.8ZN	SCR. M12X1,75X30 U5739 8.8ZN	VIS M12X1,75X30 U5739 8.8ZN	SCHRAU.M12X1,75X30 U5739 8.8ZN	TORNILLO M12X1,75X30 U5739
4	B00920412R	DADO M12X1,75 D985 8 ZN	NUT	ECROU	SELBSTSICHERNDE MUTTER M12-5S	
5	F02200374R	COPIGLIA R 4X 82 ZN	SPRING SPLIT PIN 4X82	GOUPILLE 4X82	SPLINT 4X82	PASADOR 4X82

TAV_315

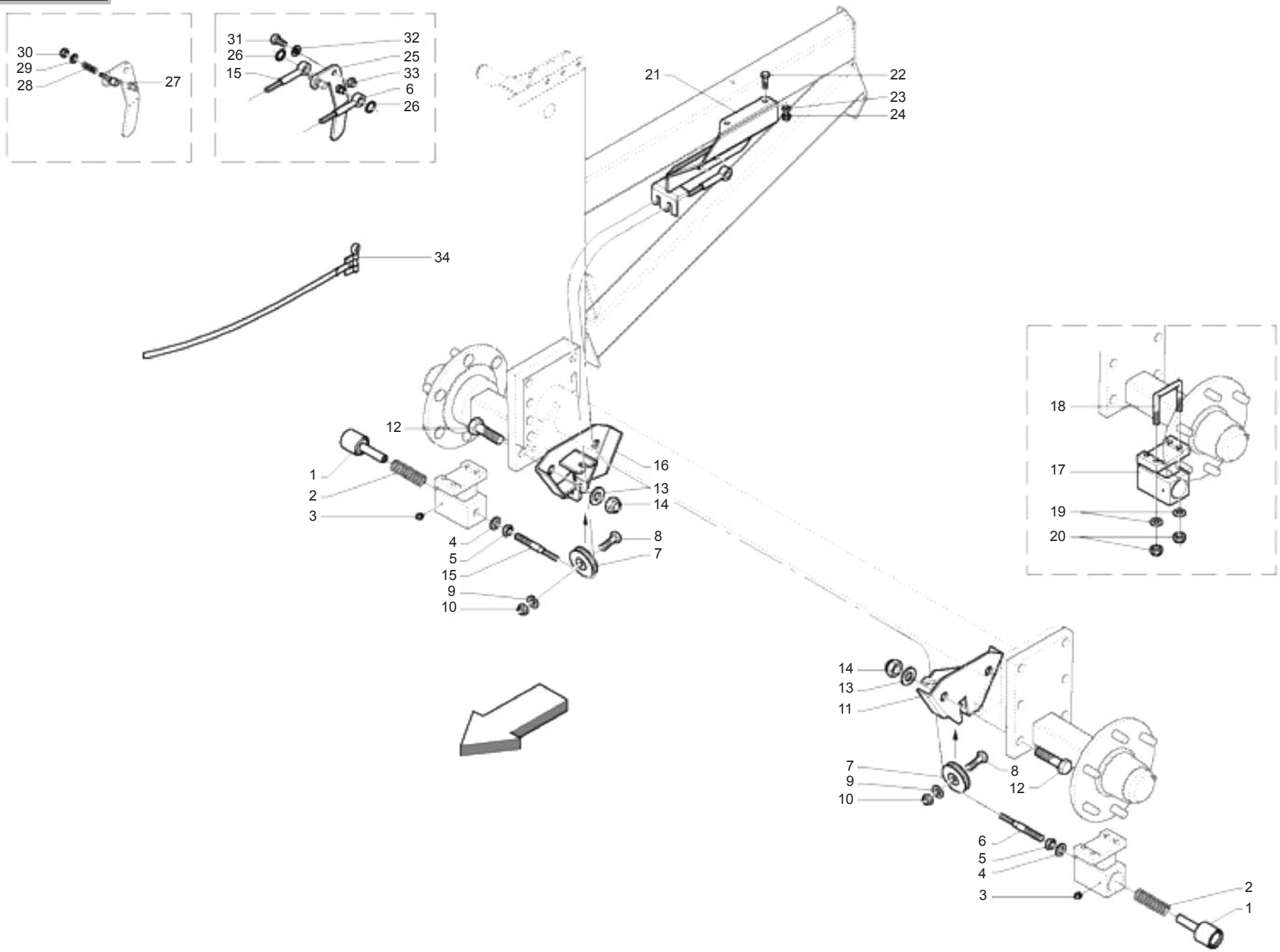

MASCHIO

cod. F07022338

DISPOSITIVO DI STAZIONAMENT MECCANICO
MECHANICAL PARKING DEVICE

TAV_315

Pos.	Cod.	Descrizione	Description	Description	Benennung	Descripcion
1	B013P0003R	PERNO	PIN	TOURILLON	ZAPFEN	PERNO
2	B01830231R	MOLLA	SPRING	RESSORT	FEDER	MUELLE
3	B04200610R	INGRASS.A SFERE M6X1 LUNGO	GREASE NIPPLE	GRAISSEUR HYDRAULIQUE	GERADER SCHMIERNIPPEL M6X1	ENGRASADOR DE ESFERAS M6X1
4	F01420060R	ROS.M10 10,5X 30X2,5 U6593 ZG	GALV.WASHER 10,5X30X2,5 U6593	RONDELLE 10,5X30	SCHEIBE 10,5X30	ARAND.M10 10,5X 30X2,5 U6593
5	F01200270R	DADO M10X1,5 U5588 CL8 ZN	NUT M10X1,5 U5588 6.8ZN	ECROU M10X 1,5 U5588 6.8 ZN	MUTTER M10X 1,5 U5588 6.8 ZN	TUERCA M10X1,5 U5588 CL8 ZN
6	B07J00011R	CAVO DI COM. 4	CONTROL CABLE DIAM. 4	CABLE DE COMMANDE DIAM. 4	STEUERUNGSKABEL	CABLE DE MANDO 4
7	B038P0001R	CARRUCOLA PER FUNE	PULLEY FOR ROPE	POULIE	LAUFROLLE	POLEA PARA CABLE
8	F01020114R	VITE M10X1,5X50 U5737 8.8ZN	SCR. M10X1,5X50 U5737 8.8ZN	VIS M10X 1,5X50 U5737 8.8 ZN	SCHRA.M10X 1,5X50 U5737 8.8 ZN	TORNILLO M10X1,5X50 U5737 8.8
9	F01410062R	ROS.M10 10,5X 18X 2 U6592 ZN	WASHER M10 10,5X 18X 2 U6592	RONDELLE M10 10,5X18X2 ZN	DICHTUNGSRING M10 10,5X18X2 ZN	ARAND.M10 10,5X 18X 2 U6592 ZN
10	F01230202R	DADO M10X 1,5 D985 8 ZN	NUT M10 D985	ECROU AUTOBL. M10	SELBSTSPERR.MUTTER M10	TUERCA M10X 1,5 D985 8
11	B07SP0006R	ATTACCO CARRUCOLA SX	LEFT PULLEY ATTACHMENT	ATTELAGE POULIE GAUCHE	ANSCHLUSS LAUFROLLE LINKS	CONEXI N POLEA IZQ.
12	F01020986R	VITE M20X2,5X60 U5737 8.8 ZN	SCREW M20X2,5X60 U5737 8.8 ZN	HELI. M20X2,5X60 U5737 8.8 ZN	SCHRA. M20X2,5X60 U5737 8.8 ZN	TORNILLO M20X2,5X60 U5737 8.8
13	F01410124R	ROS.M20 21X 37X 3 U6592 ZN	WASHER M20 21X 37X 3 U6592 ZN	RONDEL.M20 21X37X3 ZN	MUTTER M20 21X 37X 3 U6592 ZN	ARAND.M20 21X 37X 3 U6592 ZN
14	F01230259R	DADO M20X 2,5 U7474 CL.8 ZN	NUT M20X 2,5 U7474 CL.8 ZN			TUERCA M20X 2,5 U7474 CL.8
15	B07J00010R	CAVO D1 COM. 4	CONTROL CABLE DIAM. 4	CABLE DE COMMANDE DIAM.4	STEUERUNGSKABEL	CABLE D1 MANDO. 4
16	B07SP0005R	ATTACCO CARRUCOLA DX	RIGHT PULLEY ATTACHMENT	ATTELAGE POULIE DROIT	ANSCHLUSS LAUFROLLE RECHTS	CONEXI N POLEA DER.
17	B07SP0004R	SOSTEGNO CORSOIO	SLIDER SUPPORT	SUPPORT COULISSE	HALTER	SOPORTE DE CARRIL
18	B00500081R	CAVALLOTTO 60X60 M12 ZINCATO	U-BOLT 60X60 M12	BOULON 60X60 M12	BUEGELBOLZEN 60X60 M12	PUENTE 60X60 M12 CINCADO
19	F01410076R	ROS.M12 13X 24X2,5 U6592 ZN	WASHER 12 13X 24X2,5 U6592 ZN	RONDEL. M12 13X24X2,5 U6592 ZN	SCHEIBE M12 13X24X2,5 U6592 ZN	ARAND.M12 13X 24X2,5 U6592 ZN
20	F01230213R	DADO M12X1,75 U7474 CL8 ZN	NUT M12X1,75 U7474 6SZN	ECROU AUTOBL. M12	SELBSTSPERR.MUTTER M12	TUERCA M12X1,75 U7474 CL8 ZN
21	B07SP0008R	ATTACCO MANIGLIA	HANDLE ATTACHMENT			CONEXI N DE LA MANIJA
22	B00191040R	VITE M10X1,5 X 40 U5737 8.8ZN	SCREW	VIS	SCHRAUBE	TORNILLO M10X1,5 X 40 U5737 8
23	F01410062R	ROS.M10 10,5X 18X 2 U6592 ZN	WASHER M10 10,5X 18X 2 U6592	RONDELLE M10 10,5X18X2 ZN	DICHTUNGSRING M10 10,5X18X2 ZN	ARAND.M10 10,5X 18X 2 U6592 ZN
24	F01230202R	DADO M10X 1,5 D985 8 ZN	NUT M10 D985	ECROU AUTOBL. M10	SELBSTSPERR.MUTTER M10	TUERCA M10X 1,5 D985 8
25	B07SP0007R	MANIGLIA CON SPINA	HANDLE WITH PIN			MANIJA CON CLAVIJA
26	F02050651R	ANELLO E. DE 10X 1 U7435 C70	SEEGER RING ARR.10 U7435-75	SEEGER ARR. 10 UNI 7435-75	SEEGERING ARR.10 UNI 7435-75	ANILLO E. DE 10X 1 U7435 C70
27	B005P0001R	SPINA DI SICUREZZA	SAFETY PIN	EPINE DE SURETE	SICHERHEITSSTIFT	CLAVIJA DE SEGURIDAD
28	B01821993R	MOLLA	SPRING	RESSORT	FEDER	MUELLE
29	F01420048R	ROS.M8 8,4X 24X 2 U6593 ZN	WASHER M8 8,4X 24X2 U6593 ZN	RONDELLE M8 8,4X24X 2 U6593 ZN	SCHEIBEN M8 8,4X24X 2 U6593 ZN	ARAND.M8 8,4X 24X 2 U6593 ZN
30	B00920208R	DADO AUTOB.BASSO M 8-5S D985	NUT M8X1 D985 8ZN	ECROU	SELBSTSICHERNDE MUTTER M8-5S	TUERCA M8X1 D985 8
31	F01020152R	VITE M12X1,75X40 U5737 8.8ZN	SCR. M12X1,75X40 U5737 8.8ZN	VIS M12X1,75X40 U5737 8.8 ZN	SCHRAUBE M12X1,75X40U57378.8ZN	TORNILLO M12X1,75X40 U5737 8.
32	F01410076R	ROS.M12 13X 24X2,5 U6592 ZN	WASHER 12 13X 24X2,5 U6592 ZN	RONDEL. M12 13X24X2,5 U6592 ZN	SCHEIBE M12 13X24X2,5 U6592 ZN	ARAND.M12 13X 24X2,5 U6592 ZN
33	F01230213R	DADO M12X1,75 U7474 CL8 ZN	NUT M12X1,75 U7474 6SZN	ECROU AUTOBL. M12	SELBSTSPERR.MUTTER M12	TUERCA M12X1,75 U7474 CL8 ZN
34	B0E000061R	FASCETTA A COPPIGLIA	STEEL HOSE CLAMP			ABRAZADERA CON PASADOR

TAV_320

SOLO ITALIA
ONLY ITALY

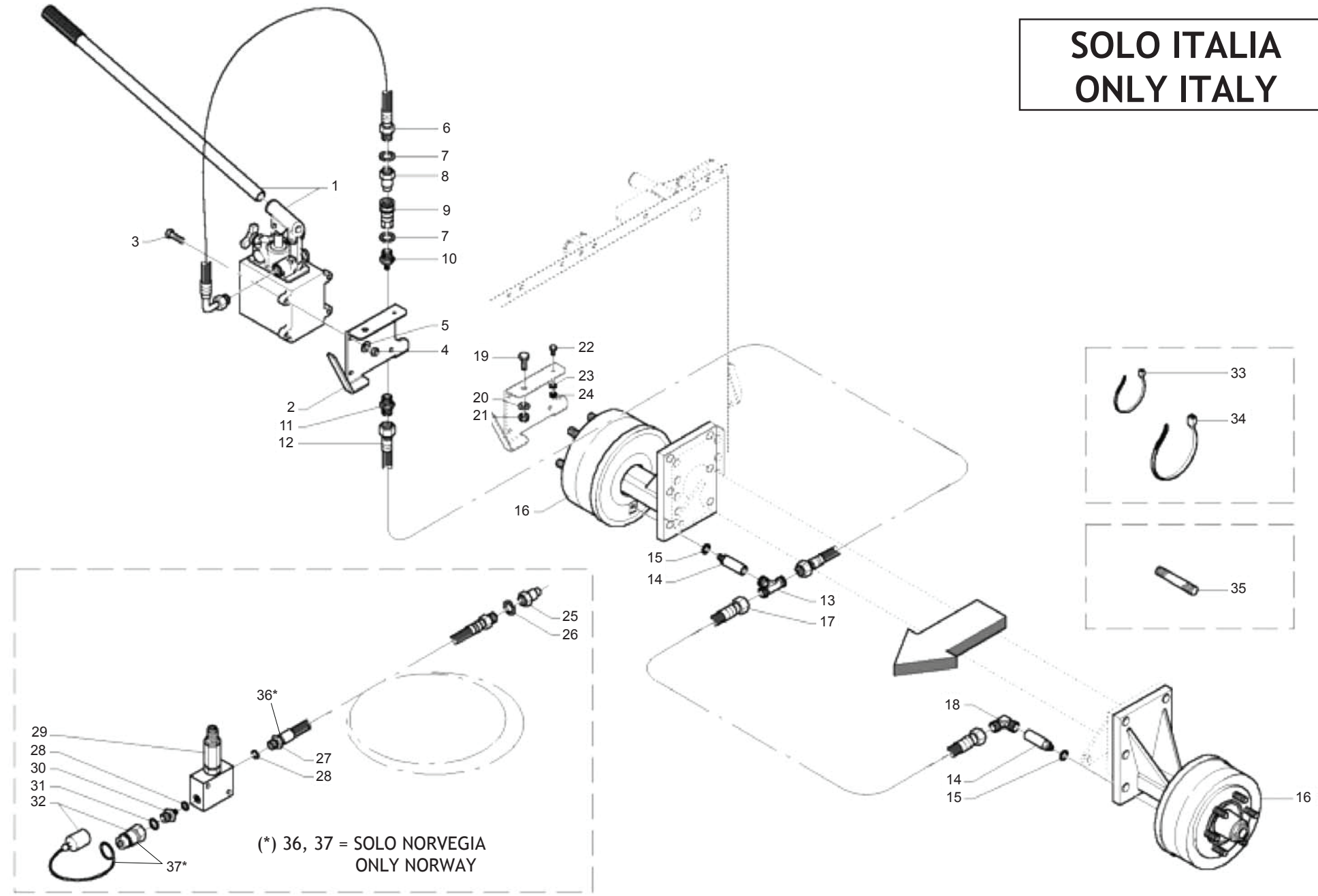

MASCHIO

cod. F07022338

DISPOSITIVO STAZIONAMENTO IDRAULCO (CUT)
HYDRAULIC PARKING DEVICE (CUT)

TAV_320

Pos.	Cod.	Descrizione	Description	Description	Benennung	Descripcion
1	B0H400107R	POM.MANO HPT 12 CAPACITA SERBA	HAND PUMP HPT12C	POMPE A MAIN HPT	HANDPUMPE HPT12C	BOMBA MANO HPT 12 CAPACIDAD
2	B0C4P0002R	SOSTEGNO POMPA A MANO	MANUAL PUMP SUPPORT	SUPPORT POMPE A MAIN	EISENWINKEL	SOPORTE BOMBA DE MANO
3	F01020065R	VITE M 8X1,25X 30 U5737 8.8ZN	SCREW M 8X1,25X 30 U5737 8.8Z			TORNILLO M 8X1,25X 30 U5737 8.
4	F01410051R	ROS.M8 8,4X 17X1,6 U6592 ZN	WASHER M8 8,4X17X1,6 U6592 ZN	RONDELLE M8 8,4X17X1,6 ZN	SCHEIBE M8 8,4X17X1,6 U6592 ZN	ARAND.M8 8,4X 17X1,6 U6592 ZN
5	B00920208R	DADO AUTOB.BASSO M 8-5S D985	NUT M8X1 D985 8ZN	ECROU	SELBSTSICHERNDE MUTTER M8-5S	TUERCA M8X1 D985 8
6	B0H000206R	TUBO R16 1 4 STRONGER 1 L410	HYDR HOSE WITH FITTING L=410	TUYAU HYDRAULIQUE AVEC RACCORD	HYDRHES ROHR L=410	TUBO R16 1 4 STRONGER 1 L410
7	F01440094R	RONDELLA ALLUMINIO D10	WASHER D10 ALUMINIUM	RONDELLE D10 AL	SCHIEBE D10 ALUMIN	ARANDELA DE ALUMINIO D10
8	B0H000207R	INNESTO RAPIDO 1 4 MASCHIO	FAST CLUTCH 1 4 MALE	EMBRAYAGE RAPIDE 1 4 MALE	KUPPLUNG 1 4	CONEXI N R PIDA 1 4 MACHO
9	B0H000208R	INNESTO RAPIDO 1 4 FEMMINA	FAST CLUTCH 1 4 FEMALE	EMBRAYAGE RAPIDE 1 4 FEMELLE	KUPPLUNG 1 4	CONEXI N R PIDA 1 4 HEMBRA
10	B0H000284R	RAC. I 10 TN126GG-10LR	I FITTING TN 126GG-10LR	RACCORD I 10	KUPPLUNG I 10 HARKEN	RAC. I 10 TN126GG-10LR
11	B0H000153R	RACC. I 10 SOLO CORPO RASTELLI	CONNECTION	RACCORD I 10 SEULEMENT CORPS	ANSCHLUSS I 10	EMP. I 10 SOLO CUERPO MARCA RA
12	B0H000033R	TUBO IDRAUL. L=1000	HYDR. TUBE	TUYAU HYDRAULIQUE L=1000	HYDR.SCHLAUCH L=1000	TUBO HIDR UL. L=1000
13	B0H000144R	RACCORDO T 10 TN96-10LR	UNION TEE 10	RACCORD T	KUPPLUNG HARKE	RACOR EN T 10 TN96-10LR
14	B0H000162R	MANICOTTO DI RACCORDO	FITTING SLEEVE	MANCHON DE RACCORD	ANSCHLUSS	MANGUITO DE RACOR
15	B01441415R	RONDELLA IN RAME 1 4	WASHER	RONDELLE	BEILAGSCHEIBE 1 4 13X19X1,5	ARANDELA DE COBRE 1 4
16	B07100031R	MOZZO CON FRENO	HUB WITH BRAKE	MOYEU AVEC FREIN	RADACHSE MIT BREMSE	BUJE CON FRENO SPRINTER NEW
17	B0H000091R	TUBO FLEX SAE 100 R1AT1 4L2050	FLEXIBLE TUBE SAE 100 R1AT	TUYAU FLEXIBLE SAE 100 R1AT 1	ROEHRE FLEX SAE 100 R1AT 1 4	TUBO FLEX SAE 100 R1AT1 4L2050
18	B0H000086R	RACCORDO L 10 TN94-10LR	UNION L 10	RACCORD L 10	ANSCHLUSSSTUECK L 10	RACOR L 10 TN94-10LR
19	F01020472R	VITE M10X1,5X25 U5739 8.8ZN	SCR. M10X1,5X25 U5739 8.8ZN	VIS M10X1,5X25 U5739 8.8 ZN	SCHRAUBE M10X1,5X25 U5739 8.8	TORNILLO M10X1,5X25 U5739 8.8
20	F01410062R	ROS.M10 10,5X 18X 2 U6592 ZN	WASHER M10 10,5X 18X 2 U6592	RONDELLE M10 10,5X18X2 ZN	DICHTUNGSRING M10 10,5X18X2 ZN	ARAND.M10 10,5X 18X 2 U6592 ZN
21	F01230202R	DADO M10X 1,5 D985 8 ZN	NUT M10 D985	ECROU AUTOBL. M10	SELBSTSPERR.MUTTER M10	TUERCA M10X 1,5 D985 8
22	B00180625R	VITE M6X1X 25 U5739 8.8ZN	SCREW	VIS	SCHRAUBE	TORNILLO M6X1X 25 U5739 8.8ZN
23	F01410037R	ROS.M6 6,4X12,5X1,6 U6592 ZN	WASHER M6 6,4X12,5X1,6 U6592ZN	RONDEL.M6 6,4X12,5X1,6 U6592ZN	SCHEIB.M6 6,4X12,5X1,6 U6592ZN	ARAND.M6 6,4X12,5X1,6 U6592 ZN
24	F01230184R	DADO M6X1 D985 8ZN	NUT M6X1 D985 8ZN			TUERCA M6X1 D985 8
25	B0H000207R	INNESTO RAPIDO 1 4 MASCHIO	FAST CLUTCH 1 4 MALE	EMBRAYAGE RAPIDE 1 4 MALE	KUPPLUNG 1 4	CONEXI N R PIDA 1 4 MACHO
26	F01440094R	RONDELLA ALLUMINIO D10	WASHER D10 ALUMINIUM	RONDELLE D10 AL	SCHIEBE D10 ALUMIN	ARANDELA DE ALUMINIO D10
27	B0H0P0001R	TUBO IDRAUL. L=5500	HYDRAULIC HOSE L=5500	TUYAU HYDRAULIQUE L=5500	HYDRAULISCHES ROHR L=5500	TUBO HIDR UL. L=5500
28	B01441815R	ROS. 17 X23X1,5 RAME -3 8	WASHER	RONDELLE	SCHEIBE	ARAND. 17 X23X1,5 COBRE -3
29	B0H000143R	VALV. DI RID. VRPRL2B38TS.SR	REDUCTION VALVE	VALVE DE REDUCTION VRPRL2B38TS	VENTIL	V LV. DE RED. VRPRL2B38TS.SR
30	B0H6000ABR	NIPPLO RIDUZ.1 2 -3 8 RASTEL	NIPPLE	NIPPLE REDUCTION 1 2 - 3 8		NIPLE REDUCC.1 2 -3 8 RASTEL
31	B01442015R	ROS. 21 X27X1,5 RAME -1 2	WASHER	RONDELLE	BEILAGSCHEIBE 1 2	ARAND.21 X27X1,5 COBRE -1 2
32	B0H6000A0R	INNESTO RAP.NV 12GAS-M	QUICK CLUTCH	EMBRAYAGE	SCHNELLKUPPLUNG	ACOPLAMIENTO R P.NV 12GAS-M
33	F05150055R	FASCETTA POLYA. 3,6X200 NERA	WHITE BAND	BANDE BIANCHE	WEIBE BAND	BANDA POLYA. 3,6X200 NEGRA
34	B0E600022R	FASCETTA LUMEFIX 4,8X340	CLAMP LUMEFIX 4,8X340			ABRAZADERA LUMEFIX 4,8X340
35	B005P0005R	PRIGIONIERO M20 108	STUD BOLT	PRISONNIER	STIFTSCHRAUBE	TORNILLO PRISIONERO M20 108
36	B0H000097R	TUBO R1T 1 4 L. 5500	FLEXIBLE TUBE SAE 100 R1AT	TUYAU FLEXIBLE SAE 100 R1AT 1	ROEHRE FLEX SAE 100 R1AT 1 4	TUBO R1T 1 4 L. 5500
37	B0H000223R	INNESTO RAP FEM VF0 12 GAS	INNESTO RAP FEM VF0 12 GAS .	EMBRAYAGE RAPIDE FEMELLE		CONEXI N R P HEM VF0 12 GAS

TAV_325

(*) 18 = SOLO NORVEGIA
ONLY NORWAY

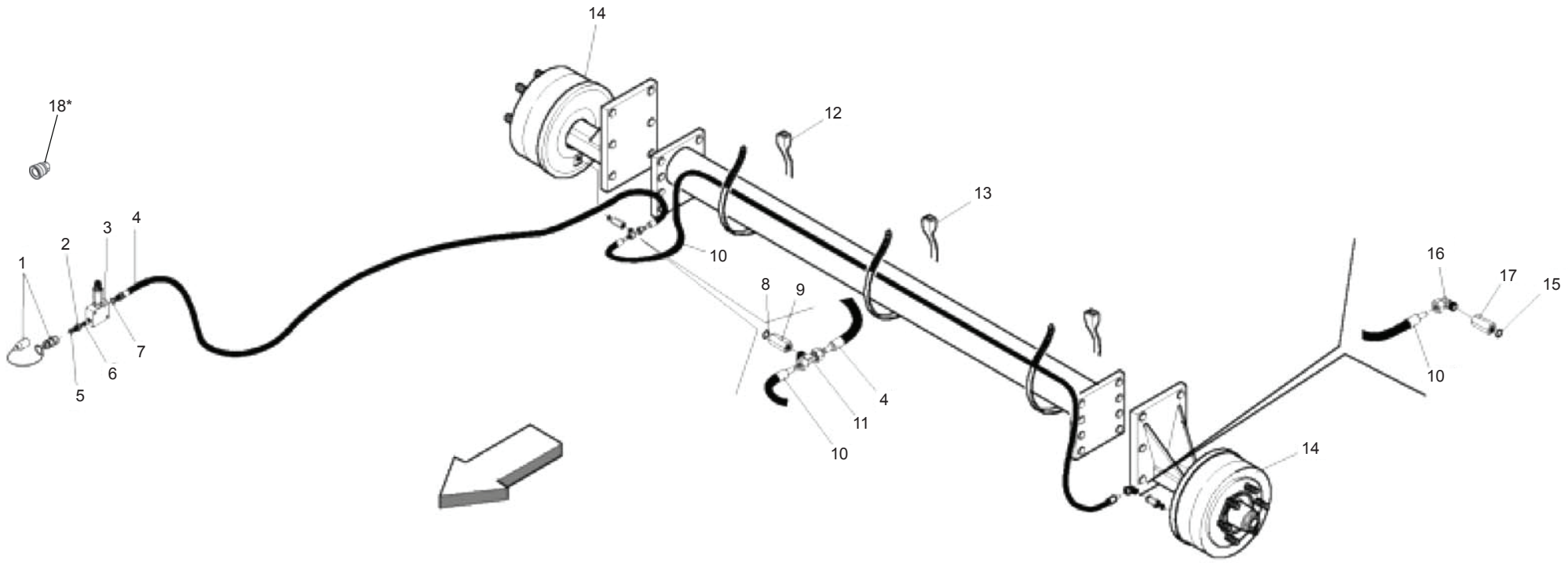

FRENO IDRAULICO (NO OMOLOGAZIONE ITALIA)
HYDRAULIC BRAKE (NO ITALY APPROVAL)

TAV_325

Pos.	Cod.	Descrizione	Description	Description	Benennung	Descripcion
1	B0H6000A0R	INNESTO RAP.NV 12GAS-M	QUICK CLUTCH	EMBRAYAGE	SCHNELLKUPPLUNG	ACOPLAMIENTO R P.NV 12GAS-M
2	B0H6000ABR	NIPPLO RIDUZ.1 2 -3 8 RASTEL	NIPPLE	NIPPLE REDUCTION 1 2 - 3 8		NIPLE REDUCC.1 2 -3 8 RASTEL
3	B0H000143R	VALV. DI RID. VRPRL2B38TS.SR	REDUCTION VALVE	VALVE DE REDUCTION VRPRL2B38TS	VENTIL	V LV. DE RED. VRPRL2B38TS.SR
4	B0H000097R	TUBO R1T 1 4 L. 5500	FLEXIBLE TUBE SAE 100 R1AT	TUYAU FLEXIBLE SAE 100 R1AT 1	ROEHRE FLEX SAE 100 R1AT 1 4	TUBO R1T 1 4 L. 5500
5	B01442015R	ROS. 21 X27X1,5 RAME -1 2	WASHER	RONDELLE	BEILAGSCHEIBE 1 2	ARAND.21 X27X1,5 COBRE -1 2
6	B01441815R	ROS. 17 X23X1,5 RAME -3 8	WASHER	RONDELLE	SCHEIBE	ARAND. 17 X23X1,5 COBRE -3
7	B01441815R	ROS. 17 X23X1,5 RAME -3 8	WASHER	RONDELLE	SCHEIBE	ARAND. 17 X23X1,5 COBRE -3
8	B01441415R	RONDELLA IN RAME 1 4	WASHER	RONDELLE	BEILAGSCHEIBE 1 4 13X19X1,5	ARANDELA DE COBRE 1 4
9	B0H000162R	MANICOTTO DI RACCORDO	FITTING SLEEVE	MANCHON DE RACCORD	ANSCHLUSS	MANGUITO DE RACOR
10	B0H000091R	TUBO FLEX SAE 100 R1AT1 4L2050	FLEXIBLE TUBE SAE 100 R1AT	TUYAU FLEXIBLE SAE 100 R1AT 1	ROEHRE FLEX SAE 100 R1AT 1 4	TUBO FLEX SAE 100 R1AT1 4L2050
11	B0H000098R	RACCORDO T 10 TN 127-10LR	UNION T 10	RACCORD T 10	T.VERSCHRAUBUNG	RACOR EN T 10 TN 127-10LR
12	F05150055R	FASCETTA POLYA. 3,6X200 NERA	WHITE BAND	BANDE BIANCHE	WEIBE BAND	BANDA POLYA. 3,6X200 NEGRA
13	B0E600022R	FASCETTA LUMEFIX 4,8X340	CLAMP LUMEFIX 4,8X340			ABRAZADERA LUMEFIX 4,8X340
14	B07100031R	MOZZO CON FRENO	HUB WITH BRAKE	MOYEU AVEC FREIN	RADACHSE MIT BREMSE	BUJE CON FRENO SPRINTER NEW
15	B01441415R	RONDELLA IN RAME 1 4	WASHER	RONDELLE	BEILAGSCHEIBE 1 4 13X19X1,5	ARANDELA DE COBRE 1 4
16	B0H000086R	RACCORDO L 10 TN94-10LR	UNION L 10	RACCORD L 10	ANSCHLUSSSTUECK L 10	RACOR L 10 TN94-10LR
17	B0H000162R	MANICOTTO DI RACCORDO	FITTING SLEEVE	MANCHON DE RACCORD	ANSCHLUSS	MANGUITO DE RACOR
18	B0H000223R	INNESTO RAP FEM VF0 12 GAS	INNESTO RAP FEM VF0 12 GAS .	EMBRAYAGE RAPIDE FEMELLE		CONEXI N R P HEM VF0 12 GAS

TAV_360

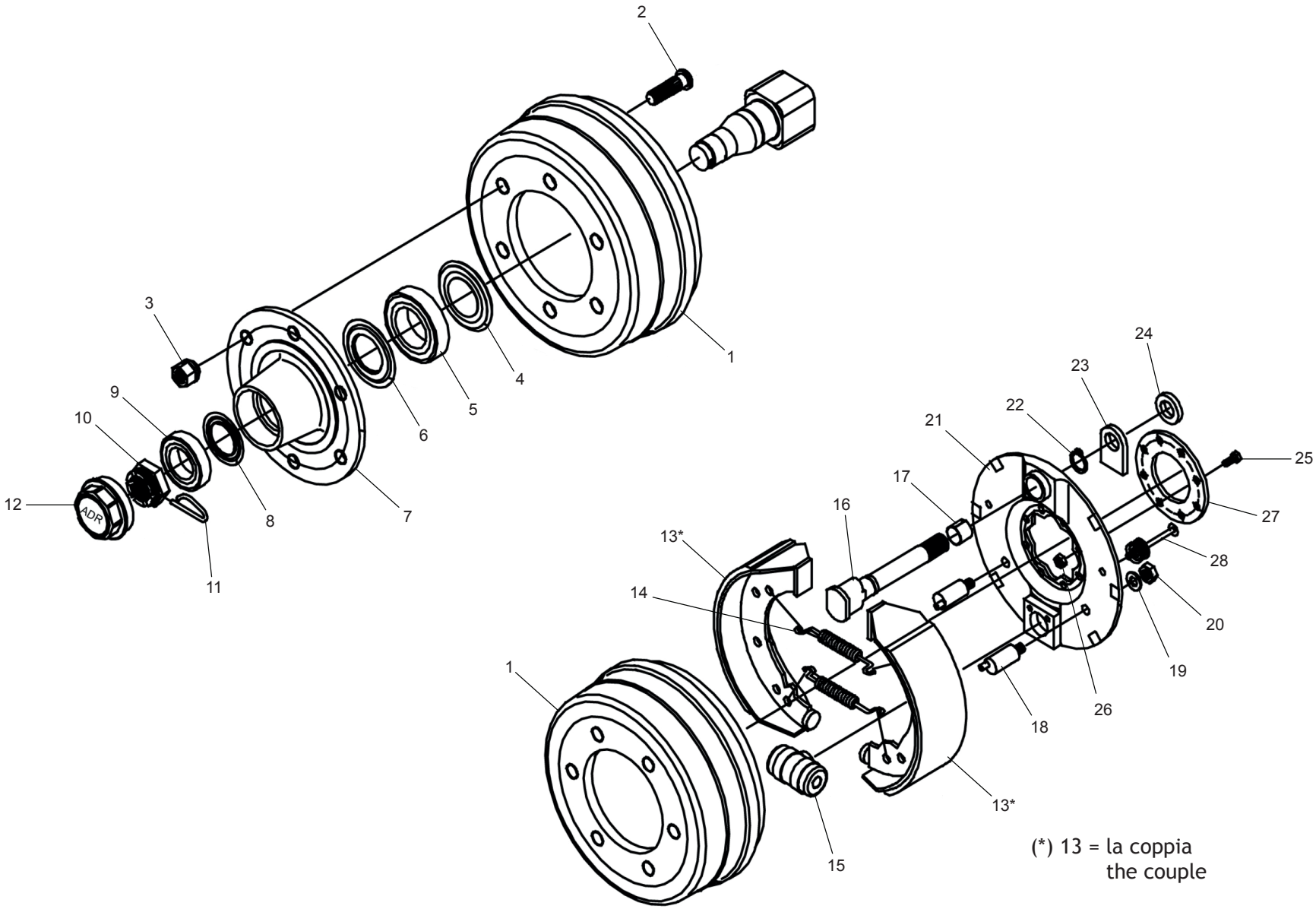
2
3
1
4
5
6
9
10
12
ADR
8
7
11
24
23
22
21
25
17
16
27
13*
28
14
20
19
1
26
18
13*
15
(*) 13 = la coppia
the couple

ESPLOSO MOZZO CON FRENO
HUB WITH BRAKE PARTS

TAV_360

Pos.	Cod.	Descrizione	Description	Description	Benennung	Descripcion
1	B0R001136R	TAMBURO	DRUM			TAMBOR
2	B0R001137R	COLONNETTA	WHEELSTUD			COLUMNA
3	B0R001138R	DADO COLONNETTA	WHEEL NUT			TUERCA DE LA COLUMNA
4	B0R001139R	ANELLO DI TENUTA	RETAINING RING			ANILLO DE RETENCI N
5	B0R001140R	CUSCINETTO	BEARING			COJINETE
6	B0R001141R	ANELLO PARAGRASSO	GREASE RING			ANILLO PARAGRASA
7	B0R001142R	MOZZO	HUB			BUJE
8	B0R001143R	ANELLO PARAGRASSO	GREASE RING			ANILLO PARAGRASA
9	B0R001144R	CUSCINETTO	BEARING			COJINETE
10	B0R001145R	DADO INTAGLI	CROWN NUT			TUERCA RANURAS
11	B0R001146R	SPINA ELASTICA	SPRING PIN			CLAVIJA EL STICA
12	B0R001147R	CALOTTA	CAP			COBERTURA
13	B0R001148R	MASSA FRENO COMPLETA	BRAKESHOES ASSEMBLED			MASA DEL FRENO COMPLETA
14	B0R001149R	MOLLA	SPRING			MUELLE
15	B0R001150R	CILINDRO	CYLINDER			CILINDRO
16	B0R001151R	ALBERO CAMMA	CAM SHAFT			RBOL DE LA LEVA
17	B0R001152R	BOCCOLA	BUSHING			CASQUILLO
18	B0R001153R	PERNO	PIN			PERNO
19	B0R001154R	RONDELLA	WASHER			ARANDELA
20	B0R001155R	DADO	NUT			TUERCA
21	B0R001156R	PIASTRA DI PROTEZIONE	PROTECTION PLATE			PLACA DE PROTECCI N
22	B0R001157R	ANELLO SEEGER	SEEGER RING			ANILLO SEEGER
23	B0R001158R	SUPPORTO	SUPPORT			SOPORTE
24	B0R001159R	RALLA	FIFTH WHEEL			RANGUA
25	B0R001160R	VITE	SCREW			TORNILLO
26	B0R001161R	DADO	NUT			TUERCA
27	B0R001162R	FLANGIA	FLANGE			BRIDA
28	B0R001163R	PERNO MOLLA	SPRING PIN			PERNO MUELLE

TAV_330

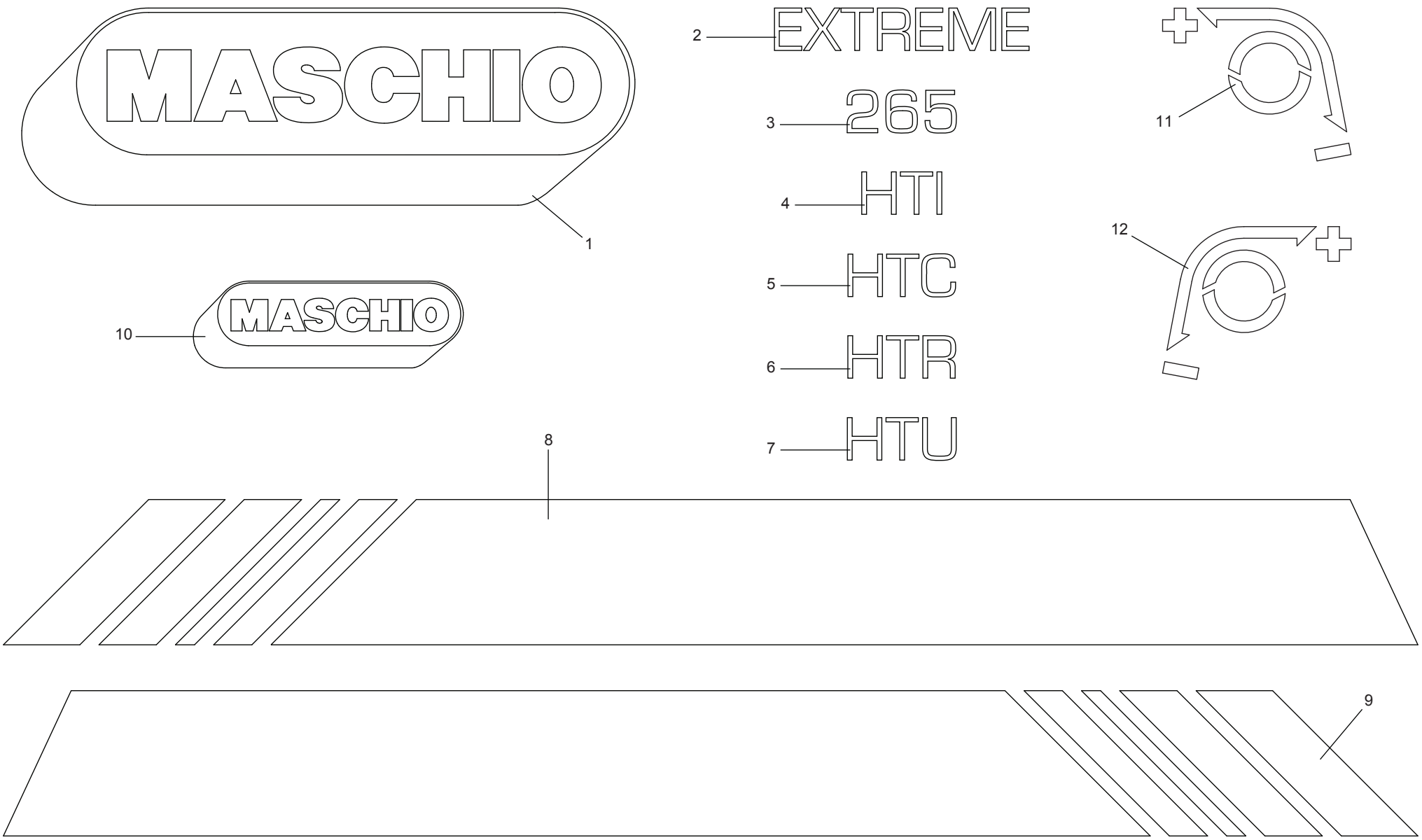
MASCHIO
1
2
EXTREME
3
265
4
HTI
5
HTC
6
HTR
7
HTU
8
9
10
MASCHIO
11
12

DECAL "LOGO"
DECAL "LOGO"

TAV_330

Pos.	Cod.	Descrizione	Description	Description	Benennung	Descripcion
1	F20010506R	ETICH.ID.MASCHIO802X267 BIANCO	ID LABEL MASCHIO 802X267 WHITE	DECAL MASCHIO 802X267 BLANC	AUFKLEBER MASCHIO 802X267 WEI	ETIQU..ID.MACHO802X267 BLANCO
2	F20020560R	ETICHETTA EXTREME	DECAL EXTREME	DECAL EXTREME	AUFKLEBER EXTREME	ETIQUETA EXTREME
3	F20020592R	ETICHETTA 265	DECAL. 265			ETIQUETA 265
4	F20020595R	DECAL. HTI	DECAL. HTI			DECAL. HTI
5	F20020596R	ETICHETTA HTC	DECAL. HTC	DECAL. HTC	AUFKLEBER HTC	ETIQUETA HTC
6	F20020598R	ETICHETTA HTR	DECAL. HTR	DECAL. HTR	AUFKLEBER HTR	ETIQUETA HTR
7	F20020597R	ETICHETTA HTU	DECAL. HTU	DECAL. HTU	AUFKLEBER HTU	ETIQUETA HTU
8	F20020579R	DECAL. FASCIA DX 265	DECAL RIGHT STRIP 265			DECAL. BANDA DER 265
9	F20020580R	DECAL. FASCIA SX 265	DECAL LEFT STRIP 265			DECAL. BANDA IZQ 265
10	F20010503R	ETICH.ID.MASCHIO353X118 BIANCO	ID LABEL MASCHIO 353X118 WHITE			ETIQU.ID.MACHO353X118 BLANCO
11	B07500746R	ET CARTER PU - LATO DX	DECAL CARTER PU -	DECAL CARTER PU - DROIT	AUFKLEBER CARTER PU - RECHTS	ET C RTER PU - LADO DER
12	B07500747R	ET CARTER PU - LATO SX	DECAL CARTER PU -	DECAL CARTER PU - GAUCHE	AUFKLEBER CARTER PU - LINKS	ET C RTER PU - LADO IZQ

1

2

3

4

5

6

7

8

9

10

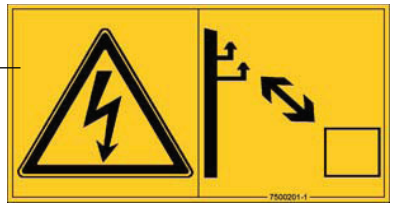
11

12

13

14

15

16

DECAL "CE"
DECAL "CE"

TAV_335

Pos.	Cod.	Descrizione	Description	Description	Benennung	Descripcion
1	B07500185R	ET CONSULT IL LIBRETTO OP.	DECAL SEE OPERATOR S MANUAL	DECAL LIRE LE LIVRE OPERATEU	AUFKLEBE BUCH ANSCHLAGEN	ET CONSULT EL MANUAL OP.
2	B07500186R	ET TOGLIERE LA CHIAVE...	DECAL TAKE THE WRENCH AWAY	DECAL CHASSER LA CLEF	AUFKLEBE SCHLUSSEL ZIEHEN	ET QUITAR LA LLAVE...
3	B07500208R	ET MANO-OLIO SOTTO PRESSIONE	DECAL OIL UNDER PRESSURE HAND	DECAL MAIN-HUILE SOUS PRESSIO	AUFKLEBE HAND-OEL	ET MANO-ACEITE BAJO PRESI N
4	B07500187R	ET 540 GIRI - RICC SX NORMA	DECAL 540RPM - LEFT BURR	DECAL 540 T H-SENS DE ROTATIO	AUFKLEBE 540 RPM	ET 540 REVOLUCIONES -SENTIDO
5	B07500199R	ET PERSONA SCHIACC.-ZONA	DECAL SQUEEZED PERSON	DEECAL PERSONNE ECRASEE -ZONE	AUFKLEBE GEQUETSCHER MANN	ET PERSONA PLASTADO-ZONA
6	B07500203R	ET TAGLIO MANO-STOP NORMA CEE	DECAL HAND CUT _ STOP	DECAL COUPE MAINE - STOP	AUFKLEBE HANDSCHNITT - HALT	ET CORTE MANO-STOP NORMA CE
7	B07500221R	ET PIEDE TAGLI-STARE DISTANTE	WARNING CUT FEET DECAL	DECAL PIED COUPE	AUFKLEBE GESCHNITTER FUSS	ET PIE CORTES MANTENERSE ALE
8	B07500207R	ET PERSONA INTRAPP. PICK-UP	TRAPPED MAN DECAL	DECAL PERSONNE PIEGEE-PICK-UP	AUFKLEBE GEFANGTENER MANN	ET PERSONA ATRAPADA PICK-UP
9	B07500198R	ET PERSONA SCHIAC-SOTTO PORTE	SQUEEZED MAN DECAL	DECAL PERSONNE ECRASE -SOUS	AUFKLEBE GEQUETSCHER MANN	ET PERSONA APLASTADO-BAJO P
10	B07500726R	DECAL TAGLIO MANO-LAMA SPAGO	LABEL CUTTING BLADE HAND-TWINE			DECAL CORTE MANO-CUCHILLA C
11	B07500201R	ET SCOSSA ELETTR NORMA CEE	ELECTRIC SHOCK DECAL	DECAL SECOUSSE ELECTRIQUE	AUFKLEBER STROMSTOSS	ET DESCARGA EL CTRICA NORMA
12	B07500212R	ET PERSONA SCHIACC-BALLA NORM	SQUEEZED MAN-BALE DECAL	DECAL PERSONNE ECRASEE -BALLE	AUFKLEBER GEQUERSCHTER MANN	ET PERSONA APLASTADA BALA NO
13	B07500197R	ET PERSONA SCHIACC-PRES MURO	SQUEEZED MAN DECAL	DECAL PERSONNE RCRASE - PRES	AUFKLEBER GEQUETSCHER MANN	ET PERSONA APLASTADO-TOMA P
14	B07500781R	ET PERICOLO CARDANO	DANGER PTO SHAFT DECAL	DECAL DANGER CARDAN	ABZIEHBILD GEFAHR GELENKWELLE	ET PELIGRO CARD N
15	B07500724R	ET PERS SCHIACC.-BLOCC.PORTE	DECAL	DECAL PERSONNE-ECRASEE - BLOC	AUFKLEBER GEDRUCKTE PERSON	ET PERS APLASTADA BLOQ.PUERT
16	B07500210R	ET MANO SCHIACC-ORGANI SCH	DECAL SQUEEZED HAND _ ORGANS	DECAL MAIN ECRASEE	AUFKLEBE GEQUERSCHTE HAND	ET MANO APLASTADA RGANOS SC

TAV_340

1

2

3

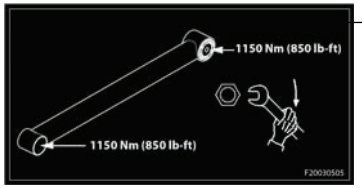

4

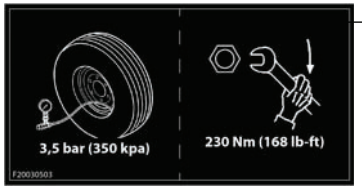

5

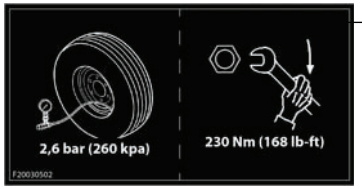

13

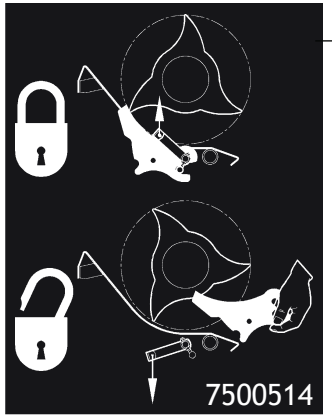

6*

14*

15*

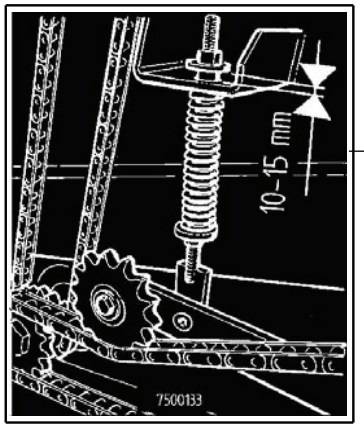

8

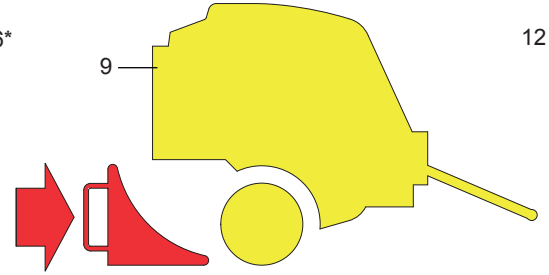
9

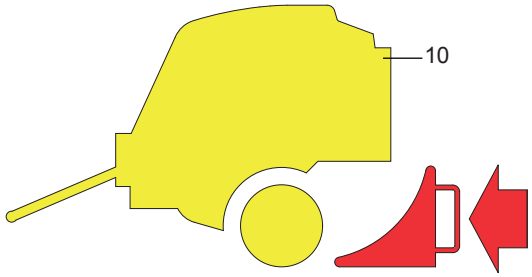
10

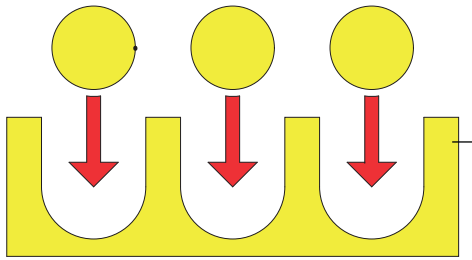
7

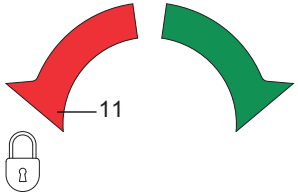
11

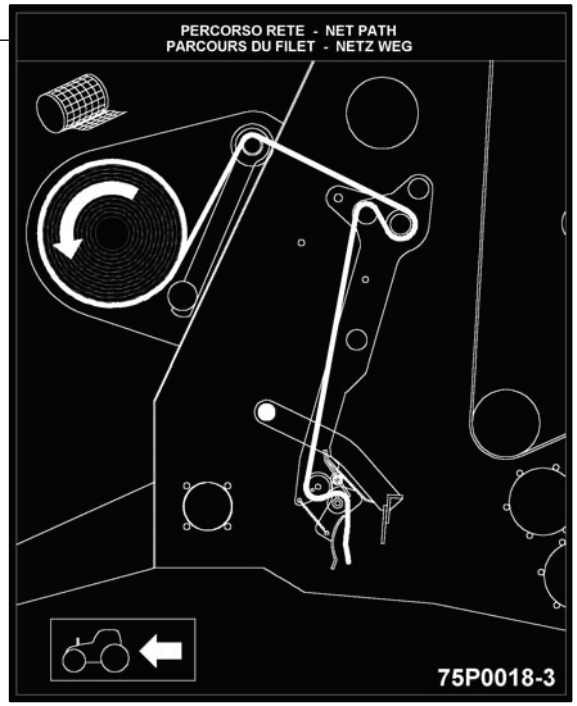

12

(*) 6; 14; 15 = SOLO CUT
ONLY CUT

MASCHIO

DECAL "INSTRUZIONE"
DECAL "INSTRUCTION"

TAV_340

Pos.	Cod.	Descrizione	Description	Description	Benennung	Descripcion
1	B07500217R	ET NON USARE GETTI..	DECAL DO NOT USE SPOUTS	DECAL NE PAS USER JETS	AUFKLEBE KEINE STRAHL BENUTZE	ET NO USAR CHORROS.
2	B07500214R	ET POMPETTA GRASSO	DECAL GREASE SQUIRT	DECAL PETITE POMPE GRAISSE	AUFKLEBE OELKAENNCHEN	ET BOMBA DE GRASA
3	B07500216R	ET GANCIO	DECAL HOOK	DECAL CROC	AUFKLEBE HACKEN	ET GANCHO
4	F20030505R	DECAL COPPIA SERRAG.TIM.EXT 2	TIGHTENING TORQUE LABEL EXT 2			DECAL PAR DE APRIETE.TIM.EXT 2
5	F20030503R	DECAL PNEUMATICI 3,5 BAR 230NM	DECAL TIRE 3,5 BAR 230NM			DECAL NEUM TICOS 3,5 BAR 230NM
6	B07500514R	ET COLT. BLOCC. SBLOCC.	DECAL KNIVES LOCK. UNBLOCK.	DECAL COUTEAUX BLOC. DEBLOC.	DECAL MESSERN	ET CUCHI. BLOQU. DESBLOQ.
7	B07500749R	ET AGGANCI IDRAULICI	HYDRAULIC LINKAGE DECAL	DECAL ATTELAGE HYDRAULIQUE	AUFKLEBER HYDR. KUPPLUNG	ET CONEXIONES HIDR ULICAS
8	B07500133R	ET TENDITORE AUTOMATICO	DECAL AUTOMATIC TIGHTNER	AUTOCOLLANT TENDEUR AUTOMATI	AUFKLEBER AUTOMATISCHER SPANN	ET TENSOR AUTOM TICO
9	B07500733R	ET BLOCCO RUOTA DX	DECAL BLOCK WHEEL	DECAL BLOC ROUE DROIT	AUFKLEBER BLOCKIERUNG RAD RECH	ET BLOQUEO RUEDA DER
10	B07500750R	ET BLOCCO RUOTA SX	DECAL BLOCK WHEEL	DECAL BLOC ROUE GAUCHE	AUFKLEBER BLOCKERUNG RAD LINKS	ET BLOQUEO RUEDA IZQ
11	B07500748R	ET MANOPOLA APERTO CHIUSO	DECAL KNOB OPEN CLOSE	DECAL BOUTON OUVERT FERME	AUFKLEBER HANDGRIFF OEFF. SCHL	ET MANDO ABIERTO CERRADO
12	B075P0018R	ET LEG.RETE CON 2 RULLI	DECAL NET WITH 2 ROLLER	DECAL LIAGE FILET AVEC 2 ROUL	AUFKL. NETZBIND. MIT 2 WALZEN	ET LIG.RED CON 2 RODILLOS
13	F20030502R	DECAL PNEUMATICI 2,6BAR 230NM	TIRES LABEL 2,6BAR 230NM			DECAL NEUM TICOS 2,6BAR 230NM
14	B07500513R	ET ROT. FOLLE	DECAL IDLE ROTOR	DECAL ROTOR FOU	DECAL LEER ROTOR	ET ROT. LOCO
15	B07500512R	ET MARCIA ROT.	DECAL ROTOR GEARSHIFT	DECAL ALLURE ROTOR	DECAL ROTOR GANGGETRIEBE	ET MARCHA DE LA ROT.

USATE SEMPRE RICAMBI ORIGINALI
ALWAYS USE ORIGINAL SPARE PARTS
IMMER DIE ORIGINAL-ERSATZTEILE VERWENDEN
***EMPLOYEZ TOUJOURS LES PIECES DE RECHANGE ORI*GINALES**
UTILIZAR SIEMPRE REPUESTOS ORIGINALES

Servizio Assistenza Tecnica - After Sales Service
Servizio Ricambi - Spare Parts Service

maschio.com

DEALER:

F 0 7 0 2 2 3 3 8

MASCHIO Fienagione S.p.A.
Sede legale Cremona
Via Bredina, 6 - 26100 Cremona (Italy)
Tel. +39 0372 564610
Fax +39 0372 564625
info@maschio.com

ООО МАСКИО-ГАСПАРДО РУССИЯ
404130, ВОЛЖСКИЙ,
ВОЛГОГРАДСКАЯ обл.,
УЛ. ПУШКИНА, 117 Б., РОССИЯ
TEL. +7 8443 203100
FAX +7 8443 203101
info@maschio.ru

MASCHIO GASPARDO Poland sp z.o.o.
Ul. Wapienna 6/8 - 87 – 100 Torun Poland
Tel. +48 56 6506051
Fax +48 56 6506053
www.gaspardo.pl

MASCHIO FRANCE Sarl
1, Rue de Mérignan ZA
F - 45240 La Ferte St. Aubin
France
Tel. +33 (0) 2.38.64.12.12
Fax +33 (0) 2.38.64.66.79
info@maschio.fr

MASCHIO-GASPARDO ROMANIA S.R.L.
Strada Înfrátirii, F.N.
315100 Chisineu-Cris (Arad) - România
Tel. +40 257 307030
Fax +40 257 307040
info@maschio.ro

MASCHIO GASPARDO NORTH AMERICA, Inc.
112 3rd Avenue East
Dewitt IA 52742 - USA
Tel. +1 563 6596400
Fax +1 563 6596405
info@maschio.us

MASCHIO IBERICA S.L.
MASCHIO DEUTSCHLAND GMBH
MASCHIO-GASPARDO UCRAINA
GASPARDO-MASCHIO TURCHIA
MASCHIO-GASPARDO CINA
MASCHIO-GASPARDO INDIA

Research & Development MASCHIO Fienagione S.p.A.